THIS DRAWING IS UNPUBLISHED. RELEASED FOR PUBLICATION -
© COPYRIGHT 20 BY - ALL RIGHTS RESERVED.

LOC	DIST
CM	00

REVISIONS

P	LTR	DESCRIPTION	DATE	DWN	APVD
	E3	REVISED PER ECR-12-008993	24MAY2012	KH	TM

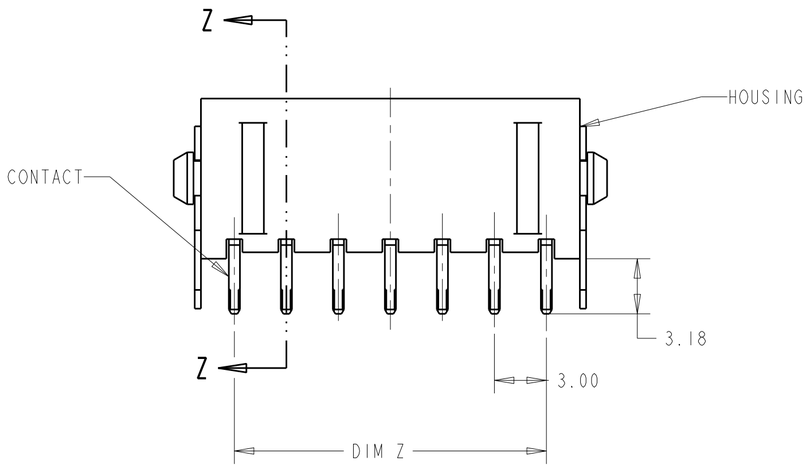

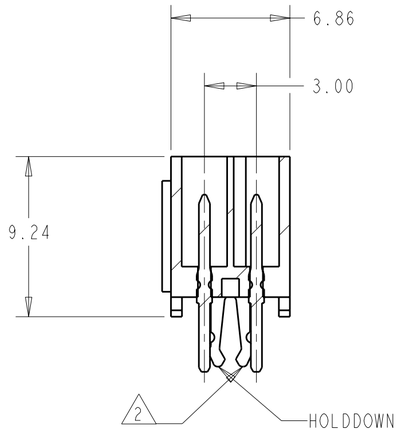

SECTION Z-Z

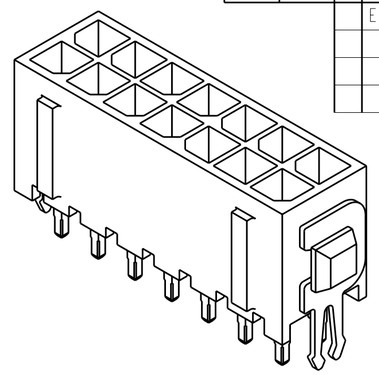

3 DIMENSIONAL MODEL

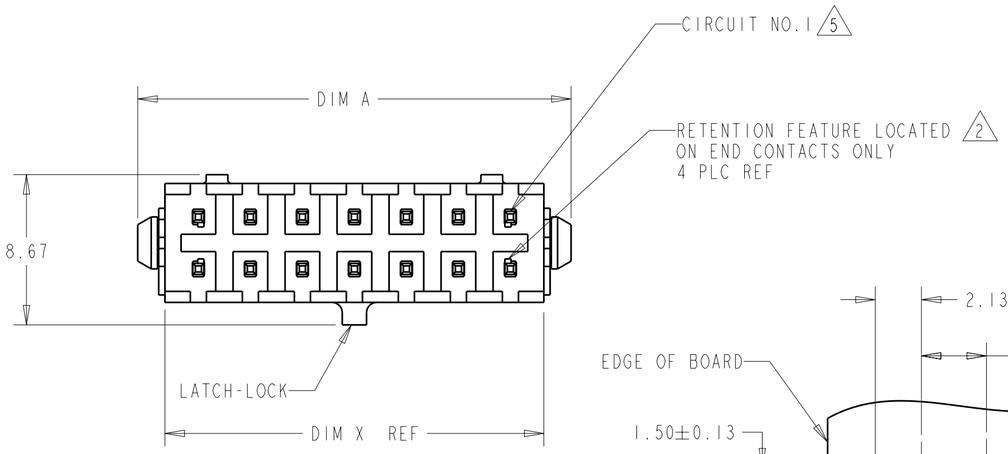

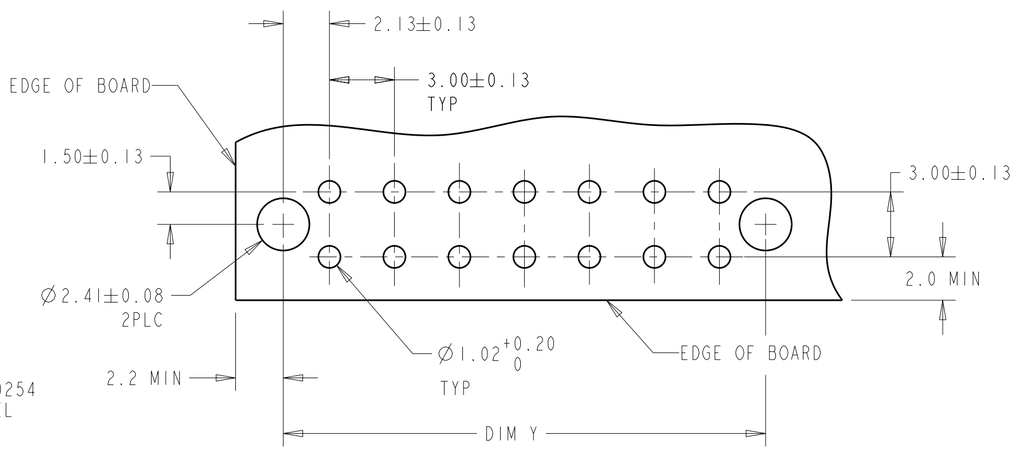

RECOMMENDED MOUNTING HOLE PATTERN 3
SCALE 5:1

FINISH	DIM A	DIM Z	DIM Y	DIM X	NO. OF POSN.	PART NUMBER
4	40.00	33.00	37.30	36.86	24	5-794682-4
4	37.00	30.00	34.30	33.86	22	5-794682-2
4	34.00	27.00	31.30	30.86	20	5-794682-0
4	31.00	24.00	28.30	27.86	18	4-794682-8
4	28.00	21.00	25.30	24.86	16	4-794682-6
4	25.00	18.00	22.30	21.86	14	4-794682-4
4	22.00	15.00	19.30	18.86	12	4-794682-2
4	19.00	12.00	16.30	15.86	10	4-794682-0
4	16.00	9.00	13.30	12.86	8	3-794682-8
4	13.00	6.00	10.30	9.86	6	3-794682-6
4	10.00	3.00	7.30	6.86	4	3-794682-4
4	7.00	-	4.30	3.86	2	3-794682-2
1	40.00	33.00	37.30	36.86	24	2-794682-4
1	37.00	30.00	34.30	33.86	22	2-794682-2
1	34.00	27.00	31.30	30.86	20	2-794682-0
1	31.00	24.00	28.30	27.86	18	1-794682-8
1	28.00	21.00	25.30	24.86	16	1-794682-6
1	25.00	18.00	22.30	21.86	14	1-794682-4
1	22.00	15.00	19.30	18.86	12	1-794682-2
1	19.00	12.00	16.30	15.86	10	1-794682-0
1	16.00	9.00	13.30	12.86	8	794682-8
1	13.00	6.00	10.30	9.86	6	794682-6
1	10.00	3.00	7.30	6.86	4	794682-4
1	7.00	-	4.30	3.86	2	794682-2

1 MATERIAL: HOUSING - NYLON, UL 94V-0, BLACK.
CONTACT - BRASS.
0.000762 MINIMUM GOLD OVER 0.00254
MINIMUM NICKEL ON MATING AREA. 0.00254
TIN-LEAD MINIMUM OVER 0.00254 NICKEL
MINIMUM ON SOLDER TAILS.
HOLDDOWNS: PHOSPHOR BRONZE, .00254 TIN-LEAD.

2 MAXIMUM INSERTION 30 LBS.

3 RECOMMENDED BOARD THICKNESS 1.57.

4 MATERIAL: HOUSING - NYLON, UL 94V-0, BLACK.
CONTACT - BRASS.
0.000762 MINIMUM GOLD OVER 0.00254
MINIMUM NICKEL ON MATING AREA. 0.00254
MATTE TIN MINIMUM OVER 0.00254 NICKEL
MINIMUM ON SOLDER TAILS.
HOLDDOWNS: PHOSPHOR BRONZE, .00254 MATTE TIN.

5 CIRCUIT NUMBER 1 IS LOCATED AT THE BOTTOM RIGHT
WITH THE LATCH-LOCK ON TOP LOOKING INTO THE CAVITIES

THIS DRAWING IS A CONTROLLED DOCUMENT.

DIMENSIONS: mm[INCHES]

TOLERANCES UNLESS OTHERWISE SPECIFIED:
0 PLC ±-
1 PLC ±-
2 PLC ±0.20[.008]
3 PLC ±-
4 PLC ±-
ANGLES ±-

MATERIAL: SEE TABLE
FINISH: SEE TABLE

DWN B. HAYMAKER 16AUG99
CHK K. COBLE 16AUG99
APVD K. COBLE 16AUG99
PRODUCT SPEC -
APPLICATION SPEC -
WEIGHT -

TE Connectivity

NAME: VERTICAL HEADER ASSEMBLY, THRU HOLE, 30 GOLD, DUAL ROW, MICRO MATE-N-LOK TM

SIZE A2 | CAGE CODE 00779 | DRAWING NO C-794682 | RESTRICTED TO -

CUSTOMER DRAWING | SCALE 4:1 | SHEET 1 OF 1 | REV E3

794682

1471-9 (3/11)

Pro/ENGINEER DRAWING