THIS DRAWING IS UNPUBLISHED. RELEASED FOR PUBLICATION – , – .
© COPYRIGHT – By – ALL RIGHTS RESERVED.

REVISIONS

P	LTR	DESCRIPTION	DATE	DWN	APVD
	E	REVISED PER ECO–16–011204	29 AUG 2016	AP	DG

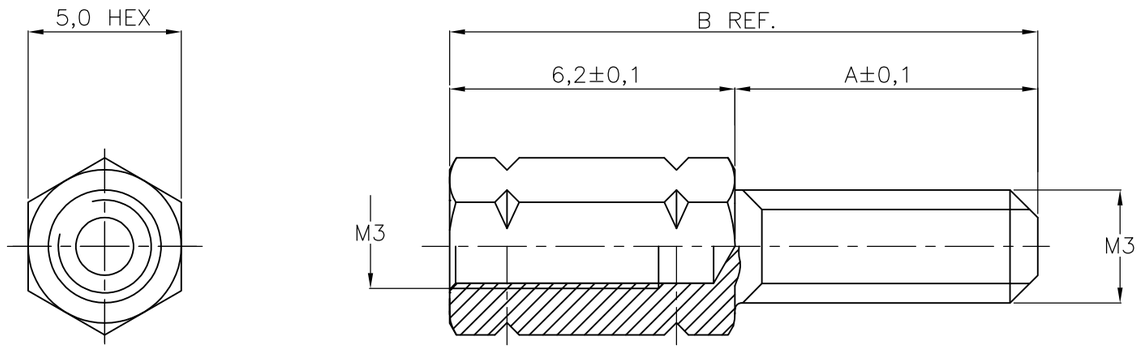

OBSOLETE	–	8,0	14,2	UNPLATED	ARCAP	4–829068–3
	–	8,0	14,2	TINPLATED	BRASS	4–829068–1
OBSOLETE	–	3,0	9,2	UNPLATED	ARCAP	3–829068–3
	–	3,0	9,2	TINPLATED	BRASS	3–829068–1
OBSOLETE	–	11,0	17,2	UNPLATED	ARCAP	2–829068–3
	–	11,0	17,2	TINPLATED	BRASS	2–829068–1
OBSOLETE	–	9,7	15,9	UNPLATED	ARCAP	1–829068–3
OBSOLETE	–	9,7	15,9	TINPLATED	BRASS	1–829068–1
OBSOLETE	–	5,0	11,2	UNPLATED	ARCAP	829068–3
	–	5,0	11,2	TINPLATED	BRASS	829068–1
	–	DIM "A"	DIM "B"	FINISH	MATERIAL	ORDER NUMBER

THIS DRAWING IS A CONTROLLED DOCUMENT.

DIMENSIONS: mm

TOLERANCES UNLESS OTHERWISE SPECIFIED:

0 PLC	± –
1 PLC	± 0,2
2 PLC	± –
3 PLC	± –
4 PLC	± –
ANGLES	± –

MATERIAL –

FINISH –

DWN D.KESSLER 02APR91
CHK C.V.TILBURG 23APR91
APVD L.V.SOEST 25APR91
PRODUCT SPEC —
APPLICATION SPEC —
WEIGHT 0.000000

TE Connectivity

NAME SCREWLOCK, FEMALE HD–SERIES
–
–

SIZE	CAGE CODE	DRAWING NO	RESTRICTED TO
A3	00779	C–829068	—

CUSTOMER DRAWING

SCALE	SHEET	REV
NTS	1 OF 1	E