THIS DRAWING IS UNPUBLISHED. RELEASED FOR PUBLICATION -,- .
© COPYRIGHT - BY TYCO ELECTRONICS CORPORATION. ALL RIGHTS RESERVED.

LOC	DIST
FT	0

REVISIONS

P	LTR	DESCRIPTION	DATE	DWN	APVD
	B	REVISED PER ECO-07-014969	6/25/07	SS	SRY

MATERIALS:
HOUSING: THERMOPLASTIC PA, UL94V-0, BLACK.
TERMINALS: BRIGHT TIN PLATED, COPPER ALLOY.
SCREWS: 6-32, STEEL, ZINC PLATED W/ CLEAR CHROMATE.

ELECTRICAL:
UL CLASS C: 20A, 150V.
UL CLASS D: 10A, 300V.
CSA TYPE B: 20A, 300V.
CSA TYPE C: 20A, 300V.
CSA TYPE D: 10A, 300V.
CSA TYPE E: 20A, 300V.
WIRE RANGE: 12-22 AWG

MECHANICAL:
OPERATING TEMP.: -40° TO +105°C
RECOMMENDED TIGHTENING TORQUE: 7 IN-LBS.

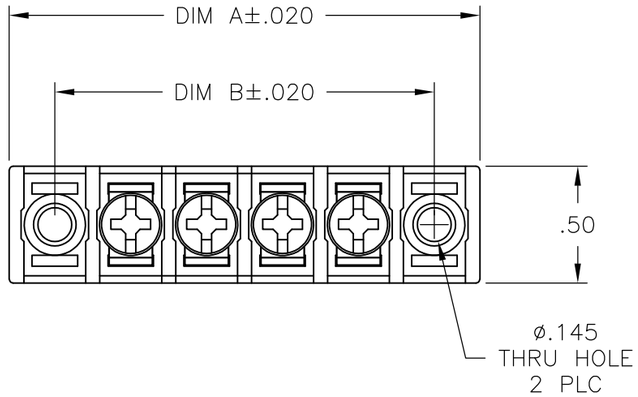

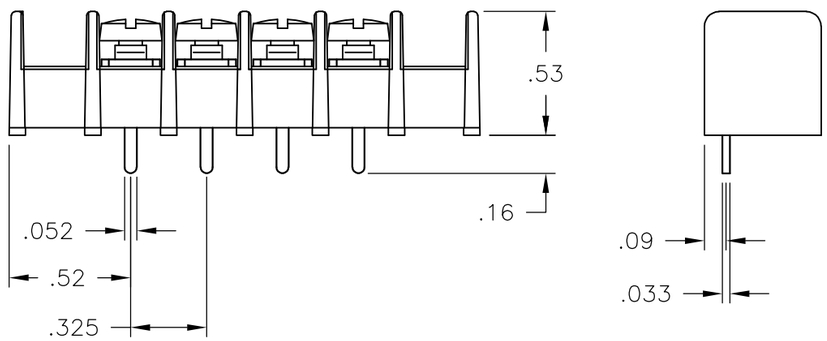

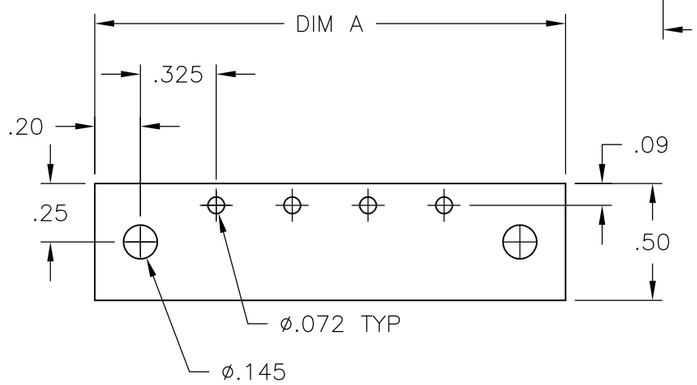

RECOMMENDED PCB LAYOUT

DIM B	DIM A	NO OF POS	CATALOG NUMBER	TYCO PART NO.
9.425	9.815	28	4DB-P207-28	2-1546465-8
9.100	9.490	27	4DB-P207-27	2-1546465-7
8.775	9.165	26	4DB-P207-26	2-1546465-6
8.450	8.840	25	4DB-P207-25	2-1546465-5
8.125	8.515	24	4DB-P207-24	2-1546465-4
7.800	8.190	23	4DB-P207-23	2-1546465-3
7.475	7.865	22	4DB-P207-22	2-1546465-2
7.150	7.540	21	4DB-P207-21	2-1546465-1
6.825	7.215	20	4DB-P207-20	2-1546465-0
6.500	6.890	19	4DB-P207-19	1-1546465-9
6.175	6.565	18	4DB-P207-18	1-1546465-8
5.850	6.240	17	4DB-P207-17	1-1546465-7
5.525	5.915	16	4DB-P207-16	1-1546465-6
5.200	5.590	15	4DB-P207-15	1-1546465-5
4.875	5.265	14	4DB-P207-14	1-796658-0
4.550	4.940	13	4DB-P207-13	1-1546465-3
4.225	4.615	12	4DB-P207-12	1-1546465-2
3.900	4.290	11	4DB-P207-11	1-1546465-1
3.575	3.965	10	4DB-P207-10	1-1546465-0
3.250	3.640	9	4DB-P207-09	1546465-9
2.925	3.315	8	4DB-P207-08	1546465-8
2.600	2.990	7	4DB-P207-07	1546465-7
2.275	2.665	6	4DB-P207-06	5-1437667-9
1.950	2.340	5	4DB-P207-05	5-1437667-8
1.625	2.015	4	4DB-P207-04	5-1437667-7
1.300	1.690	3	4DB-P207-03	5-1437667-6
.975	1.365	2	4DB-P207-02	1546465-2

THIS DRAWING IS A CONTROLLED DOCUMENT.

DIMENSIONS: INCHES

TOLERANCES UNLESS OTHERWISE SPECIFIED:
0 PLC ± -
1 PLC ± -
2 PLC ± .01
3 PLC ± .005
4 PLC ± -
ANGLES ± 2°

MATERIAL -
FINISH -

DWN S SCHLEGEL 10/20/06
CHK S YODER 10/20/06
APVD S YODER 10/20/06
PRODUCT SPEC —
APPLICATION SPEC —
WEIGHT —

Tyco Electronics
Tyco Electronics Corporation
Harrisburg, PA 17105-3608

NAME
4DB SERIES
P207 STYLE
—

SIZE	CAGE CODE	DRAWING NO	RESTRICTED TO
A3	00779	C-5-1437667-6	—

CUSTOMER DRAWING
SCALE NTS
SHEET 1 OF 1
REV B