THIS DRAWING IS UNPUBLISHED. RELEASED FOR PUBLICATION -,- .
© COPYRIGHT - By - ALL RIGHTS RESERVED.

REVISIONS

P	LTR	DESCRIPTION	DATE	DWN	APVD
	G3	REVISED PER ECO-14-009348	20JUN2014	NK	DR
	G4	REVISED PER ECO-17-007400	29NOV2017	RS	DR

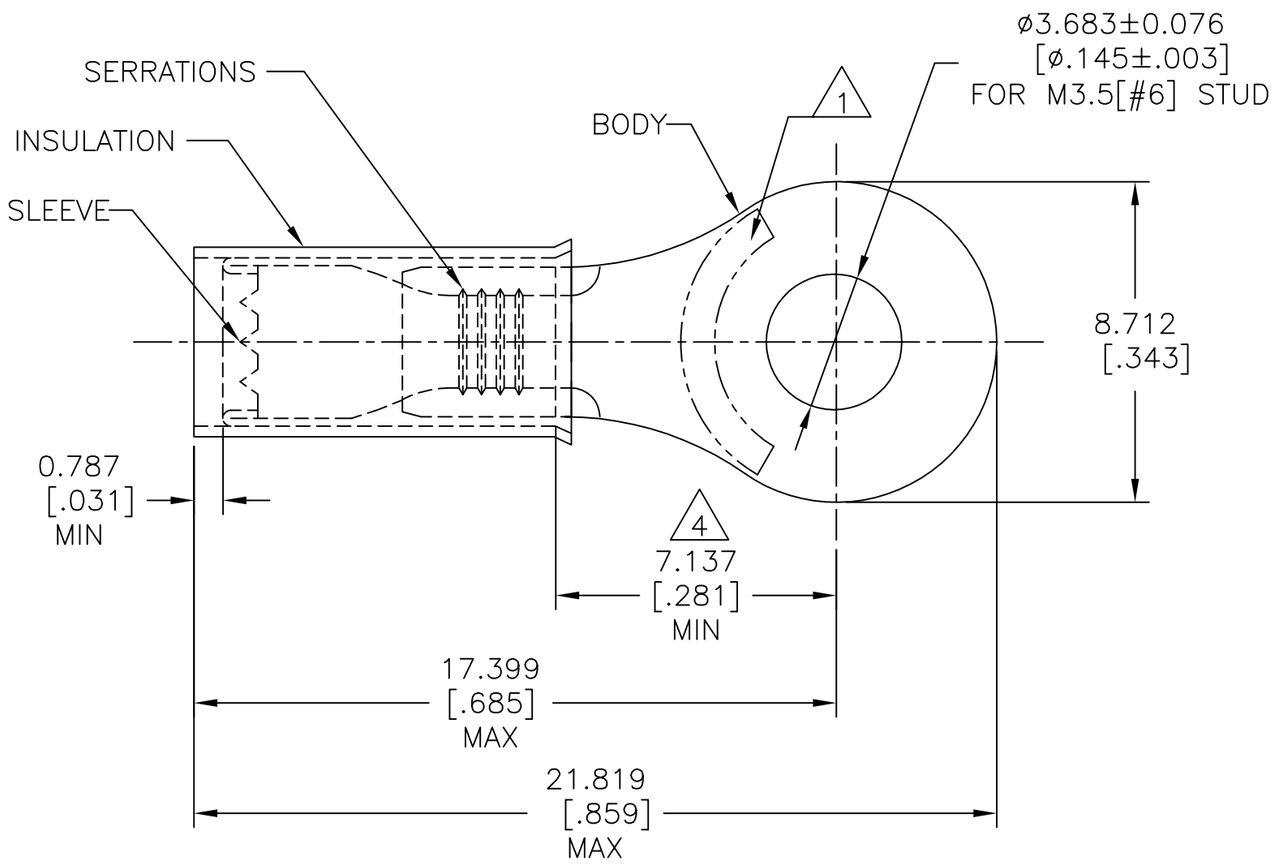

AMP WIRE RANGE	UL Listed FILE E13288	CSA LR7189 Certified
16-14 AWG SOLID OR STRANDED	16-14 AWG SOLID OR STRANDED	16-14 AWG SOLID OR STRANDED

1. STAMP AMP 16-14* APPROX AS SHOWN MAY BE ON TOP OR BOTTOM.
2. FOR ø2.667-3.810[ø.105-.150] WIRE INSULATION.
3. BODY MATERIAL THK IS 0.787±0.051[.031±.002]
4. APPLIES FROM EDGE OF METAL WIRE BARREL TO CENTER OF STUD HOLE.
5. MATERIAL:
   BODY & SLEEVE : COPPER PER ASTM B152
   INSULATION : NYLON.
6. FINISH:
   BODY & SLEEVE : TIN PLATE PER ASTM B545
   INSULATION : COLOR-BLUE.

QTY	DESCRIPTION	PART NO
5000	ON TAPE	2-36157-2
1000	LOOSE PIECE	36157

AMP INCORPORATED
CUSTOMER SERVICE SYSTEMS

FOR ADDITIONAL PRODUCT INFORMATION OR COPIES OF DRAWINGS AND TECHNICAL DOCUMENTS	PRODUCT INFORMATION CENTER 1-800-522-6752
FOR APPLICATION TOOLING INFORMATION	TOOLING ASSISTANCE CENTER 1-800-722-1111
FOR ORDER ENTRY	1-800-526-5142

THIS DRAWING IS A CONTROLLED DOCUMENT FOR AMP INCORPORATED. IT IS SUBJECT TO CHANGE AND THE CONTROLLING ENGINEERING ORGANIZATION SHOULD BE CONTACTED FOR THE LATEST REVISION.

MAX RECOMMENDED OPERATING TEMPERATURE: 105°C [221°F]

VOLTAGE RATING: 300 V MAX

CIRCULAR MIL AREA: 1.04-2.62mm² [2,050-5,180] SOLID OR STRANDED

THIS DRAWING IS A CONTROLLED DOCUMENT.

DIMENSIONS: mm [INCHES]

TOLERANCES UNLESS OTHERWISE SPECIFIED:
0 PLC ± -
1 PLC ± -
2 PLC ± -
3 PLC ± 0.127[.005]
4 PLC ± -
ANGLES ± 5°

MATERIAL 5

FINISH 6

DWN	jr ruth	17MAR09
CHK	TOM MICHIELUTTI	17MAR09
APVD	TOM MICHIELUTTI	17MAR09
PRODUCT SPEC	UL 486 A-B	
APPLICATION SPEC	114-2157	
WEIGHT	-	

TE Connectivity

NAME: TERMINAL, PIDG
RING TONGUE, WIRE SIZE 16-14 AWG

SIZE	CAGE CODE	DRAWING NO	RESTRICTED TO
A3	00779	C-36157	-

CUSTOMER DRAWING | SCALE 8:1 | SHEET 1 OF 1 | REV G4

1470-19 (1/15)