THIS DRAWING IS UNPUBLISHED. RELEASED FOR PUBLICATION –,– .
© COPYRIGHT – By – ALL RIGHTS RESERVED.

LOC	DIST
G	14

REVISIONS

P	LTR	DESCRIPTION	DATE	DWN	APVD
	K1	REVISED PER ECO–11–004587	11MAR11	RK	HMR

AMP WIRE RANGE	Listed	LR7189 Certified
22–16 AWG SOLID OR STRANDED	22–16 AWG SOLID OR STRANDED	22–16 AWG SOLID OR STRANDED

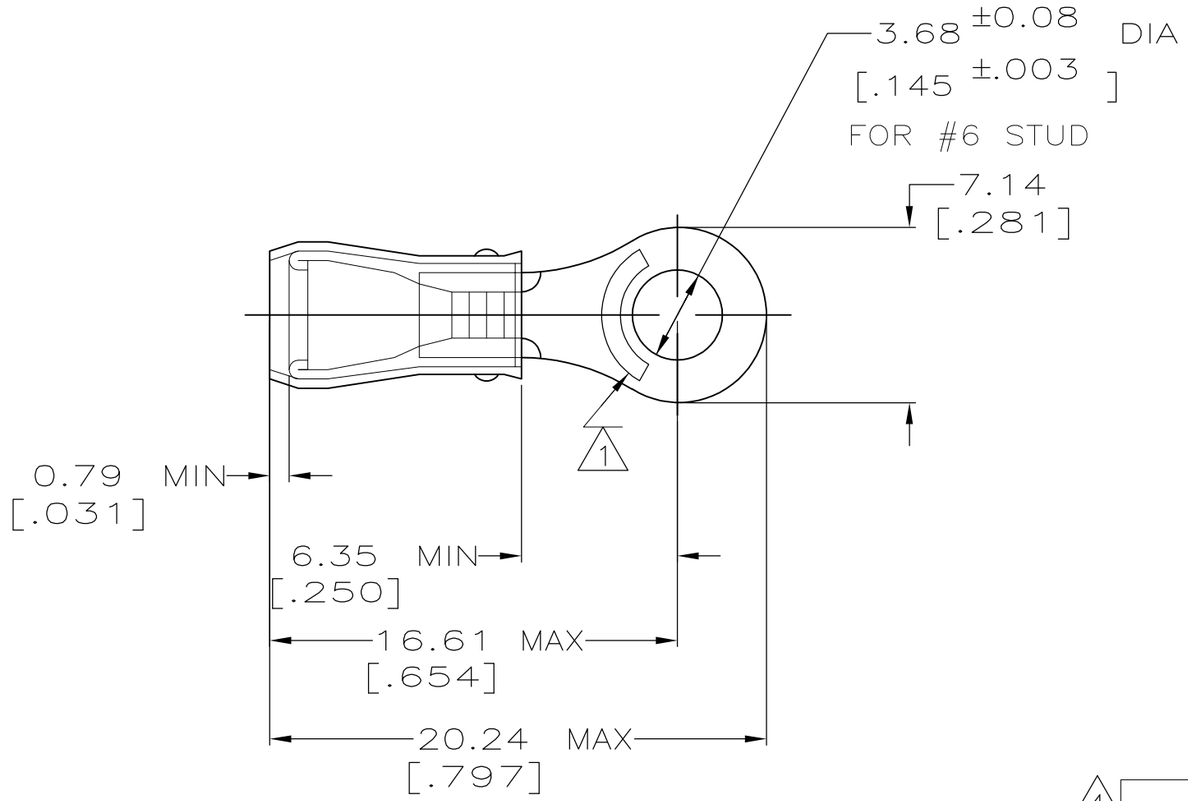

1. STAMP AMP 22–18* APPROX AS SHOWN 22–16 TERMINALS ARE STAMPED 22–18 IN ACCORDANCE WITH MILITARY SPEC MIL–T–7928 COMMERCIAL WIRE RANGE IS 22–16
2. WIRE INSULATION DIA: .105 – .140
3. TONGUE MATERIAL THK: 0.79 ±0.05 [.031 ±.002]
4. SUPERSEEDED BY 8–36152–1

MILITARY P/N AND CLASS	QUANTITY	PACKAGE TYPE	PART NO
~~– –~~	~~5~~	~~LOOSE PIECE,BLS~~	~~8–36152–4~~
~~– –~~	~~50~~	~~LOOSE PIECE, BAG~~	~~8–36152–5~~
– –	100	LOOSE PIECE, BOX	8–36152–1
– –	5000	ON TAPE, REEL	2–36152–1
– –	–	LOOSE PIECE	36152

AMP INCORPORATED
CUSTOMER SERVICE SYSTEMS

FOR ADDITIONAL PRODUCT INFORMATION OR COPIES OF DRAWINGS AND TECHNICAL DOCUMENTS	PRODUCT INFORMATION CENTER 1–800–522–6752
FOR APPLICATION TOOLING INFORMATION	TOOLING ASSISTANCE CENTER 1–800–722–1111
FOR ORDER ENTRY	1–800–526–5142

MAX RECOMMENDED OPERATING TEMPERATURE: 105° C MAX

VOLTAGE RATING: 300 V MAX

WIRE CROSS SECTIONAL AREA RANGE: 0.26–1.65mm² [509–3,260] CIR MILS SOLID OR STRANDED

THIS DRAWING IS A CONTROLLED DOCUMENT FOR AMP INCORPORATED. IT IS SUBJECT TO CHANGE AND THE CONTROLLING ENGINEERING ORGANIZATION SHOULD BE CONTACTED FOR THE LATEST REVISION.

THIS DRAWING IS A CONTROLLED DOCUMENT.

DIMENSIONS: INCHES

TOLERANCES UNLESS OTHERWISE SPECIFIED:
0 PLC ± –
1 PLC ± –
2 PLC ± 0.20[.008]
3 PLC ± –
4 PLC ± –
ANGLES ± –

MATERIAL: COPPER ASTM B–152 SLEEVE, RED NYLON

FINISH: TIN PLATE PER ASTM B545

DWN	DK SCHRUM	02/11/93
CHK	RE HERSEY	4/28/93
APVD	ML ELLIS	4/28/93
PRODUCT SPEC	UL 486A	
APPLICATION SPEC	NOT AVAILABLE	
WEIGHT	–	

TE Connectivity

NAME: TERMINAL, RING TONGUE, PIDG™, WIRE SIZE: 22–16 AWG

SIZE	CAGE CODE	DRAWING NO	RESTRICTED TO
A3	00779	C–36152	–

CUSTOMER DRAWING | SCALE 4:1 | SHEET 1 OF 1 | REV K1

1470–19 (3/11)