THIS DRAWING IS UNPUBLISHED. RELEASED FOR PUBLICATION -,- .
© COPYRIGHT - By - ALL RIGHTS RESERVED.

LOC	DIST
AF	50

REVISIONS

P	LTR	DESCRIPTION	DATE	DWN	APVD
	L3	REVISED PER ECO-14-015577	15OCT14	JR	DH

6 OBSOLETE PARTS: OBSOLETE CIS STREAMLINING PER D.RENAUD/D.SINISI

7 CUSTOMER SPECIAL PACKAGING AND LABELING

1 PRODUCT PROVIDED IN STRIP FORM ON REELS, BREAKS MAY BE PRESENT.

3 CRIMP WIDTH, .110 F TYPE
CRIMP HEIGHT (±.002) = (TOTAL CMA + 11,300) / 176,700

4 PRELIMINARY – NOT FOR PRODUCTION.

5 WIRE RANGE FOR NEW APPLICATIONS: 1500–5000 CMA (WIRE RANGE APPROVED FOR APPLICATIONS IMPLEMENTED PRIOR TO 2005: 1970–4940 CMA).

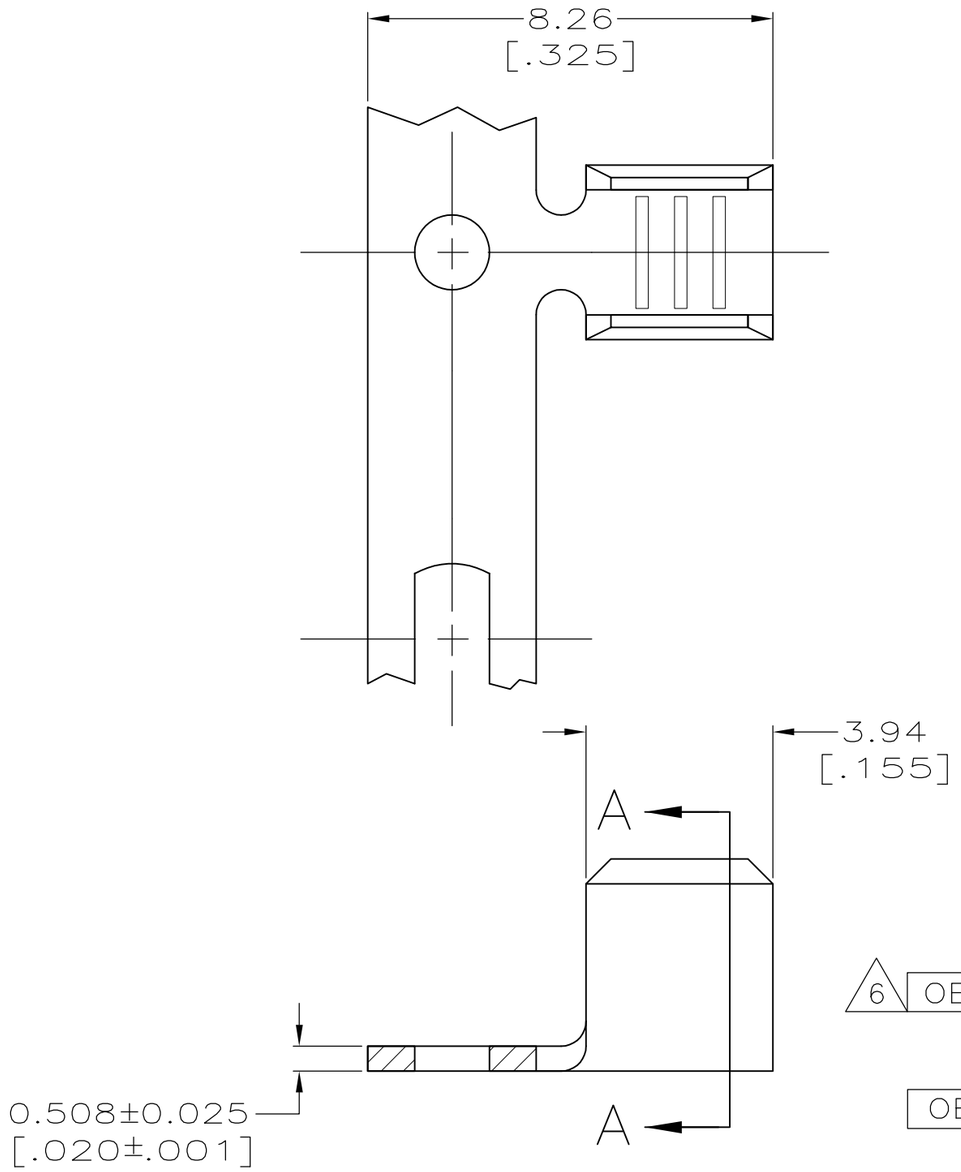

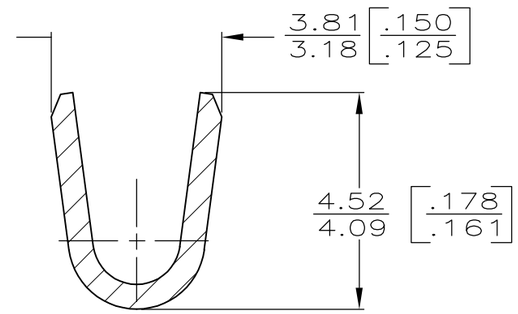

SECTION A–A
SCALE 10:1

	MATERIAL	FINISH	REELING	WIRE RANGE	PART NUMBER
7	BRASS	TIN	REVERSE	– –	4 63130–9
	STEEL	NICKEL			4 63130–8
	COPPER–NICKEL	NONE			4 63130–7
6 OBSOLETE	PHOS BRONZE	TIN			5 ~~63130–4~~
	BRASS				63130–3
		NONE			3 63130–2
OBSOLETE			~~STANDARD~~		~~63130–1~~

THIS DRAWING IS A CONTROLLED DOCUMENT.

DIMENSIONS: INCHES

TOLERANCES UNLESS OTHERWISE SPECIFIED:

0 PLC	± –
1 PLC	± –
2 PLC	± 0.25 [.010]
3 PLC	± –
4 PLC	± –
ANGLES	± –

MATERIAL: SEE TABLE

FINISH: SEE TABLE

DWN PHILLIP M FORTNEY 17/JAN/96
CHK JEFF R RUTH 17/JAN/96
APVD DENNIS SCHWENK 17/JAN/96
PRODUCT SPEC –
APPLICATION SPEC 114–2088
WEIGHT –

TE Connectivity

NAME – SPLICE –

SIZE	CAGE CODE	DRAWING NO	RESTRICTED TO
A3	00779	C-63130	–

CUSTOMER DRAWING | SCALE 8:1 | SHEET 1 OF 1 | REV L3

1470–19 (3/11)