PRODUCT NO.
10035388-XXX__ NOTE:5

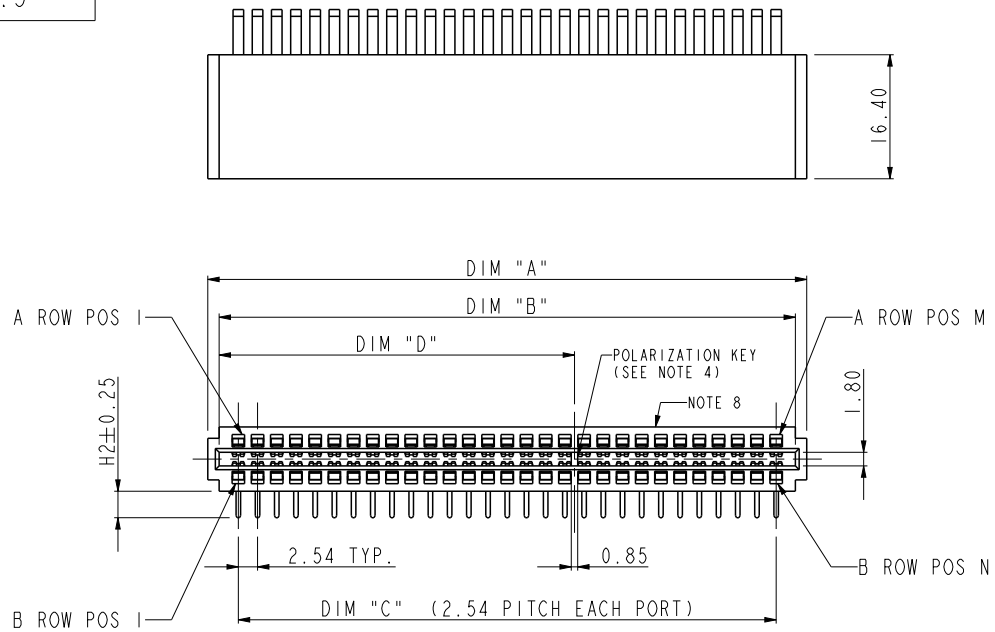

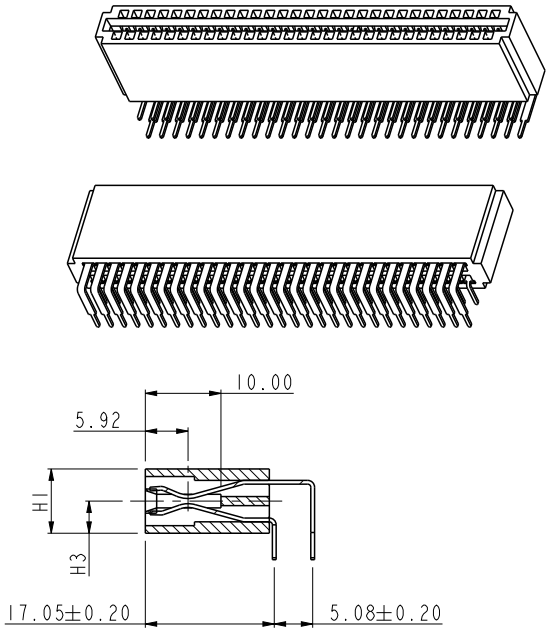

NOTE:
1. MATERIAL:
   HOUSING: HIGH TEMPERATURE THERMOPLASTIC, UL 94 V-O RATED, BLACK.
   TERMINAL: HIGH CONDUCTIVITY COPPER ALLOY.
2. PRODUCT SPECIFICATION: GS-12-259.
3. PACKAGE SPECIFICATION: GS-14-937
4. THERE IS NO POLARIZATION KEY IN 10035388-102/103/104/105/106/107/202/203/205/500 -700/800/802/902/903/904/905/909/910/911/912.
5. PLATING SPEC:
   10035388-XXX:
   POWER PIN: CONTACT AREA - 30u" GOLD OVER 50u" NICKEL UNDER PLATED.
   SOLDER TAIL - 100u" TIN/LEAD OVER 50u" NICKEL UNDER PLATED.
   AC TERMINAL: 50u" NICKEL UNDER PLATED; 30u" GOLD ON CONTACT AREA.
   10035388-XXXLF:
   POWER PIN: CONTACT AREA - 30u" GOLD OVER 50u" NICKEL UNDER PLATED.
   SOLDER TAIL - 100u" PURE MATTE TIN OVER 50u" NICKEL UNDER PLATED.
   AC TERMINAL: 50u" NICKEL UNDER PLATED; 30u" GOLD ON CONTACT AREA.
6. P/N 10035388-XXXLF MEETS EUROPEAN UNION DIRECTIVE AND OTHER COUNTRY REGULATIONS AS DESCRIBED IN GS-22-008.
7. THE HOUSING WILL WITHSTAND EXPOSURE TO 260°C PEAK TEMPERATURE FOR 10 SECONDS IN A WAVE SOLDER APPLICATION WITH A CIRCUIT BOARD.
8. MANUFACTURER'S NAME, P/N AND DATE CODE TO APPEAR ON THIS SURFACE AS PER GS-24-007.
9. A △1 SYMBOL WILL BE NEXT TO ANY DIMENSION, VIWE, OR NOTE WHICH HAS BEEN MODIFIED WITH THE CURRENT DRAWING REVISION.

spec ref	*	dr	De-Ming Lu	2014/08/06	projection	MM	size A4 / scale 1:1
tolerance std: ISO 406, ISO 1101	TOLERANCES UNLESS OTHERWISE SPECIFIED	eng	Sunny2 Liu	2015/08/11			ecn no ELX-DG-21633-1
		chr	Terris Liu	2015/08/13			
		appr	Pei-Ming Zheng	2015/08/13	product family	Power edge card	rel level Released
surface ✓ ISO 1302	linear 0.X ±0.5; 0.XX ±0.25; 0.XXX ±0.10; angular 0° ±2°	FCI www.fci.com	title: POWER EDGE CARD CONNECTOR WITHOUT SIGNAL ASSY		dwg no 10035388		rev AE
			cat. no. -		Product - Customer Drw		sheet 1 of 6

Copyright FCI.

PRODUCT NO.
10035388-600__ NOTE:5

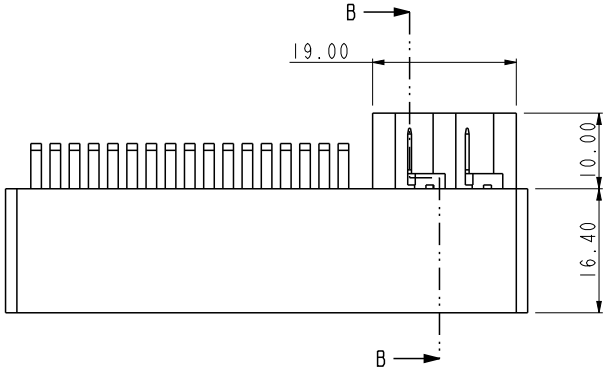

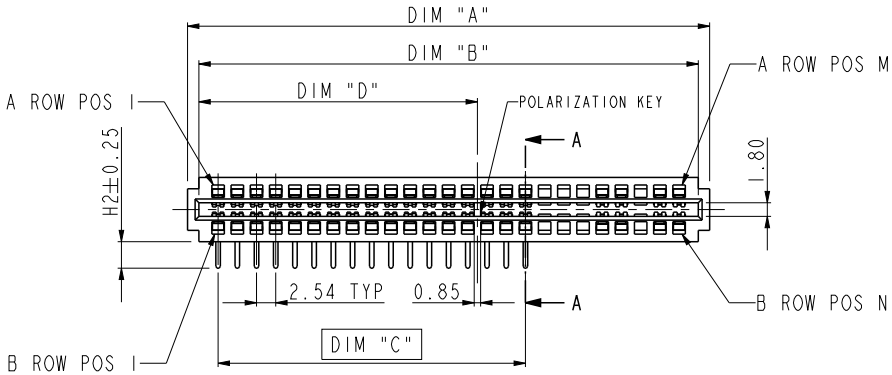

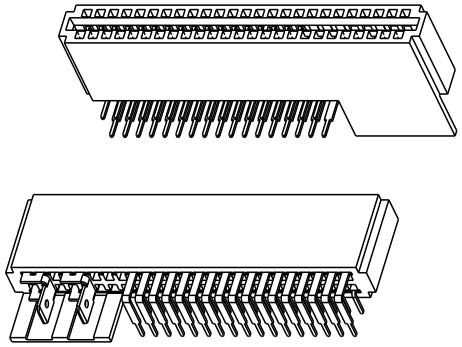

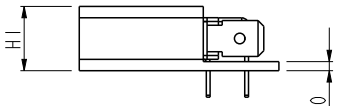

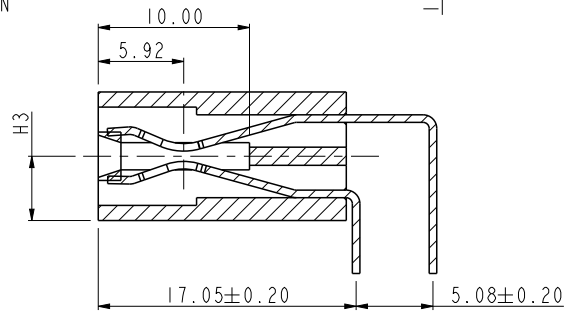

SECTION A-A
SCALE 2:1

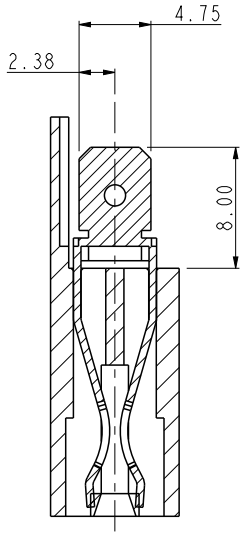

SECTION B-B
SCALE 2:1

NOTE:
(APPLY TO 10035388-600__ AS ADDITIONAL)

10. THE EMPTY POSITIONS ARE 18, 19, 20, 23.
11. THERE ARE 2 AC TERMINALS.

dr	De-Ming Lu	2014/08/06	projection	MM	size A4 / scale 1:1
eng	Sunny2 Liu	2015/08/11			
chr	Terris Liu	2015/08/13			ecn no ELX-DG-21633-1
appr	Pei-Ming Zheng	2015/08/13	product family	Power edge card	rel level **Released**
FCI	title POWER EDGE CARD CONNECTOR WITHOUT SIGNAL ASSY		dwg no 10035388		rev **AE**
www.fci.com	cat. no. -		Product - Customer Drw		sheet 2 of 6

Copyright FCI.

Pro/E File - REV C - 2009-06-09

PRODUCT NO.
10035388-XXX__ NOTE:5

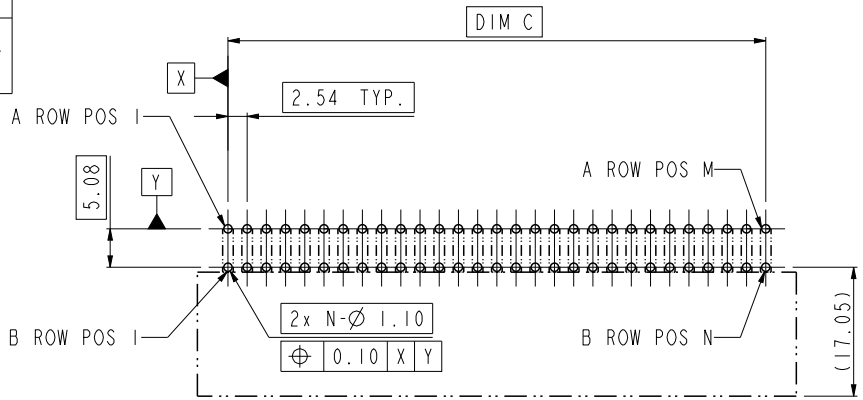

RECOMMENDED PCB LAYOUT

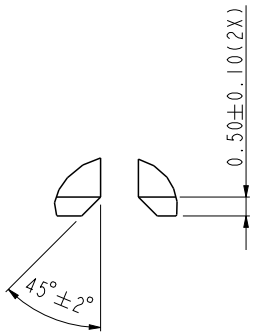

DETAIL B
SCALE 5:1

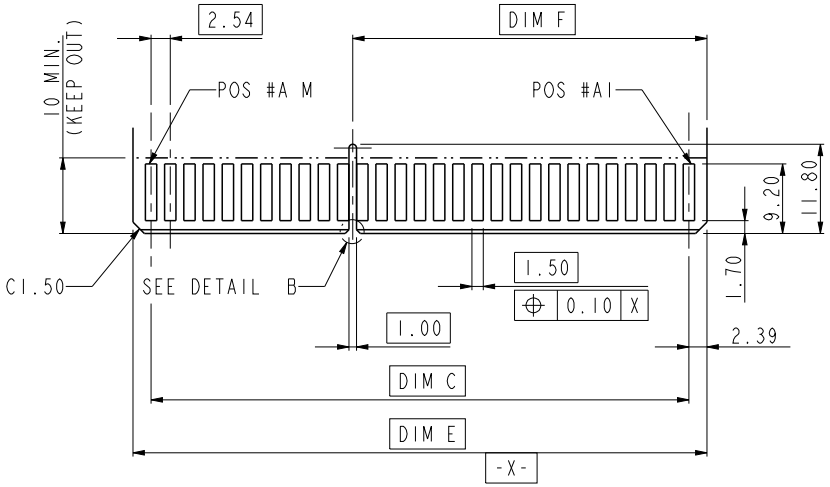

RECOMMENDED DAUGHTER CARD LAYOUT (TOP SIDE)

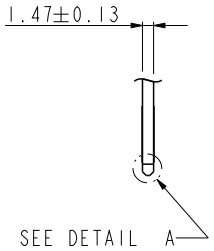

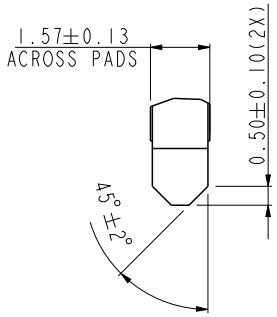

DETAIL A
SCALE 5:1

dr	De-Ming Lu	2014/08/06	projection	MM	size A4 / scale 1:1
eng	Sunny2 Liu	2015/08/11			
chr	Terris Liu	2015/08/13			ecn no ELX-DG-21633-1
appr	Pei-Ming Zheng	2015/08/13	product family	Power edge card	rel level **Released**

FCI	title: POWER EDGE CARD CONNECTOR WITHOUT SIGNAL ASSY	dwg no 10035388	rev **AE**
www.fci.com	cat. no. -	Product - Customer Drw	sheet 3 of 6

Copyright FCI.

Pro/E File - REV C - 2009-06-09

PRAT NO.	DIM"A"	DIM"B"	DIM"C"	DIM"D"	DIM"E"	DIM"F"	H1	H2	H3	PIN CONFIGURATION	M	N
10035388-000 10035388-000LF	79.20	76.20	71.12	46.99	75.90	46.84	8.50	3.50	4.25	ALL LOADED	29	29
10035388-001 10035388-001LF	79.20	76.20	71.12	46.99	75.90	46.84	8.50	3.50	4.25	A1 A29 B1 B29	29	29
10035388-100 10035388-100LF	69.04	66.04	60.96	36.83	65.74	36.68	8.50	3.50	4.25	ALL LOADED	25	25
10035388-101 10035388-101LF	69.04	66.04	60.96	36.83	65.74	36.68	8.50	3.50	4.25	A1 A25 B1 B25	25	25
10035388-102 10035388-102LF	69.04	66.04	60.96	N/A	65.74	N/A	8.50	3.50	4.25	ALL LOADED	25	25
10035388-103 10035388-103LF	69.04	66.04	60.96	N/A	65.74	N/A	8.50	3.50	4.25	A1 A25 B1 B25	25	25
10035388-104 10035388-104LF	69.04	66.04	60.96	N/A	65.74	N/A	8.50	3.50	4.25	A1 A25 B1 B25	25	25
10035388-105 10035388-105LF	69.04	66.04	60.96	N/A	65.74	N/A	8.50	3.50	4.25	A1 A25 B1 B25	25	25
10035388-106 10035388-106LF	69.04	66.04	60.96	N/A	65.74	N/A	9.287	2.713	5.037	ALL LOADED	25	25
10035388-200 10035388-200LF	84.28	81.28	76.20	52.07	80.98	51.92	8.50	3.50	4.25	ALL LOADED	31	31
10035388-201 10035388-201LF	84.28	81.28	76.20	52.07	80.98	51.92	8.50	3.50	4.25	A1 A31 B1 B31	31	31
10035388-202 10035388-202LF	84.28	81.28	76.20	N/A	80.98	N/A	8.50	3.50	4.25	ALL LOADED	31	31
10035388-203 10035388-203LF	84.28	81.28	76.20	N/A	80.98	N/A	8.50	3.50	4.25	A1 A31 B1 B31	31	31
10035388-205 10035388-205LF	94.44	91.44	86.36	N/A	91.14	N/A	8.50	3.50	4.25	A1 A35 B1 B35	35	35
10035388-300 10035388-300LF	86.82	83.82	78.74	54.61	83.52	54.46	8.50	3.50	4.25	ALL LOADED	32	32
10035388-301 10035388-301LF	86.82	83.82	78.74	54.61	83.52	54.46	8.50	3.50	4.25	A1 A32 B1 B32	32	32

Copyright FCI.

dr	De-Ming Lu	2014/08/06
eng	Sunny2 Liu	2015/08/11
chr	Terris Liu	2015/08/13
appr	Pei-Ming Zheng	2015/08/13

projection

MM

size A4 — scale 1:1

ecn no ELX-DG-21633-1

product family Power edge card

rel level **Released**

www.fci.com

title POWER EDGE CARD CONNECTOR WITHOUT SIGNAL ASSY

dwg no 10035388

rev **AE**

cat. no. -

Product - Customer Drw

Pro/E File - REV C - 2009-06-09

PRAT NO.	DIM"A"	DIM"B"	DIM"C"	DIM"D"	DIM"E"	DIM"F"	H1	H2	H3	PIN CONFIGURATION	M	N
10035388-400 10035388-400LF	61.42	58.42	53.34	29.21	58.12	29.06	8.50	3.50	4.25	ALL LOADED	22	22
10035388-500 10035388-500LF	76.66	73.66	68.58	N/A	73.36	N/A	8.50	3.50	4.25	ALL LOADED	28	28
10035388-600 10035388-600LF	69.04	66.04	40.64	36.83	65.74	36.68	8.50	3.50	4.25	A1 … A25 B1 … B25	25	25
10035388-700 10035388-700LF	86.82	83.82	78.74	N/A	83.52	N/A	8.50	3.50	4.25	ALL LOADED	32	32
10035388-800 10035388-800LF	48.72	45.72	40.64	N/A	45.42	N/A	8.50	3.50	4.25	ALL LOADED	17	17
10035388-802 10035388-802LF	48.72	45.72	40.64	N/A	45.42	N/A	8.50	3.50	4.25	A1 … A17 B1 … B17	17	17
10035388-900 10035388-900LF	41.10	38.10	33.02	26.67	37.80	26.52	8.50	3.50	4.25	ALL LOADED	14	14
10035388-903 10035388-903LF	94.44	91.44	86.36	N/A	91.14	N/A	8.50	3.50	4.25	A1 … A35 B1 … B35	35	35
10035388-904 10035388-904LF	94.44	91.44	86.36	N/A	91.14	N/A	8.50	3.50	4.25	A1 … A35 B1 … B35	35	35
10035388-905 10035388-905LF	94.44	91.44	86.36	N/A	91.14	N/A	8.50	3.50	4.25	ALL LOADED	35	35
10035388-907 10035388-907LF	53.80	50.80	45.72	26.27	50.50	26.52	8.50	3.50	4.25	ALL LOADED	19	19
10035388-908 10035388-908LF	61.42	58.42	53.34	29.21	58.12	29.36	8.50	3.50	4.25	A1 … A22 B1 … B22	22	22
10035388-909 10035388-909LF	48.72	45.72	40.64	N/A	45.42	N/A	8.50	3.50	4.25	A1 … A17 B1 … B17	17	17
10035388-910 10035388-910LF	94.44	91.44	86.36	N/A	91.14	N/A	8.50	3.50	4.25	A1 … A35 B1 … B35	35	35
10035388-911 10035388-911LF	53.80	50.80	45.72	N/A	50.50	N/A	8.50	3.50	4.25	ALL LOADED	19	19
10035388-912 10035388-912LF	41.10	38.10	33.02	N/A	37.80	N/A	8.50	3.50	4.25	A1 … A14 B1 … B14	14	14

Copyright FCI.

dr	De-Ming Lu	2014/08/06	projection	MM
eng	Sunny2 Liu	2015/08/11	size A4	scale 1:1
chr	Terris Liu	2015/08/13	ecn no	ELX-DG-21633-1
appr	Pei-Ming Zheng	2015/08/13	product family Power edge card	rel level **Released**
www.fci.com	title POWER EDGE CARD CONNECTOR WITHOUT SIGNAL ASSY	dwg no 10035388	rev **AE**	
	cat. no. -	Product - Customer Drw	sheet 5 of 6	

PRAT NO.	DIM"A"	DIM"B"	DIM"C"	DIM"D"	DIM"E"	DIM"F"	H1	H2	H3	PIN CONFIGURATION	M	N
10035388-107 10035388-107LF	69.04	66.04	60.96	N/A	65.74	N/A	8.50	3.50	4.25	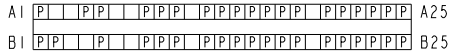	25	25
10035388-913 10035388-913LF	25.86	22.86	17.78	N/A	22.56	N/A	8.50	3.50	4.25	ALL LOADED	8	8
10035388-902 10035388-902LF	94.44	91.44	86.36	N/A	91.14	N/A	8.50	3.50	4.25	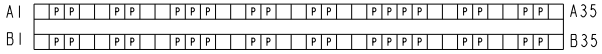	35	35
10035388-108 10035388-108LF	69.04	66.04	60.96	N/A	65.74	N/A	8.50	3.50	4.25	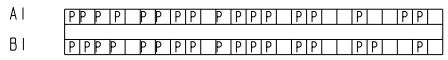	25	25
AE 10035388-206 10035388-206LF	84.28	81.28	76.20	N/A	80.98	N/A	8.50	3.50	4.25	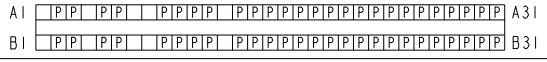	31	31

dr	De-Ming Lu	2014/08/06	projection	MM	size A4 / scale 1:1
eng	Sunny2 Liu	2015/08/11			ecn no ELX-DG-21633-1
chr	Terris Liu	2015/08/13			
appr	Pei-Ming Zheng	2015/08/13	product family	Power edge card	rel level Released

title: POWER EDGE CARD CONNECTOR
WITHOUT SIGNAL ASSY

dwg no: 10035388

rev: AE

www.fci.com

cat. no. -

Product - Customer Drw

sheet 6 of 6

Copyright FCI.

Pro/E File - REV C - 2009-06-09