CASE FINISH	CURRENT (AMPS)	WORKING VOLTAGE				MAXIMUM DC RESISTANCE (OHMS)	MAXIMUM VOLTAGE DROP		MINIMUM CAPACITANCE (uF)	MIN. INSERTION LOSS PER MIL-STD-220, FULL LOAD, +25°C												
		-55°C TO +85°C		-55°C TO +125°C																		
		AC	DC	AC	DC		DC	AC		15 KHz	30 KHz	50 KHz	75 KHz	100 KHz	150 KHz	300 KHz	500 KHz	1 MHz	10 MHz	100 MHz	1 GHz	10 GHz
SOLDER	0.3	---	80	---	50	0.76	0.23	---	2.8	4	29	44	--	62	73	80	80	80	80	--	80	--

PART MARKING:

M15733/23 0017
OLSP2 DATECODE
50VDC 0.3A 125C
51-390-305

PACKAGE MARKING:

STANDARD

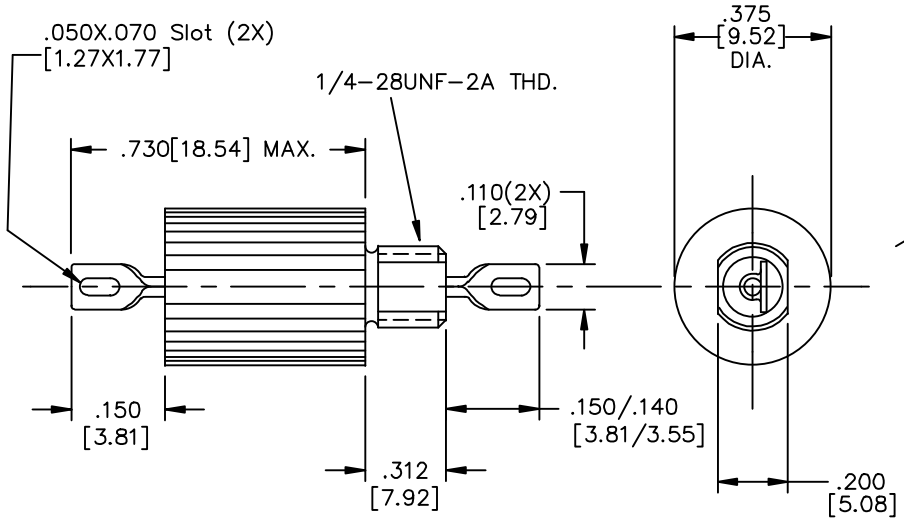

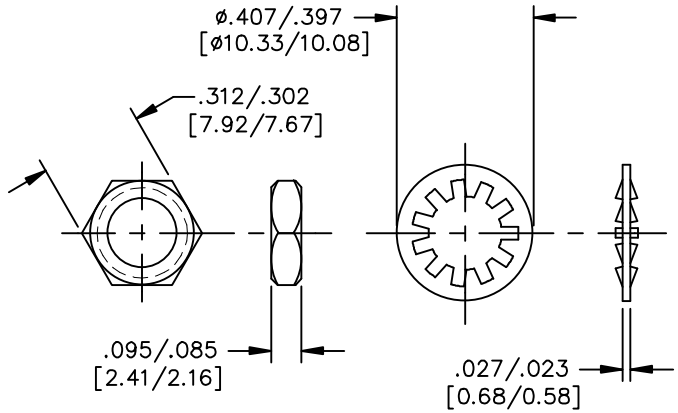

MTG. HARDWARE

MARKING NOTES:

N/A

SCHEMATIC

NOTES:

1) MOUNTING TORQUE NOT TO EXCEED 7in-lbs.

09 2) THIS PART IS CODED "NCA". API TECHNOLOGIES CORP. DOES NOT HAVE CHANGE AUTHORITY. CUSTOMER APPROVAL REQUIRED BEFORE PRODUCT/PROCESS CHANGES CAN BE MADE.

REV. NO.	CHANGE NOTICE
09	CN 66283-ENG
08	CN. 180539

UNLESS OTHERWISE SPECIFIED DIMENSIONS ARE IN INCHES. [MILLIMETERS]

DO NOT SCALE.

TOLERANCES UNLESS OTHERWISE SPECIFIED
Fractions ±
Dec. .xx±
Dec. .xxx± .010
Angles ±0° 30'

CODE IDENT. NO. OLSP2

api technologies corp.

FAIRVIEW PENNSYLVANIA

Dwn. KAUFFMAN

Date 11-30-12

Sheet 1 of 1

Description Low Pass EMI Filter

51-390-305

Quality Products From The Specialists In Electro-Magnetic Compatibility