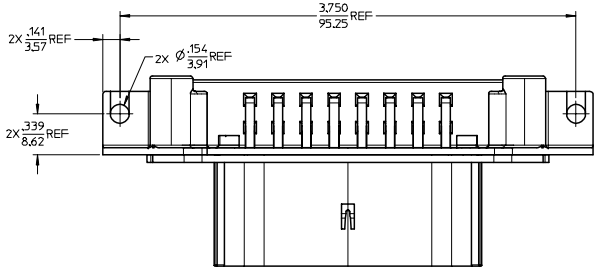

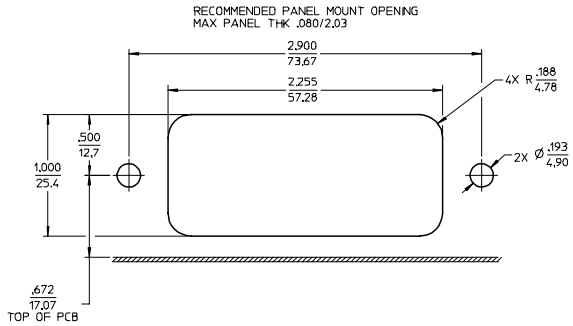

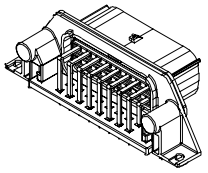

ASSEMBLED VIEW
SCALE 1:1

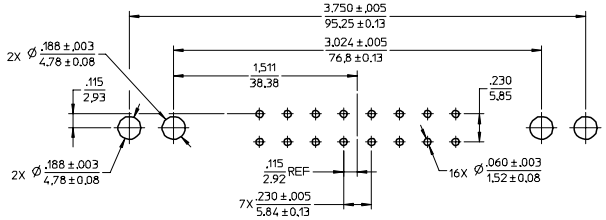

RECOMMENDED PCB LAYOUT
COMPONENT SIDE
TOLERANCES ARE NON-ACCUMULATIVE

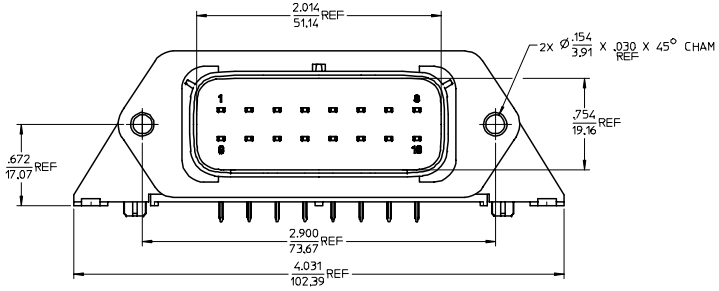

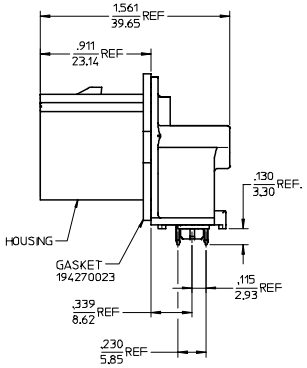

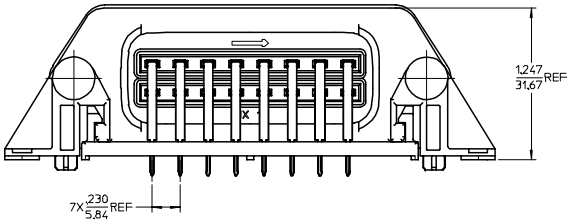

NOTES:

1. MATERIALS:
   HOUSING: POLYESTER (PBT), GLASS FILLED, UL94 V-0,
   COLOR: BLACK
   TERMINALS: COPPER ALLOY
2. FINISHES: 1. TIN ONLY: 100µIN TIN OVER 50µIN NICKEL
   2. TIN/GOLD: 30µIN SELECT GOLD (CONTACT MATING AREA),
   100µIN SELECT TIN (PCB TAIL AREA) OVER 50µIN NICKEL OVERALL.
3. PRODUCT SPECIFICATION: PS-19427-001.
4. PACKAGING SPECIFICATION: PK-19427-001.
5. MATES WITH: 19418 SERIES RECEPTACLE ASSEMBLIES.
6. RECOMMENDED MOUNTING HARDWARE: (2)#10 X .62/18.9 LONG PLASTIC
   THREAD CUTTING SCREWS. RECOMMENDED TORQUE 15-17 IN-LBS.
   SUGGESTED SOURCE: ITW SHAKEPROOF INDUSTRIAL BOSSCREW OR EQUIVALENT.

MATERIAL NO.	TERMINAL PLATING
194270101	TIN
194270117	TIN/GOLD

REVISED
ECC NO: ETC2006-0028 2005/10/10
DRWN:JPAWLICK 2005/10/11
CHKD:JPAWLICK1 2005/10/11
APPR:RDEROSS
DESCRIPTION
REV B

QUALITY SYMBOLS
▼=0
▽=0

GENERAL TOLERANCES (UNLESS SPECIFIED)

	mm	INCH
4 PLACES	± ---	± ---
3 PLACES	± ---	± .015
2 PLACES	± 0.38	± ---
1 PLACE	± ---	± ---
ANGULAR ± 1 °		

DRAFT WHERE APPLICABLE MUST REMAIN WITHIN DIMENSIONS

DIMENSION STYLE: IN/MM
SCALE: 2:1
DESIGN UNITS: INCH
THIRD ANGLE PROJECTION

DRAWN BY: DMYRICK DATE: 04/07/28
CHECKED BY: JPAWLICK1 DATE: 04/07/28
APPROVED BY: RDEROSS DATE: 04/07/28

TITLE: 16 WAY RIGHT ANGLE HEADER ASSEMBLY WITH MOUNTING HOLES

MOLEX INCORPORATED

MATERIAL NO.: SEE CHART
DOCUMENT NO.: SD-19427-017
SHEET NO.: 1 OF 1
SIZE: D

THIS DRAWING CONTAINS INFORMATION THAT IS PROPRIETARY TO MOLEX INCORPORATED AND SHOULD NOT BE USED WITHOUT WRITTEN PERMISSION

tb_frame_D_P_AM_T
Rev. D 2004/06/28