PART NAME	UTILIBOX (STYLE H)	PART No.	CU-1470 TO CU-1474

MATERIAL: ABS THERMOPLASTIC (FLAMMABILITY RATING OF 94-V0 AT 0.070" THICKNESS AND CONTINUOUS USE TEMPERATURE OF 70° C.)

FINISH:
BODY - OUTSIDE SURFACES ARE TEXTURED FINISH
COVER - VERTICAL OUTSIDE SURFACES ARE TEXTURED
REMAINDER OF PART IS SMOOTH.

COLOR: BLACK

LENGTH AND WIDTH DIMENSIONS ARE TAKEN FROM CLOSED END OF THE BOX. DIMENSIONS INCREASE SLIGHTLY AT OPEN END DUE TO TAPER.

NOTE: ALL DIMENSIONS HAVE ±0.010 TOLERANCE UNLESS OTHERWISE SPECIFIED.

FOUR (4) #4 x 1.000 LG. SELF THREADING SCREWS WITH HI/LOW THREADS ARE SUPPLIED FOR MOUNTING COVER.

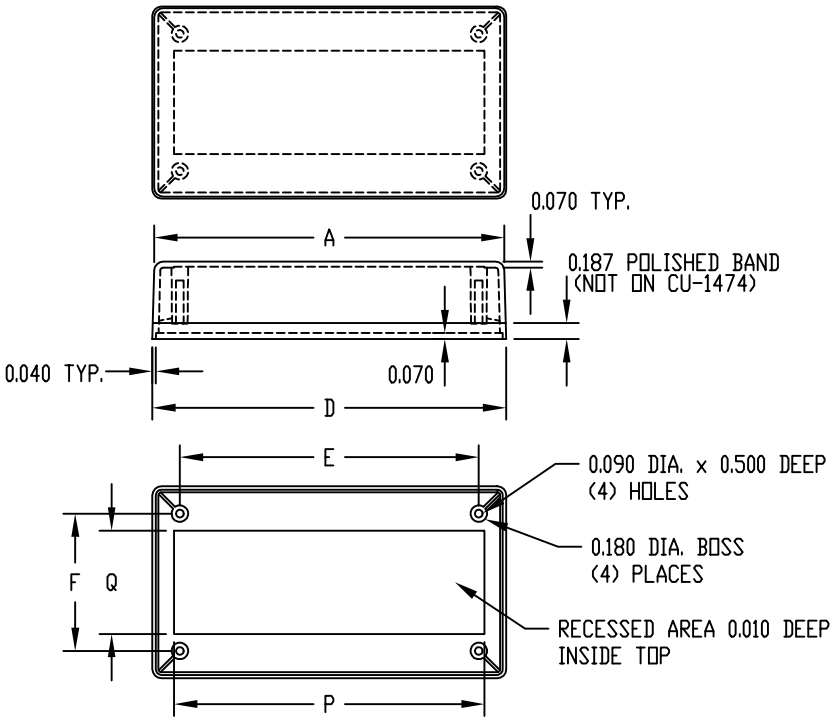

BODY

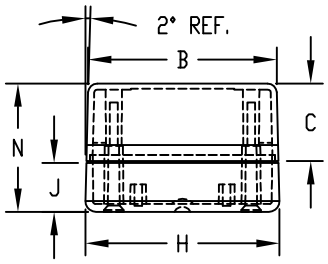

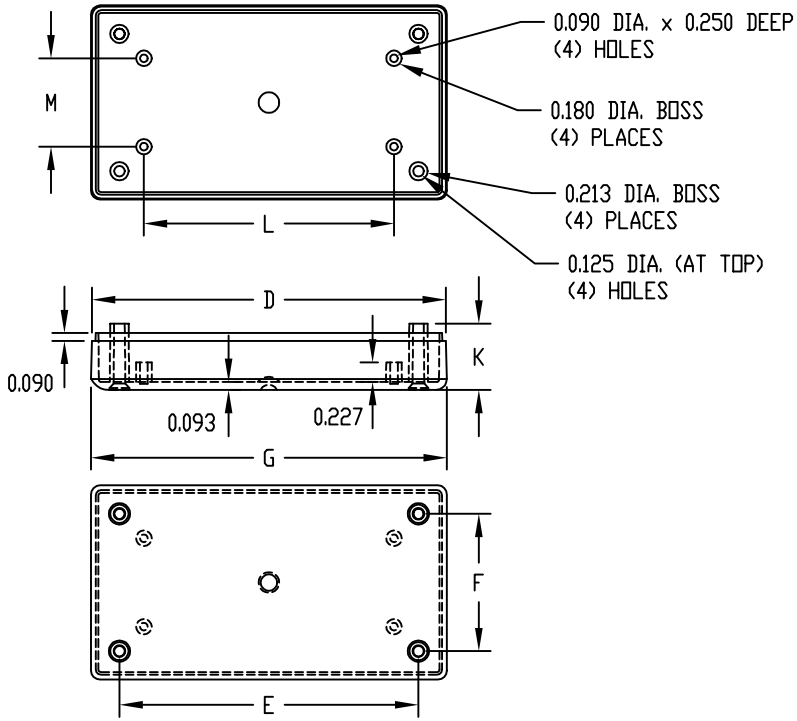

COVER

PART No.	A	B	C	D	E	F	G	H	J	K	L	M	N	P	Q
CU-1470	3.000	2.000	0.900	3.079	2.616	1.616	3.102	2.102	0.570	0.770	2.080	1.080	1.490	-----	-----
CU-1471	3.000	2.000	1.500	3.079	2.616	1.616	3.102	2.102	0.570	0.770	2.080	1.080	2.090	-----	-----
CU-1472	3.000	3.000	1.500	3.079	2.616	2.616	3.102	3.102	0.570	0.770	2.125	2.125	2.090	-----	-----
CU-1473	4.000	1.750	1.000	4.052	3.589	1.339	4.059	1.809	0.250	0.450	3.088	0.828	1.270	-----	-----
CU-1474	4.000	2.188	0.900	4.105	3.469	1.594	4.128	2.253	0.570	0.740	2.902	1.026	1.490	3.603	1.200