THIS DRAWING IS UNPUBLISHED. RELEASED FOR PUBLICATION SEP ,2004.
© COPYRIGHT 2004 BY TYCO ELECTRONICS CORPORATION. ALL RIGHTS RESERVED.

LOC	DIST
E	B

REVISIONS

P	LTR	DESCRIPTION	DATE	DWN	APVD
	D	ECO-09-003420	11 Mar 09	RITA	BOB

NOTES

1. 100 TRAY PACK IN ACCORDANCE WITH AMP SPEC 107-3275
2. SINGLE PACK IN ACCORDANCE WITH AMP SPEC 107-3275
3. Au PLATING
4. Ni PLATING
5. FOR TECHNICAL DATA REFER TO YOUR LOCAL TYCO ELECTRONICS SALES OFFICE
6. ALL DIMENSIONS ARE NOMINAL FOR REFERENCE ONLY UNLESS OTHERWISE STATED

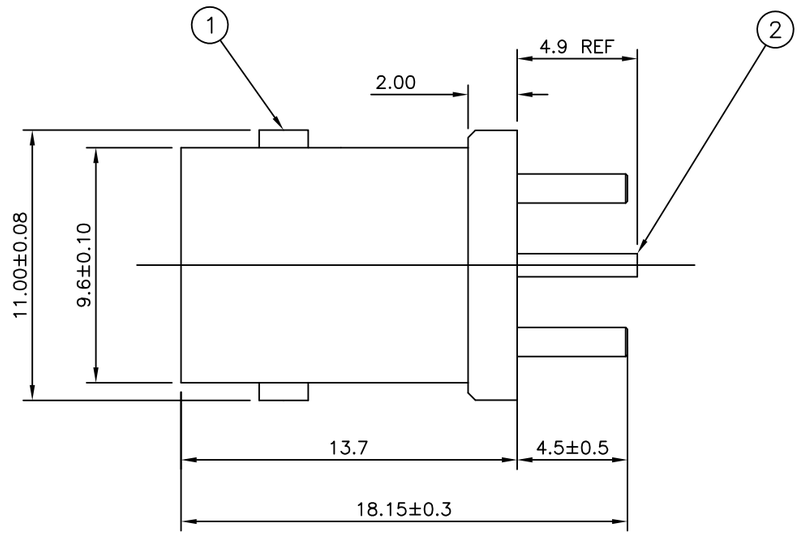

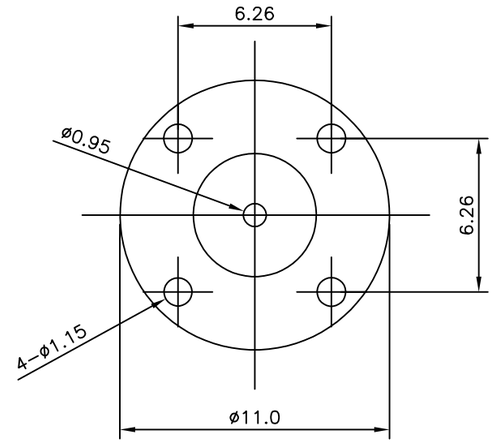

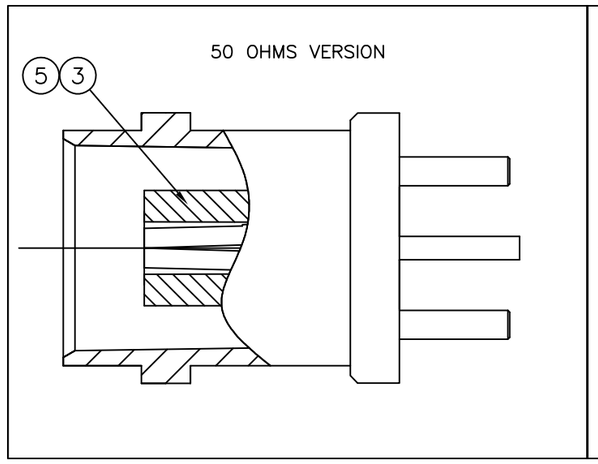

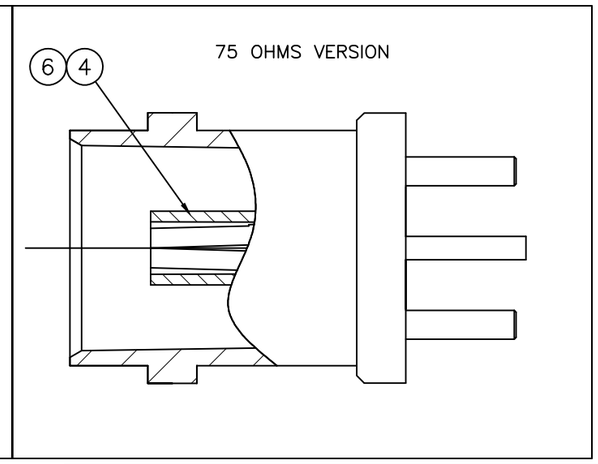

RECOMMENDED PCB LAYOUT WITH MOUNTING POSTS

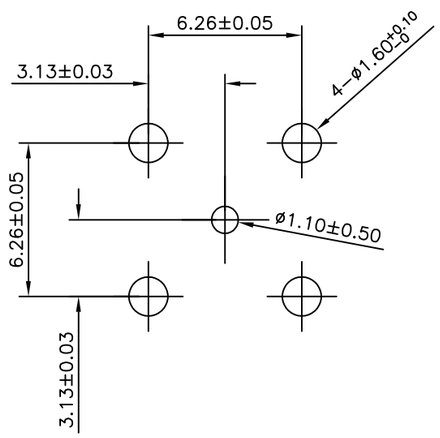

5--7	5--6	5--5	5--4	5--3	5--2	5--1	5--0	MATERIAL	DESCRIPTION	ITEM
1	1	–	–	–	–	–	–	PTFE	INSULATOR	6
–	–	1	1	–	–	–	–	PTFE	INSULATOR	5
–	–	–	–	1	1	–	–	POLYMETHYLPENTENE	INSULATOR	4
–	–	–	–	–	–	1	1	POLYMETHYLPENTENE	INSULATOR	3
1	1	1	1	1	1	1	1	PHOS BRONZE (3)	CONTACT	2
1	1	1	1	1	1	1	1	ZINC ALLOY (4)	BODY	1
(2)	(1)	(2)	(1)	(2)	(1)	(2)	(1)			

QUANTITY PER ASSY — PARTS LIST

THIS DRAWING IS A CONTROLLED DOCUMENT.

DIMENSIONS: MM

TOLERANCES UNLESS OTHERWISE SPECIFIED:
0 PLC ± –
1 PLC ± –
2 PLC ± –
3 PLC ± –
4 PLC ± –
ANGLES ± –

MATERIAL –

FINISH –

DWN RITA ZUO 11 Mar 09
CHK ANSON MA 11 Mar 09
APVD BOB ZHAO 11 Mar 09
PRODUCT SPEC 108-112000
APPLICATION SPEC –
WEIGHT –

Tyco Electronics
Tyco Electronics Corporation
Kunshan,Jiangsu,PRC 215312

NAME
BNC STRAIGHT LOW PROFILE PCB SOCKET
–
–

SIZE	CAGE CODE	DRAWING NO	RESTRICTED TO
A3	00779	C-1634503	–

CUSTOMER DRAWING

SCALE	SHEET	REV
NTS	1 OF 1	D