THIS DRAWING IS UNPUBLISHED. RELEASED FOR PUBLICATION -,- .
© COPYRIGHT - By - ALL RIGHTS RESERVED.

LOC	DIST
AF	50

REVISIONS

P	LTR	DESCRIPTION	DATE	DWN	APVD
	C	REVISED PER ECR-12-013459	27NOV2012	KH	PD

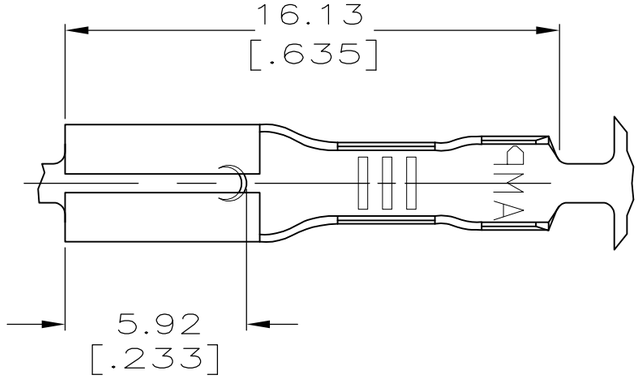

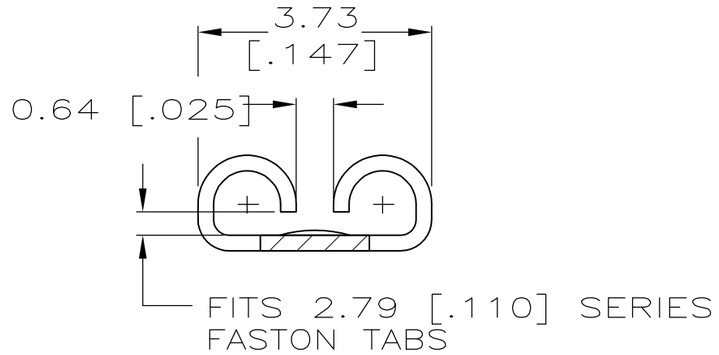

VIEW Z—Z
SCALE 10:1

1 CONTINUOUS STRIP ON REELS

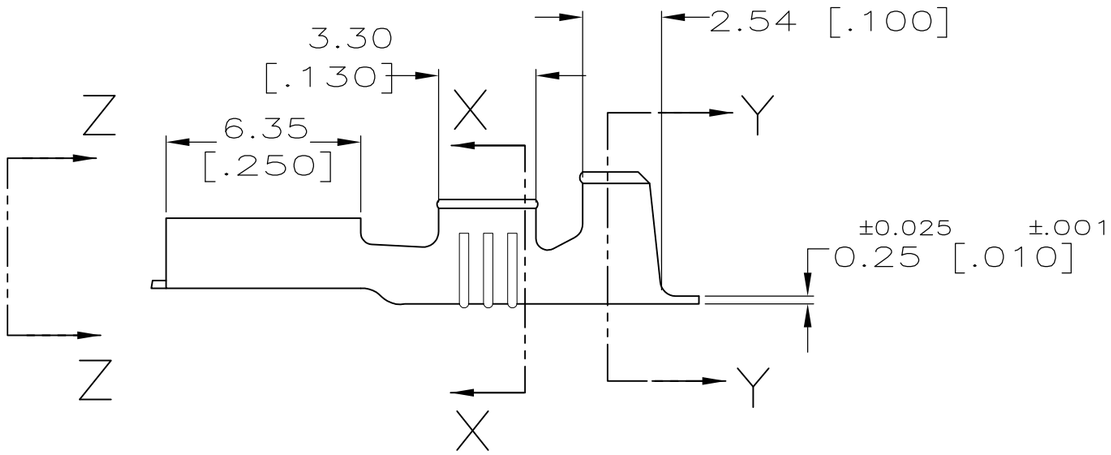

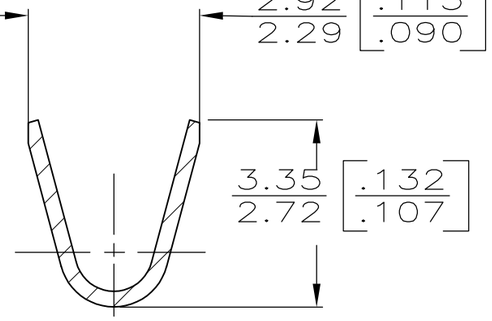

SECTION X—X
SCALE 10:1

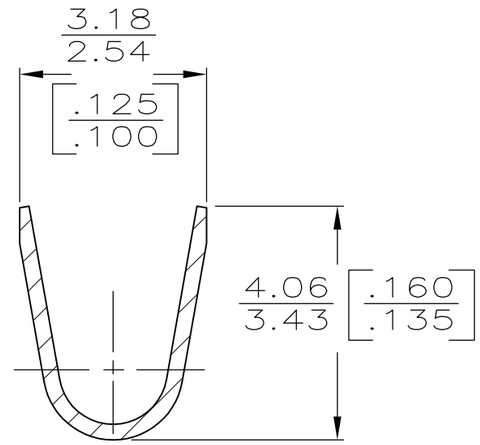

SECTION Y—Y
SCALE 10:1

INSUL RANGE	WIRE SIZE	MATING TAB THK ±0.025 ±[.001]	PART NO
1.52–2.54 [.060–.100]	0.5–1.4mm² [20–16]	0.25 [.010]	62968–1

THIS DRAWING IS A CONTROLLED DOCUMENT.

DIMENSIONS: mm [INCHES]

TOLERANCES UNLESS OTHERWISE SPECIFIED:

0 PLC	± –
1 PLC	± –
2 PLC	± –
3 PLC	± 0.38 [.015]
4 PLC	± –
ANGLES	± –

MATERIAL: BRASS

FINISH: PRE-TIN

DWN	JR RUTH	1/2/91
CHK	MS FEHER	1/2/91
APVD	C MEYERS	1/2/91
PRODUCT SPEC	—	
APPLICATION SPEC	—	
WEIGHT	—	

TE Connectivity

NAME: RECEPTACLE, FASTON, 2.79 [.110] SERIES

SIZE	CAGE CODE	DRAWING NO	RESTRICTED TO
A3	00779	C-62968	—

CUSTOMER DRAWING

SCALE	SHEET	REV
5:1	1 OF 1	C