Miniatur Radial Gebläse
Miniature Radial Blower
Ventilateur miniature radial

SN EN ISO 9001 CERTIFICATED

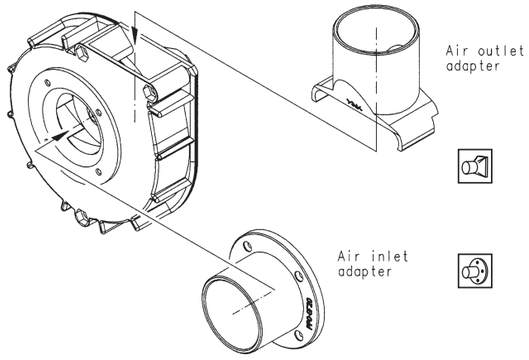

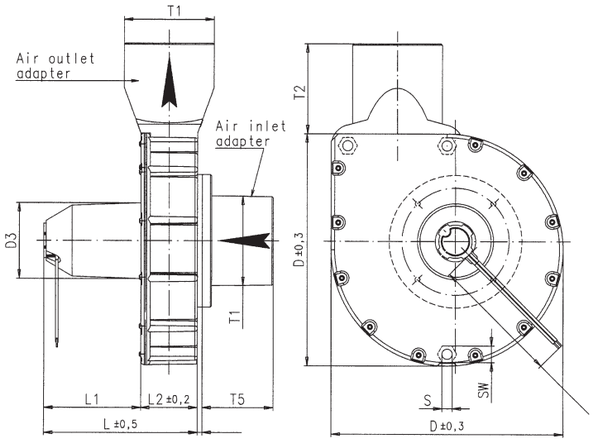

U97LM-005KK-1 5 VDC

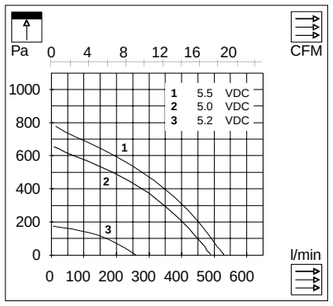

U97EM-012KK-3 12 VDC

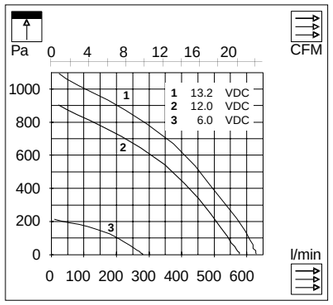

U97EM-024KK-3 24 VDC

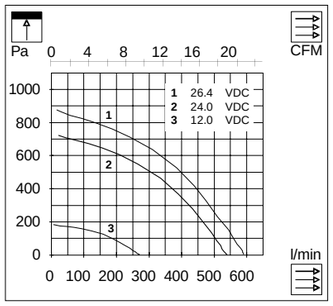

U97LM/EM	mm	inch
D	98	3.858
D3	ø 32	ø 1.260
L (LM/EM)	65/75	2.559/2,953
L1 (LM/EM)	41/51	1.614/2,008
L2	24	0.945
S	ø 4.3	ø 0.169
SW	7.0	0.276
T1	ø 38	ø 1.496
T2	38	1.496
T5	30	1.181

Z 5208 – 201 A4 U97LMEM 0801/2000

micronel®
MICRONEL AG
CH-8317 Tagelswangen
www.micronel.ch
Tel. +41 52 - 355 16 16
Fax +41 52 - 355 16 20
info@micronel.com

			U97LM-005KK-1	U97EM-012KK-3	U97EM-024KK-3
U	U_N	V	**5**	**12**	**24**
U	U	V	2.5 - 5.5	6 -13.2	12 - 26.4
I	I_N	mA	834	630	230
I	I_N	mA	800	615	225
I	I_N	mA	435	350	120
	I_{block}	A	6.2	5.1	3.1
P	P_N	W	4.0	7.4	5.4
rpm	n	min^{-1}	8950	10’650	10’050
rpm	n	min^{-1}	9050	10’750	10’100
rpm	n	min^{-1}	10’000	11’300	10’500
	$\dot{V}$	l/min; CFM	490/17.3	575/20.3	540/19.06
	$\dot{V}$	l/min; CFM	206/7.27	240/8.47	222/7.84
	p	Pa	480	680	585
	p	Pa	650	905	725
	LpA	dB(A)	58	62	60
MTTF	MTTF	hr	6000	9000	9000
	T	°C/F	-20...+65/-5...+150F	-20...+65/-5...+150F	-20...+65/-5...+150F
	m	gr/oz.	160/5.64	210/7.41	210/7.41
	M	mm/inch		190/7.48 (AWG 24)	
	PPO	UL-94V-1	●	●	●
			●	●	●
			●	●	●
			●	●	●

Freiblasend	Free blowing	Refoulement libre
Prüfarbeitspunkt bei ca. 50% Luftmenge	Inspection working point at approx. 50% air vol.	Point de travail de contrôle appr. à 50% volume d’air
Druckerhöhung statisch	Pressure difference static	Différence de pression statique

micronel®
MICRONEL AG
CH-8317 Tagelswangen
www.micronel.ch
Tel. +41 52 - 355 16 16
Fax +41 52 - 355 16 20
info@micronel.com