THIS DRAWING IS UNPUBLISHED. RELEASED FOR PUBLICATION APRIL ,2004.
© COPYRIGHT 2004 By – ALL RIGHTS RESERVED.

| LOC | DIST |
|---|---|
| E | B |

REVISIONS

| P | LTR | DESCRIPTION | DATE | DWN | APVD |
|---|---|---|---|---|---|
| | A1 | ECO–11–007944 | 15APR2011 | RZ | MY |

NOTES:

1. SINGLE PACK IN ACCORDANCE WITH SPEC 107–3275
2. 100 TRAY PACK IN ACCORDANCE WITH SPEC 107–3275
3. 0.08µm Au PLATING OVER 1.27µm Ni PLATING
4. 0.08µm Au PLATING OVER 1.27µm Ni PLATING OVER 0.76µm Cu PLATING
5. 0.76µm Au PLATING OVER 1.27µm Ni PLATING OVER 0.76µm Cu PLATING
6. PASSIVATED (GOLD PLATED CABLE ENTRY)
7. FOR TECHNICAL DATA REFER TO YOUR LOCAL TYCO ELECTRONICS SALES OFFICE
8. ALL DIMENSIONS ARE NOMINAL FOR REFERENCE ONLY UNLESS OTHERWISE STATED

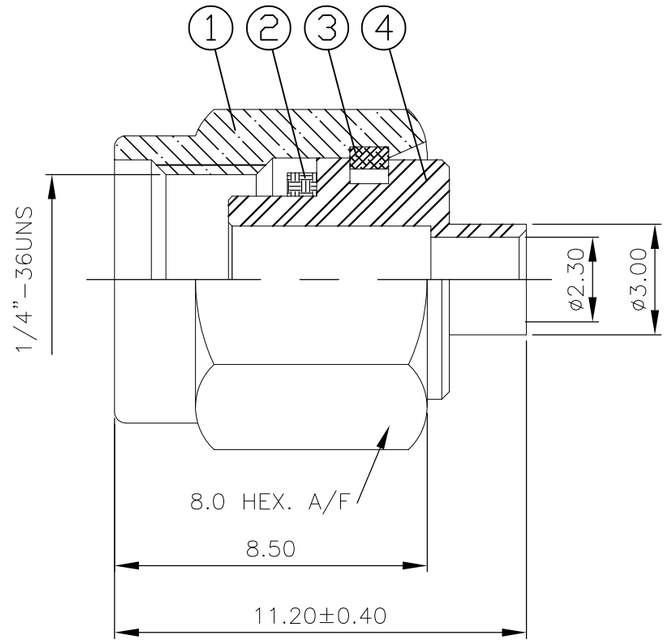


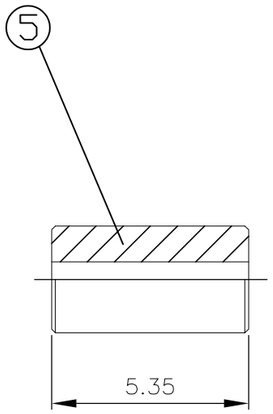


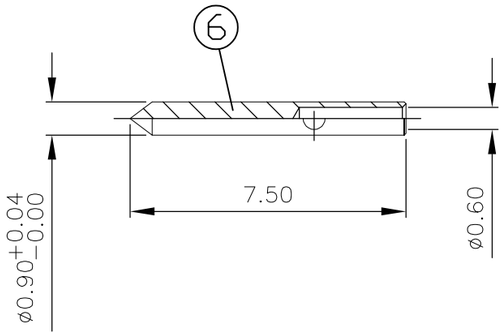


RECOMMENDED
CABLE STRIPPING DIM'S

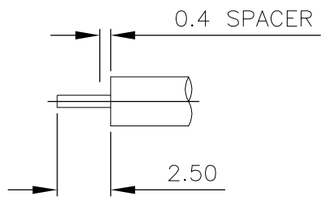


| | | | | | | | | | | |
|---|---|---|---|---|---|---|---|---|---|---|
| | | 1 | 1 | 1 | 1 | 1 | 1 | BRASS (5) | CENTER CONTACT | 6 |
| | | 1 | 1 | 1 | 1 | 1 | 1 | PTFE | INSULATOR | 5 |
| | | 1 | 1 | – | – | – | – | BRASS (4) | BODY | 4 |
| | | – | – | 1 | 1 | – | – | STAINLESS STEEL (6) | BODY | 4 |
| | | – | – | – | – | 1 | 1 | STAINLESS STEEL (3) | BODY | 4 |
| | | 1 | 1 | 1 | 1 | 1 | 1 | STAINLESS STEEL | CIRCLIP | 3 |
| | | 1 | 1 | 1 | 1 | 1 | 1 | SILICON | GASKET | 2 |
| | | 1 | 1 | – | – | – | – | BRASS (4) | SHELL | 1 |
| | | – | – | 1 | 1 | – | – | STAINLESS STEEL (6) | SHELL | 1 |
| | | – | – | – | – | 1 | 1 | STAINLESS STEEL (3) | SHELL | 1 |
| | | 3--1 | 3--0 | 2--1 | 2--0 | 1--1 | 1--0 | MATERIAL | DESCRIPTION | ITEM |
| | | (2) | (1) | (2) | (1) | (2) | (1) | | | |
| QUANTITY PER ASSY | | | | | | | | PARTS LIST | | |

THIS DRAWING IS A CONTROLLED DOCUMENT.

DIMENSIONS: mm

TOLERANCES UNLESS OTHERWISE SPECIFIED:

| | |
|---|---|
| 0 PLC | ± – |
| 1 PLC | ± – |
| 2 PLC | ± – |
| 3 PLC | ± – |
| 4 PLC | ± – |
| ANGLES | ± – |

MATERIAL: SEE TABLE

FINISH: –

| | | |
|---|---|---|
| DWN | R.SMITH | 28JAN04 |
| CHK | S.PARLOW | 28JAN04 |
| APVD | F.WHEELER–KING | 28JAN04 |

PRODUCT SPEC: 108–112003

APPLICATION SPEC: 408–4765

WEIGHT: –

CUSTOMER DRAWING

TE Connectivity

NAME: SMA STRAIGHT PLUG DIRECT SOLDER NON CAPTIVE CENTRE CONTACT RG405/U

| SIZE | CAGE CODE | DRAWING NO | RESTRICTED TO |
|---|---|---|---|
| A3 | 00779 | C–1478904 | – |

| SCALE | SHEET | REV |
|---|---|---|
| 1:1 | 1 OF 1 | A1 |