samtec

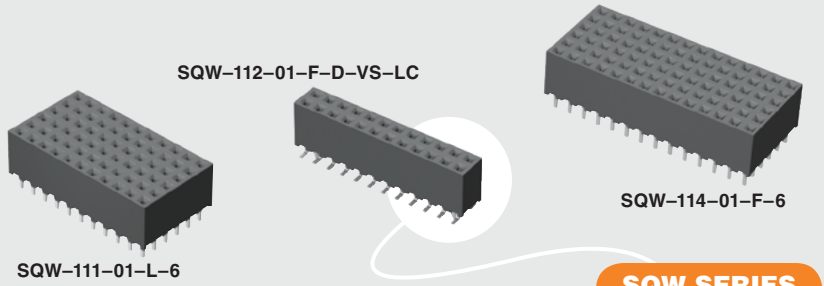

(2.00 mm) .0787"

SQW SERIES

COST-EFFECTIVE RUGGED SOCKETS

SPECIFICATIONS

For complete specifications and recommended PCB layouts see www.samtec.com?SQW

Insulator Material:
Black Liquid Crystal Polymer
Contact Material:
Phosphor Bronze
Plating:
Sn or Au over
50 µ" (1.27 µm) Ni
Current Rating (SQW/TMMH):
3.8 A per pin
(2 pins powered)
Voltage Rating:
281 VAC mated with TMM;
250 VAC mated with TMMH
Operating Temp Range:
-55 °C to +125 °C
Insertion Depth:
(2.62 mm) .103" to
(5.03 mm) .198" with
(0.38 mm) .015" wipe
Max Cycles:
100 with 10 µ" (0.25 µm) Au
RoHS Compliant:
Yes

Board Mates:
TMMH, TMM, MTMM, MMT, TW, TSH, LTMM, PTT

Cable Mates:
TCMD

TIGER BUY™ CONTACT

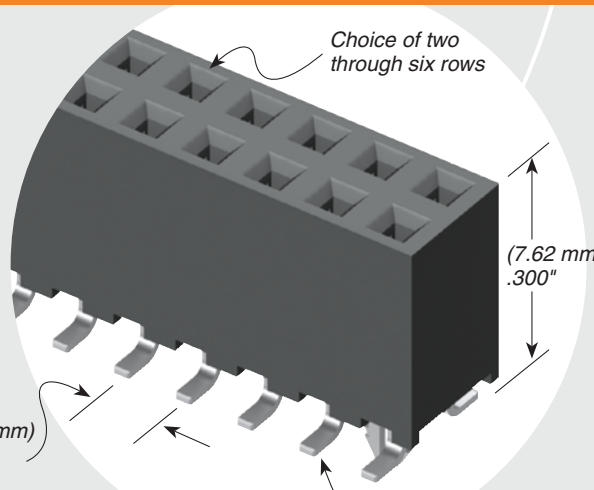

PROCESSING

Lead–Free Solderable:
Yes, for -D & -D-VS
(Wave only for -T, -Q, -5 & -6)
SMT Lead Coplanarity:
(0.10 mm) .004" max (02-10)
(0.15 mm) .006" max (11-50)*
*(.004" stencil solution may be available; contact IPG@samtec.com)

RECOGNITIONS

For complete scope of recognitions see www.samtec.com/quality

FILE NO. E111594

Note:
Some lengths, styles and options are non-standard, non-returnable.

SQW	–	1	NO. PINS PER ROW	–	01	–	PLATING OPTION	–	ROW OPTION	–	OPTION
			02 thru 50				–F = Gold flash on contact, Matte Tin on tail –L = 10 µ" (0.25 µm) Gold on contact, Matte Tin on tail		–D = Double Row –D–VS = Double Row Surface Mount –T = Triple Row –Q = Four Row –5 = Five Row –6 = Six Row		–"XXX" = Polarized Position –D–VS only options: –A = Alignment Pin (5 positions minimum) Metal or plastic at Samtec discretion. (N/A with -LC) –LC = Locking Clip (5 positions minimum) (N/A with -A) (Manual placement required) –K = (4.25 mm) .167" DIA Polyimide Film Pick & Place Pad (4 positions minimum) –P = Pick & Place Pad (4 positions minimum) –TR = Tape & Reel Packaging (4 thru 28 positions only)

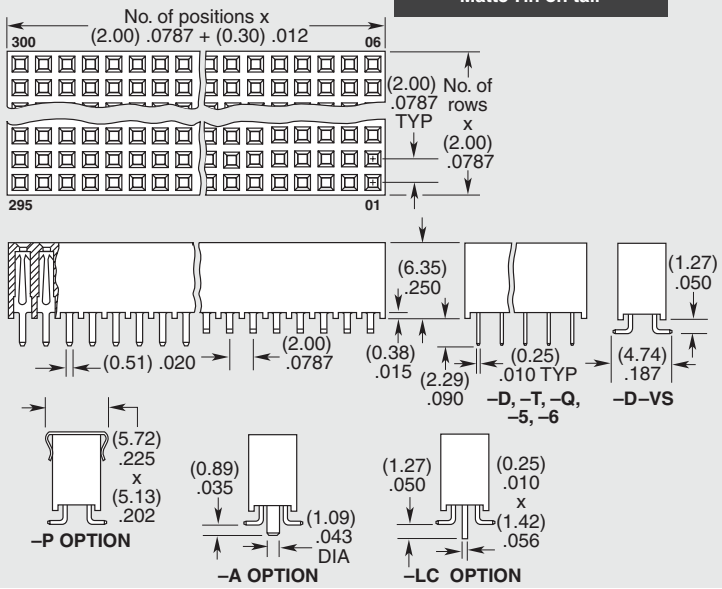

Due to technical progress, all designs, specifications and components are subject to change without notice.

All parts within this catalog are built to Samtec's specifications.
Customer specific requirements must be approved by Samtec and identified in a Samtec customer-specific drawing to apply.