MICRO SWITCH
a Honeywell Division
FED. MFG. CODE 91929

SWITCH - ENCLOSED

CATALOG LISTING
BAF1-2RQ9-LH
(LEFT HAND)

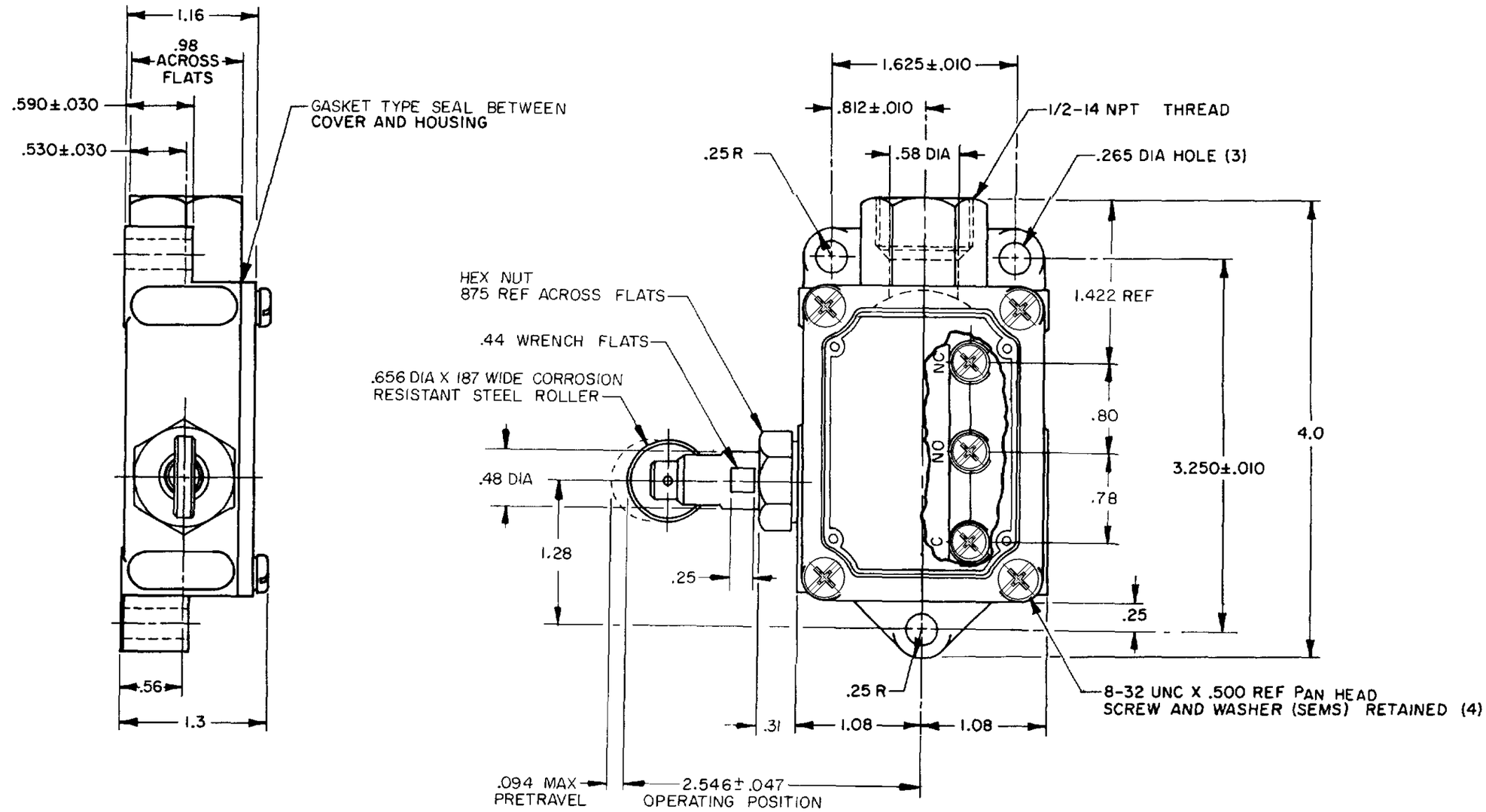

THIS DRAWING COVERS A PROPRIETARY ITEM AND IS THE PROPERTY OF MICRO SWITCH. A DIVISION OF HONEYWELL. THIS DRAWING IS NOT TO BE COPIED OR USED WITHOUT THE APPROVAL OF MICRO SWITCH

THIRD ANGLE PROJECTION

SCALE FULL

DO NOT SCALE PRINT

CHARACTERISTICS	ELECTRICAL DATA
OPERATING FORCE - - - - 2 1/2 LB MAX	CONTACT ARRANGEMENT S P D T
RELEASE FORCE - - - - - - 3/4 LB MIN	L23 20A 125, 250 OR 480 VAC 10A 125 VAC "L" 1HP 125 VAC, 2HP 250 VAC 1/2A 125 VDC, 1/4A 250 VDC
DIFFERENTIAL TRAVEL - - - - - - .010 MAX	
OVERTRAVEL - - - - - - - - - - .156 MIN	
SWITCH-BASIC REPLACEMENT - - BA-2R708-P7	

UNLESS OTHERWISE SPECIFIED TOLERANCES ARE

ONE PLACE	(.0)	±.030
TWO PLACE	(.00)	±.015
THREE PLACE	(.000)	±.005
ANGLES		±

WEIGHT .550 LB

NOTE

1 – 8-32 UNC X (.219) BINDER HEAD,COMBINATION , TERMINAL SCREWS AND CUPWASHERS
2 – ROLLER PLUNGER ASSEMBLY MAY BE SET AT ANY POSITION AROUND AXIS OF PLUNGER

CATALOG LISTING BAF1-2RQ9-LH
PAGE 1 OF 1
RELEASE NO. CO-73287 M REPLACES
ISSUE 17 M
CHECK

REVISIONS

A	CO-73287M	GJW 15 MAY 95
B	83053A	GJW 2 APR 97
C	C095664	GJW 7 JAN 00

CHECK
25 MAY 95 JJA
CHECK
15 MAY 95 GJW
DRAWN
FORMTEK