THIS DRAWING IS UNPUBLISHED. RELEASED FOR PUBLICATION - , - .
© COPYRIGHT - By - ALL RIGHTS RESERVED.

LOC	DIST
AD	00

REVISIONS

P	LTR	DESCRIPTION	DATE	DWN	APVD
	R2	REVISED PER ECO-11-004587	11MAR11	RK	HMR

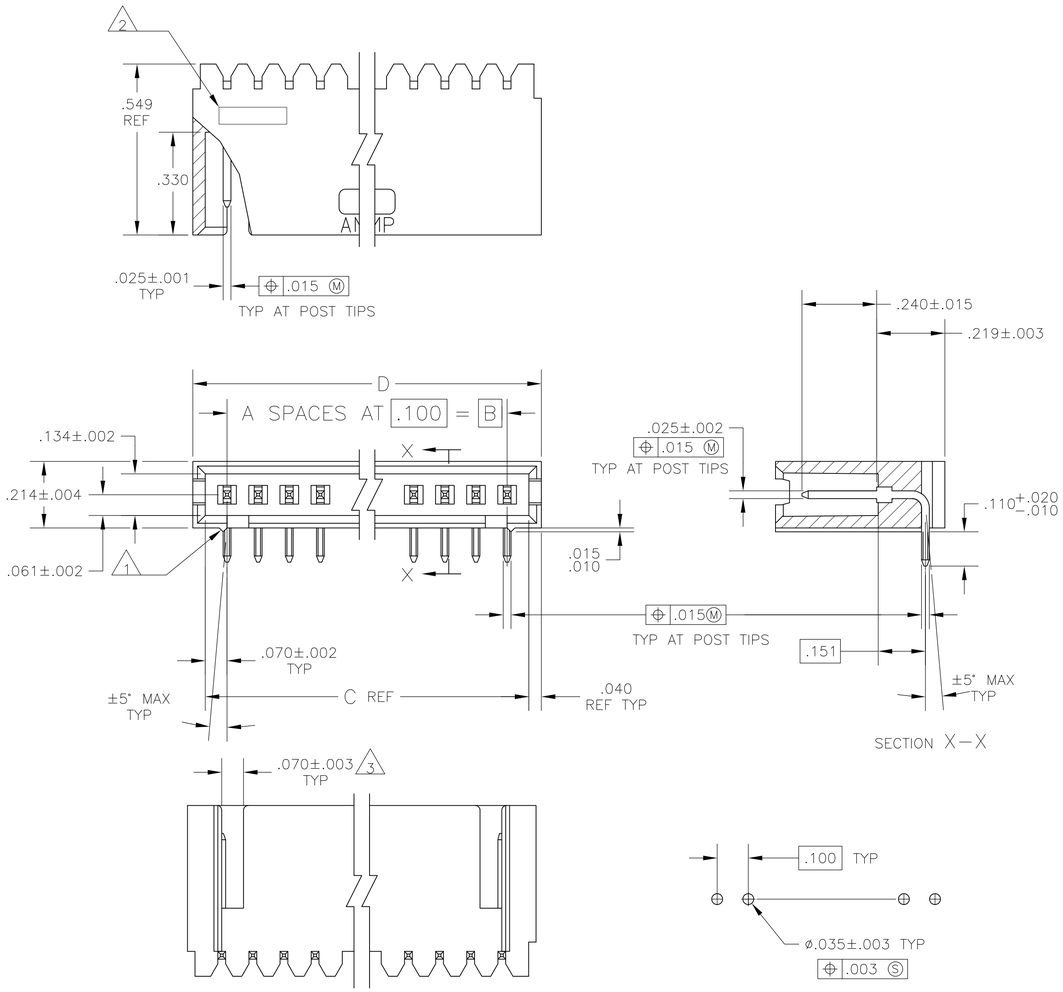

RECOMMENDED HOLE LAYOUT

OBSOLETE 9	7	2.620	2.540	2.400	24	25	~~7-102523-3~~
	7	2.520	2.440	2.300	23	24	~~7-102523-2~~
	7	2.420	2.340	2.200	22	23	~~7-102523-1~~
	7	2.320	2.240	2.100	21	22	~~7-102523-0~~
	7	2.220	2.140	2.000	20	21	~~6-102523-9~~
	7	2.120	2.040	1.900	19	20	~~6-102523-8~~
	7	2.020	1.940	1.800	18	19	~~6-102523-7~~
	7	1.920	1.840	1.700	17	18	~~6-102523-6~~
	7	1.820	1.740	1.600	16	17	~~6-102523-5~~
	7	1.720	1.640	1.500	15	16	6-102523-4
OBSOLETE 9	7	1.620	1.540	1.400	14	15	~~6-102523-3~~
	7	1.520	1.440	1.300	13	14	6-102523-2
OBSOLETE 9	7	1.420	1.340	1.200	12	13	~~6-102523-1~~
	7	1.320	1.240	1.100	11	12	6-102523-0
OBSOLETE 9	7	1.220	1.140	1.000	10	11	~~5-102523-9~~
	7	1.120	1.040	.900	9	10	5-102523-8
OBSOLETE 9	7	1.020	.940	.800	8	9	~~5-102523-7~~
	7	.920	.840	.700	7	8	5-102523-6
	7	.820	.740	.600	6	7	5-102523-5
	7	.720	.640	.500	5	6	5-102523-4
	7	.620	.540	.400	4	5	5-102523-3
	7	.420	.340	.200	2	3	5-102523-2
	7	.520	.440	.300	3	4	5-102523-1
OBSOLETE	5	1.120	1.040	.900	9	10	3-102523-7
	5	.920	.840	.700	7	8	3-102523-6
6	5	.520	.440	.300	3	4	3-102523-5
OBSOLETE	4	3.720	3.640	3.500	35	36	3-102523-4
OBSOLETE	4	3.620	3.540	3.400	34	35	3-102523-3
OBSOLETE	4	3.520	3.440	3.300	33	34	3-102523-2
OBSOLETE	4	3.420	3.340	3.200	32	33	3-102523-1
OBSOLETE	4	3.320	3.240	3.100	31	32	3-102523-0
OBSOLETE	4	3.220	3.140	3.000	30	31	2-102523-9
OBSOLETE	4	3.120	3.040	2.900	29	30	2-102523-8
OBSOLETE	4	3.020	2.940	2.800	28	29	2-102523-7
OBSOLETE	4	2.920	2.840	2.700	27	28	2-102523-6
OBSOLETE	4	2.820	2.740	2.600	26	27	2-102523-5
OBSOLETE	4	2.720	2.640	2.500	25	26	2-102523-4
OBSOLETE 9	4	2.620	2.540	2.400	24	25	~~2-102523-3~~
	4	2.520	2.440	2.300	23	24	~~2-102523-2~~
	4	2.420	2.340	2.200	22	23	~~2-102523-1~~
	4	2.320	2.240	2.100	21	22	~~2-102523-0~~
	4	2.220	2.140	2.000	20	21	~~1-102523-9~~
	4	2.120	2.040	1.900	19	20	~~1-102523-8~~
	4	2.020	1.940	1.800	18	19	~~1-102523-7~~
	4	1.920	1.840	1.700	17	18	~~1-102523-6~~
	4	1.820	1.740	1.600	16	17	~~1-102523-5~~
SUP BY 6-102523-4 9	4	1.720	1.640	1.500	15	16	~~1-102523-4~~
OBSOLETE 9	4	1.620	1.540	1.400	14	15	~~1-102523-3~~
	4	1.520	1.440	1.300	13	14	1-102523-2
OBSOLETE 9	4	1.420	1.340	1.200	12	13	~~1-102523-1~~
	4	1.320	1.240	1.100	11	12	1-102523-0
OBSOLETE 9	4	1.220	1.140	1.000	10	11	~~102523-9~~
	4	1.120	1.040	.900	9	10	102523-8
OBSOLETE 9	4	1.020	.940	.800	8	9	~~102523-7~~
	4	.920	.840	.700	7	8	102523-6
	4	.820	.740	.600	6	7	102523-5
	4	.720	.640	.500	5	6	102523-4
	4	.620	.540	.400	4	5	102523-3
	4	.420	.340	.200	2	3	102523-2
	4	.520	.440	.300	3	4	102523-1
	FINISH	D	C	B	A	NO. OF POSN	PART NO.

1. STANDOFFS:
   3 THRU 9 POSN – (2 REQD) ON OUTSIDE ENDS OF HOUSING
   10 THRU 18 POSN – (3 REQD) TWO ON OUTSIDE ENDS AND ONE CENTERED ON HOUSING
   19 POSN AND LARGER – (4 REQD) TWO ON OUTSIDE ENDS AND TWO EVENLY SPACED WITHIN REMAINING LENGTH OF HOUSING
2. RECESSED DATE CODE
3. FOR 3 POSITION ONLY, ONE SLOT .215 WIDE.
4. .000100–.000200 BRIGHT TIN–LEAD OVER .000050 NICKEL.
5. .000100–.000200 BRIGHT TIN OVER .000050 NICKEL.
6. PRELIMINARY PART
7. .000100–.000200 MATTE TIN OVER .000050 NICKEL.
8. MATERIAL:
   HOUSING: FLAME RETARDANT THERMOPLASTIC, COLOR: BLACK
   POSTS: PHOS BRONZE
9. OBSOLETE PARTS: OBSOLETE CIS STREAMLINING PER D.RENAUD/D.SINISI

THIS DRAWING IS A CONTROLLED DOCUMENT.

DIMENSIONS: INCHES

TOLERANCES UNLESS OTHERWISE SPECIFIED:
0 PLC ± –
1 PLC ± –
2 PLC ± –
3 PLC ± .005
4 PLC ± –
ANGLES ± –

MATERIAL 8

FINISH SEE TABLE

DWN S.A.SHUEY 28SEP89
CHK H.MOLL 30CT89
APVD R.FLICKER 30CT89
PRODUCT SPEC —
APPLICATION SPEC —
WEIGHT —

TE Connectivity

NAME HEDADER ASSEMBLY MOD II, SINGLE ROW .100 C/L, RIGHT ANGLE

SIZE	CAGE CODE	DRAWING NO	RESTRICTED TO
A1	00779	C-102523	—

CUSTOMER DRAWING SCALE 4:1 SHEET 1 OF 1 REV R2

4805 (3/11)