# The power of space

The Bussmann™ series Compact Circuit Protector for Class CF CUBEFuse™ delivers the smallest footprint compared to any Class J disconnect solution — requiring up to 51% less space.

## Contents


| Description | Section page |
|---|---|
| **Compact Circuit Protector disconnect switches** | |
| Class CF CUBEFuse up to 100 A (CCP2-CF) | 2-8 |
| Class CF CUBEFuse 200 and 400 A (CCP2-CF) | 9-12 |
| Accessories for CUBEFuse CCP2 | 13- |
| Multi-wire lug kits | 13-14 |
| Selector and pistol handles, shafts, NFPA 79 compliant handles | 15-16 |
| Flange handle rod and cable operators | 17 |
| 200 and 400 A switch rotary mechanisms | 18 |
| Auxiliary contacts | 19-20 |
| PLC fuse monitors (up to 100 A switches) | 21-22 |
| **How to order Class CF switches** | 23-35 |
| Switches up to 100 A | 23-30 |
| 200 and 400 A switches | 32-35 |

| Description | Section page |
|---|---|
| **Compact Circuit Protector disconnect switches** | |
| Compact Circuit Protector Base (CCP2B - CUBEFuse) | 36-37 |
| Class CC, UL supplemental and IEC 10x38 (CCP2) | 38-42 |
| Accessories for Class CC, UL supp. and IEC 10x38 CCP2 | 43-47 |
| Multi-wire lug kits | 43 |
| Selector and pistol handles, shafts, NFPA 79 compliant handles | 44 |
| Auxiliary contacts | 45 |
| PLC fuse monitors | 46-47 |
| **How to order Class CC, UL supplemental and IEC 10x38 switches** | 48-51 |
| Low profile Class CC and G, UL supplemental and IEC 10x38 (CCPLP) | 52-53 |
| **UL 98 fused disconnect switches, 30 to 800 A** | |
| Introduction and agency information | 54 |
| Product line summary — UL | 55 |
| 30 A Class CC and compact Class J | 56-57 |
| 30 A standard Class J | 58-59 |
| 60 A compact Class J | 60-61 |
| 60 A standard Class J | 62-63 |
| 100 A standard Class J | 64-65 |
| 200 A and 400 A standard Class J | 66-68 |
| 600 A standard Class J and 800 A Class L | 69-70 |
| **UL 98 non-fused disconnect switches, 30 to 1200 A** | |
| Introduction, agency information and IEC product summary | 71 |
| UL product summary | 72 |
| 30 A, 60 A and 100 A compact | 73-74 |
| 100 A, 200 A and 400 A standard | 75-76 |
| 600 A, 800 A, 1000 A and 1200 A standard | 77-78 |
| **UL 508 non-fused disconnect switches, 16 to 80 A** | |
| Introduction, agency information and IEC product summary | 79 |
| UL product summary | 80 |
| 16 A, 25 A, 40 A, 63 A and 80 A | 81-83 |
| **Enclosed UL 98 and UL 508 disconnect switches** | |
| Introduction and agency information | 84 |
| Fused UL 98 enclosed disconnects, 30 to 800 A | 85-86 |
| Non-fused UL 98 enclosed disconnects, 30 to 1200 A | 87-88 |
| Non-fused UL 508 enclosed disconnects, 16 to 80 A | 89-90 |

## Compact Circuit Protector

### UL 98 Class CF disconnect switches from 30 to 400 A

CCP2 switch up to 100 A
with and without rotary operation mechanisms

200 A CCP2 switch
with and without rotary operation mechanisms

400 A CCP2 switch
with and without rotary operation mechanisms

**Class CF CCP contents** **Section page**


**30, 60 and 100 amp switches**
Descriptions and specifications . . . . . 3-4
Catalog numbers . . . . . 5
Terminal data . . . . . 6
Dimensions . . . . . 6-8
**200 and 400 A switches**
Descriptions and specifications . . . . . 9-10
Catalog numbers and horsepower ratings . . . . . 10
Available lugs . . . . . 10
Dimensions . . . . . 11-12
**Accessories**
Multi-wire lug kits
30, 60 and 100 A switches . . . . . 13
200 and 400 A switches . . . . . 14
Handles and shafts
Selector and pistol handles . . . . . 15
Handle shafts . . . . . 16
NFPA 79 compliant handles . . . . . 16
Flange handle rod and cable operators . . . . . 17
200 and 400 A switches
Front rotary mechanisms . . . . . 18
Side rotary mechanisms . . . . . 18
Terminal shroud kits . . . . . 18
Phase barrier kits . . . . . 18
Handle extension . . . . . 18
Auxiliary contacts
30, 60 and 100 A switches . . . . . 19
200 and 400 A switches . . . . . 20
PLC fuse monitor (30, 60 and 100 A switches) . . . . . 21-22
**How to order**
**30 and 60 A switches**
Switch only . . . . . 23
Front and right side rotary switches . . . . . 24-25
Left side rotary switches . . . . . 26
**100 A switches**
Switch only . . . . . 27
Front and right side rotary switches . . . . . 28-29
Left side rotary switches . . . . . 30
**200 and 400 A switches**
200 A switches . . . . . 32-33
400 A switches . . . . . 34-35

### Catalog symbols for 30, 60 and 100 A switches

| Symbol | Description |
|---|---|
| CCP2-(pole)-(amps)CF | Switch only |
| CCP2R-(pole)-(amps)CF | Right front rotary, clockwise operated switch |
| CCP2RL-(pole)-(amps)CF | Left front rotary, clockwise operated switch |
| CCP2S-(pole)-(amps)CF | Right side rotary, clockwise operated switch |
| CCP2SL-(pole)-(amps)CF | Left side rotary, counterclockwise operated switch |

### Description

The revolutionary, next generation Bussmann™ series Compact Circuit Protector (cat. no. CCP2) is a fused UL® 98 branch circuit disconnect switch utilizing the UL Class CF time-delay or fast-acting CUBEFuse™ with Class J electrical performance. With up to a 51 percent smaller footprint than a traditional fusible solution, these switches provide a high 200 kA SCCR to help improve panel and assembly SCCR.

The 35 mm DIN-Rail mount CCP2 is available in a variety of 30, 60 and 100 amp configurations to meet many application needs including rotary operation.

The switch-only versions of the 30, 60 and 100 A disconnects are direct, drop-in replacements for the earlier models (noted by a catalog number starting "CCP-"). The auxiliary contacts and PLC remote fuse indicator are backwards compatible. The multi-wire lug kits and terminal shrouds are not.

Application flexibility is extended with an optional multi-wire lug kit, featuring finger-safe shrouds, that provides three (30 and 60 A switches) and six (100 A switches) additional wire ports on each pole for power distribution applications.

Other accessories include a PLC fuse monitor for open fuse indication and NO/NC auxiliary contacts that easily integrate into various monitoring systems.

Front and side rotary operated versions are easily applied for through-the-door or through the left or right side operation to enhance safety.

### Ratings

- Volts
  - 347 Vac (1-pole switches)
  - 600 Vac (2- and 3-pole switches)
  - 125 Vdc*
- Amps
  - 30 A
  - 60 A
  - 100 A
- SCCR
  - 200 kA RMS Sym.
  - 100 kA DC

### Poles

- 1-, 2- and 3-poles catalog number dependent

* Switch amp rating and installed fuse amp rating dependent, see catalog number table for details.

### Agency information

- UL 98 Listed, Guide WHTY, File E302370
- cULus to Canadian Standard 22.2 No. 4-04, Guide WHTY7, File E302370
- RoHS compliant
- CE

### Conductors/terminals

- 75°C Cu, see conductor tables for size, type and torque information
- Box lug, single/dual conductor
- Fork terminal suitable for line, load or accessory connection, max. 30 A suitable for use with:
  - 10-24 screw for 30 and 60 A switches
  - 1/4-28 screw for 100 A switches
- Multi-wire lug kits — see accessories for details

### Storage and operating temperature

- -20°C to 75°C (-4°F to 167°F)*

* For fuse performance under or above 25°C, consult fuse performance derating charts in the Bussmann Division publication no. 3002, titled Selecting Protective Devices (SPD)

### Lockout/tagout provisions

- 1/4" lock, direct use on switches without rotary mechanisms requires a lock with a straight shank of sufficient length to engage all poles

### Minimum enclosure size per UL 98*

- 30 and 60 A switch 10"x 8"x 6"(254 x 203 x 152 mm)
- 100 A switch, 12" x 10" x 6" (305 x 254 x 152 mm)

* Smaller enclosures may be used at the discretion of the user, with adherence to NEC minimum wire bend radius requirements.

### Mounting**

- 35 mm DIN-Rail

**Switch is panel mount with flange handle cable operator.

### Local open fuse indication minimum voltage

- 90 Vac, requires an open fuse to be in the CCP2 and the switch in the ON position

### Accessories

- Multi-wire lug kits with terminal shrouds
- Selector and pistol handles for use with rotary operated switches
- 8 mm shafts for use with selector and pistol handles
- Auxiliary contacts
- PLC fuse monitor
- NFPA 79 compliant handle
- Flange handle rod and cable operators

## Features

- Uses UL Class CF time-delay or fast-acting CUBEFuse with Class J electrical performance
- Extremely compact design at 25.4 mm (1 inch) wide per pole
- Amp rating rejection disconnects will not accept a CUBEFuse amp rating greater than switch rating
- High 200 kA short-circuit current rating
- Disconnect rated to provide means for load isolation
- Full voltage rated at 347 Vac (1-pole switches) and 600 Vac (2- and 3-pole switches)
- 125 Vdc* rated to meet specialized applications
- UL 98 Listed and suitable for branch circuit disconnect and branch circuit protection with installed fuses
- Horsepower rated
- Open fuse indication:
  - Local open fuse indication light standard on each pole
  - Optional PLC fuse monitor for wired remote open fuse indication by signaling a PLC and opening a contactor to de-energize all phases, if required
- Additional open fuse indication can be provided by the indicating time-delay CUBEFuse (6 to 100 A)
- Finger-safe construction with 10 AWG (6 $mm^2$) wire or larger
- Built-in switch interlock prohibits removing or installing the fuse while in the ON position
- Padlockable for lockout/tagout procedures with a 1/4″ lock
- Rotary operated versions provide for through-the-door and through-the-side operation flexibility and enhanced safety with:
  - Right or left front operation
  - Right or left side operation
- Optional selector and pistol handles, and shafts available for use with rotary operated versions
- Multi-wire lug kits with terminal shrouds allow for power distribution to multiple loads. Each lug has three (30 and 60 A switches) or six (100 A switches) ports rated for single and dual wires (see lug kits in accessories for details).

* Switch amp rating and installed fuse amp rating dependent, see catalog number table for details.

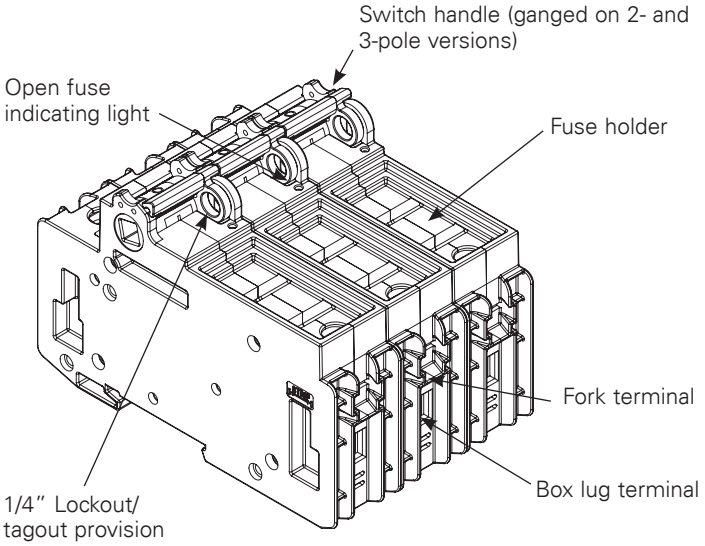

Right front rotary operated CCP2 switch with PLC fuse monitor.

### Rotary operating versions

**Left front**

Uses clockwise handles

**Right front**

Uses clockwise handles

**Left side**

Uses counterclockwise handles

**Right side**

Uses clockwise handles

## 30, 60 and 100 A switch catalog numbers

| Catalog no. | Poles | Description/switch operation | Volts | SCCR | Max Hp rating (Vac) 120 | 240 | 480 | 600 |
|---|---|---|---|---|---|---|---|---|
| **30 amp switches** | | | | | | | | |
| CCP2-1-30CF | 1 | Switch only | 347 Vac/125 Vdc | 200 kA AC 100 kA DC | 1-1/2 | — | — | — |
| CCP2-2-30CF | 2 | | 600 Vac/125 Vdc | | — | 3 | — | — |
| CCP2-3-30CF | 3 | | 600 Vac | | — | 5 | 15 | 10 |
| CCP2R-2-30CF | 2 | Right front rotary, clockwise | 600 Vac/125 Vdc | | — | 3 | — | — |
| CCP2R-3-30CF | 3 | | 600 Vac | | — | 5 | 15 | 10 |
| CCP2RL-2-30CF | 2 | Left front rotary, clockwise | 600 Vac/125 Vdc | | — | 3 | — | — |
| CCP2RL-3-30CF | 3 | | 600 Vac | | — | 5 | 15 | 10 |
| CCP2S-2-30CF | 2 | Right side rotary, clockwise | 600 Vac/125 Vdc | | — | 3 | — | — |
| CCP2S-3-30CF | 3 | | 600 Vac | | — | 5 | 15 | 10 |
| CCP2SL-2-30CF | 2 | Left side rotary, counterclockwise | 600 Vac/125 Vdc | | — | 3 | — | — |
| CCP2SL-3-30CF | 3 | | 600 Vac | | — | 5 | 15 | 10 |
| **60 amp switches** | | | | | | | | |
| CCP2-1-60CF | 1 | Switch only | 347 Vac/125 Vdc* | 200 kA AC 100 kA DC | 3 | — | — | — |
| CCP2-2-60CF | 2 | | 600 Vac/125 Vdc* | | — | 7-1/2 | — | — |
| CCP2-3-60CF | 3 | | 600 Vac | | — | 7-1/2 | 20 | 10 |
| CCP2R-2-60CF | 2 | Right front rotary, clockwise | 600 Vac/125 Vdc* | | — | 7-1/2 | — | — |
| CCP2R-3-60CF | 3 | | 600 Vac | | — | 7-1/2 | 20 | 10 |
| CCP2RL-2-60CF | 2 | Left front rotary, clockwise | 600 Vac/125 Vdc* | | — | 7-1/2 | — | — |
| CCP2RL-3-60CF | 3 | | 600 Vac | | — | 7-1/2 | 20 | 10 |
| CCP2S-2-60CF | 2 | Right side rotary, clockwise | 600 Vac/125 Vdc* | | — | 7-1/2 | — | — |
| CCP2S-3-60CF | 3 | | 600 Vac | | — | 7-1/2 | 20 | 10 |
| CCP2SL-2-60CF | 2 | Left side rotary, counterclockwise | 600 Vac/125 Vdc* | | — | 7-1/2 | — | — |
| CCP2SL-3-60CF | 3 | | 600 Vac | | — | 7-1/2 | 20 | 10 |
| **100 amp switches** | | | | | | | | |
| CCP2-1-100CF | 1 | Switch only | 347 Vac/125 Vdc** | 200 kA AC 100 kA DC | 5 | — | — | — |
| CCP2-2-100CF | 2 | | 600 Vac/125 Vdc** | | — | 10 | — | — |
| CCP2-3-100CF | 3 | | 600 Vac | | — | 20 | 50 | 40 |
| CCP2R-2-100CF | 2 | Right front rotary, clockwise | 600 Vac/125 Vdc** | | — | 10 | — | — |
| CCP2R-3-100CF | 3 | | 600 Vac | | — | 20 | 50 | 40 |
| CCP2RL-2-100CF | 2 | Left front rotary, clockwise | 600 Vac/125 Vdc** | | — | 10 | — | — |
| CCP2RL-3-100CF | 3 | | 600 Vac | | — | 20 | 50 | 40 |
| CCP2S-2-100CF | 2 | Right side rotary, clockwise | 600 Vac/125 Vdc** | | — | 10 | — | — |
| CCP2S-3-100CF | 3 | | 600 Vac | | — | 20 | 50 | 40 |
| CCP2SL-2-100CF | 2 | Left side rotary, counterclockwise | 600 Vac/125 Vdc** | | — | 10 | — | — |
| CCP2SL-3-100CF | 3 | | 600 Vac | | — | 20 | 50 | 40 |

* 125 Vdc for installed fuse amp ratings up to 40 A. 24 Vdc for installed fuse amp ratings from 45 to 60 A.
**125 Vdc for installed fuse amp ratings up to 80 A, 24 Vdc for installed fuse amp ratings from 90 to 100 A.

## Box lug terminal conductor data

| Wire type | AWG range | Class | Quantity | Torque N•m (lb-in) |
|---|---|---|---|---|
| **30 and 60 A switches** | | | | |
| 75°C Cu | 4-6 | Stranded, Class B to K | Single | 3.95 (35) |
| | 8-18 | | | 2.26 (20) |
| | 6-8 | Stranded, Class B/C | Dual | 3.39 (30) |
| | | Stranded, Class K | | 2.26 (20) |
| | 10-18 | Stranded, Class B to K | | |
| | 10-18 | Solid | Single/dual | 2.26 (20) |
| | 4-18 | Stranded, UL ferrule, Class B/C | Single | 3.39 (30) |
| | 6-18 | | Twin† | |
| | 4-18 | Stranded, UL ferrule, Class K | Single | 2.82 (25) |
| | 6-18 | | Twin† | |
| **100 A switches** | | | | |
| 75°C Cu | 12-18 | Stranded, Class B/C | Single | 2.26 (20) |
| | 10 | | | 2.82 (25) |
| | 8 | | | 4.52 (40 |
| | 4-6 | | | 5.08 (45) |
| | 1-3 | | | 6.21 (55) |
| | 4-12 | | Dual | 5.08 (45) |
| | 12-18 | Stranded, UL ferrule, Class B/C | Single | 2.26 (20) |
| | 10 | | | 3.95 (35) |
| | 1-8 | | | 4.52 (40) |
| | 10-18 | | Twin† | 2.26 (20) |
| | 6-9 | | | 2.82 (25) |
| | 10-18 | Solid | Single/Dual | 2.26 (20) |
| | 8-18 | Class K | Single | 2.26 (20) |
| | 1-7 | | | 3.39 (30) |
| | 3-10 | | Dual | 5.08 (45) |
| | 8-18 | Class K, UL ferrule | Single | 2.26 (20) |
| | 1-7 | | | 3.39 (30) |
| | 6-18 | | Twin | 2.26 (20) |

† Two stranded conductors placed in one UL Listed twin ferrule.

## Lineside and loadside fork terminal

- Fork terminal suitable for line, load or accessory connection, max. 30 A suitable for use with:
  - 10-24 screw for 30 and 60 A switches
  - 1/4-28 screw for 100 A switches

## Available Bussmann series fuses

| UL fuse class | Type/description | Volts | Data sheet no. |
|---|---|---|---|
| CF | Indicating time-delay, Low-Peak™ CUBEFuse (6-100 A) | 600 Vac/ 300 Vdc | 9000 |
| | Non-indicating time-delay, Low-Peak CUBEFuse (1-100 A) | | |
| | Non-indicating fast-acting CUBEFuse (1-100 A) | 600 Vac/dc | 2147 |

## Dimensions – mm (in)

**Switch** (shown with optional terminal shrouds)

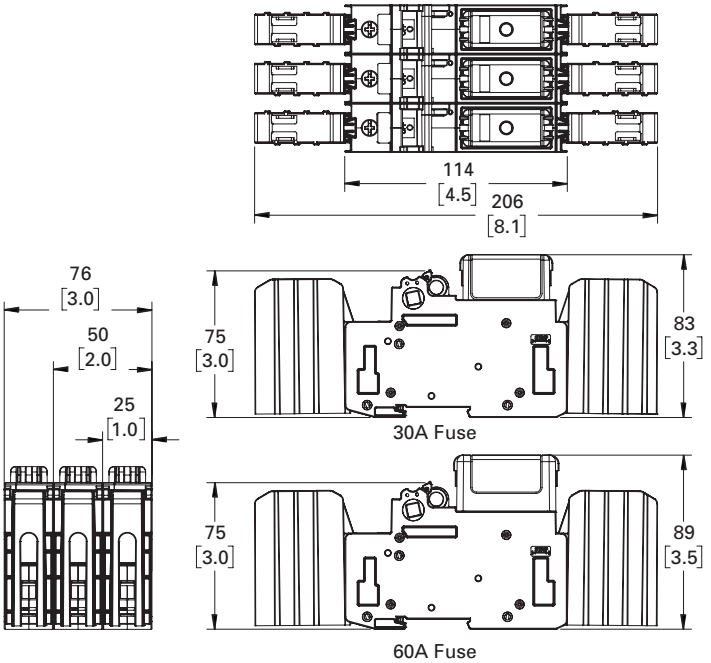


**30 and 60 amp switches**

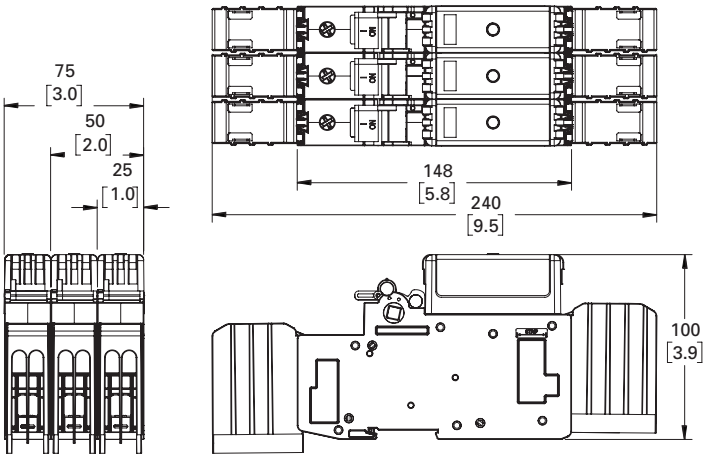


**100 amp switches**

**Left front rotary switches** (shown with optional terminal shrouds)

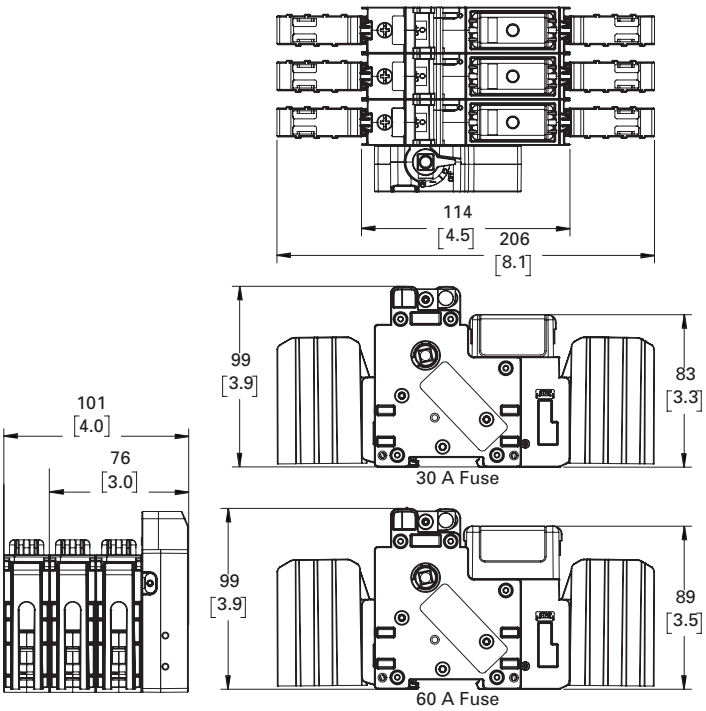


**30 and 60 amp switches**

**Right front rotary switches** (shown with optional terminal shrouds)

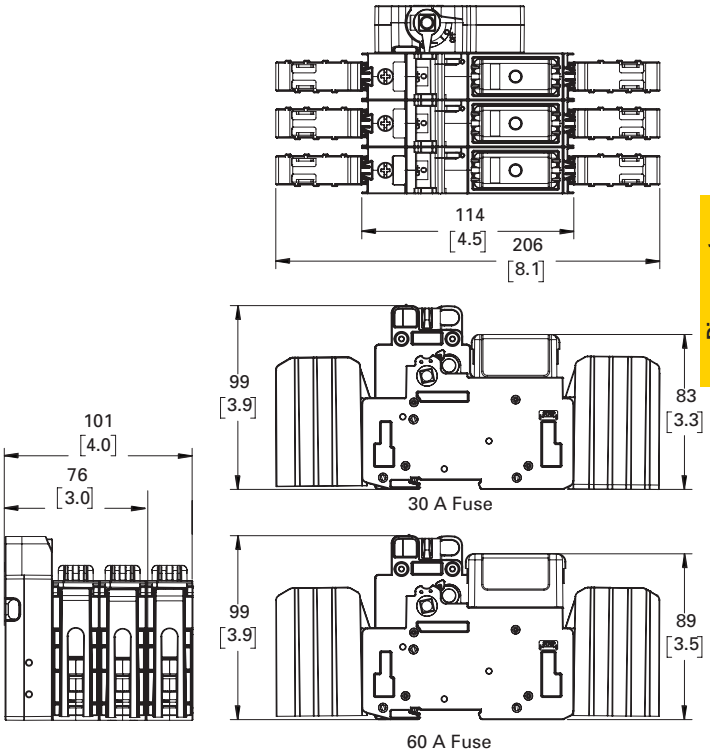


**30 and 60 amp switches**

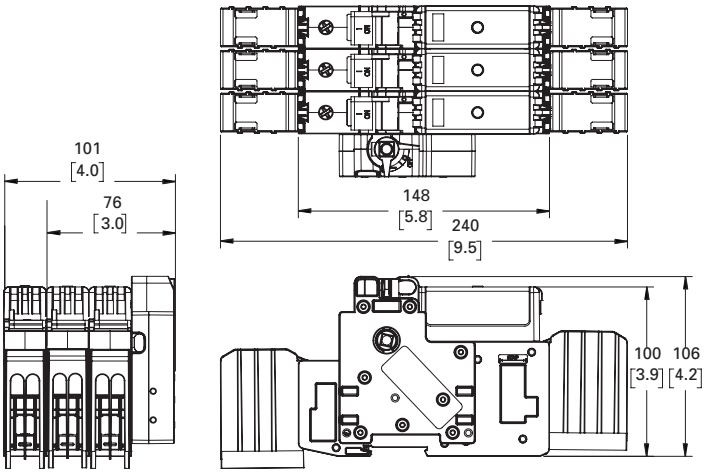


**100 amp switches**

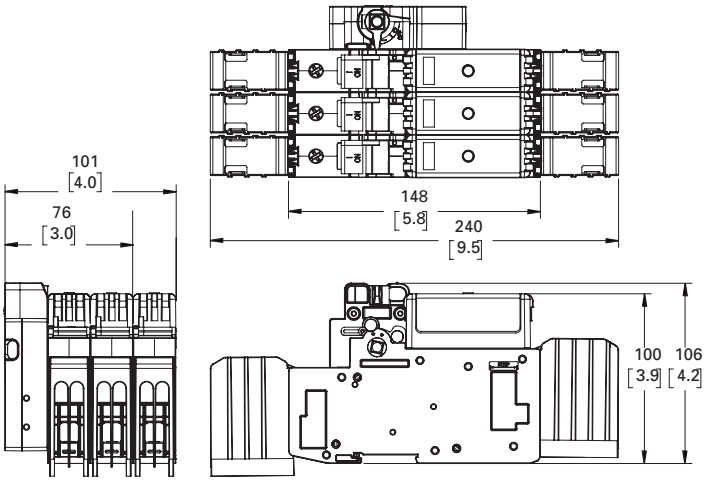


**100 amp switches**

**Left side rotary switches** (shown with optional terminal shrouds)

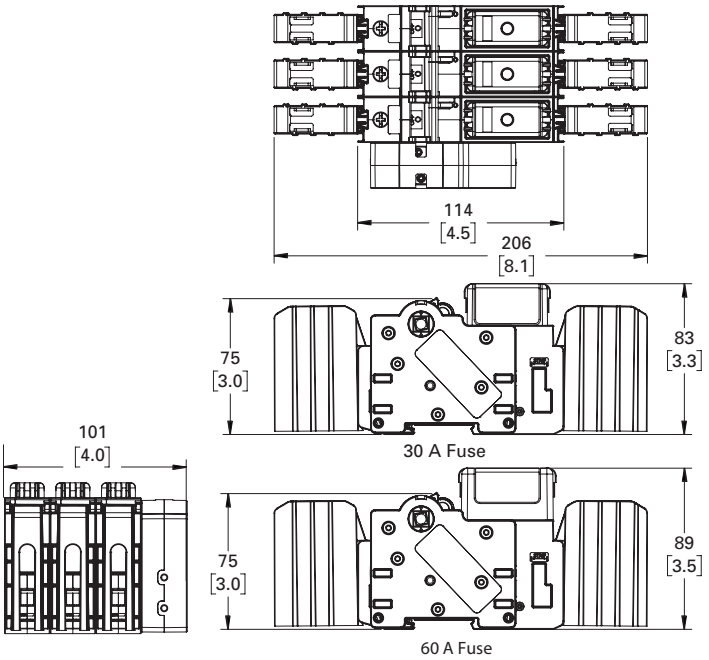


**30 and 60 amp switches**

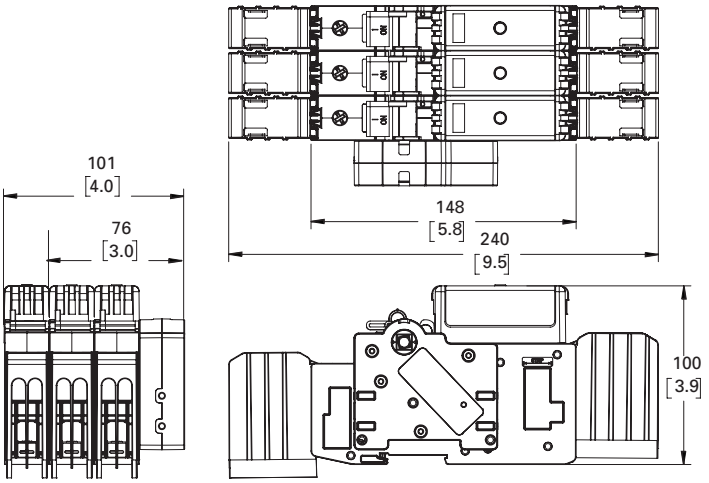


**100 amp switches**

**Right side rotary switches** (shown with optional terminal shrouds)

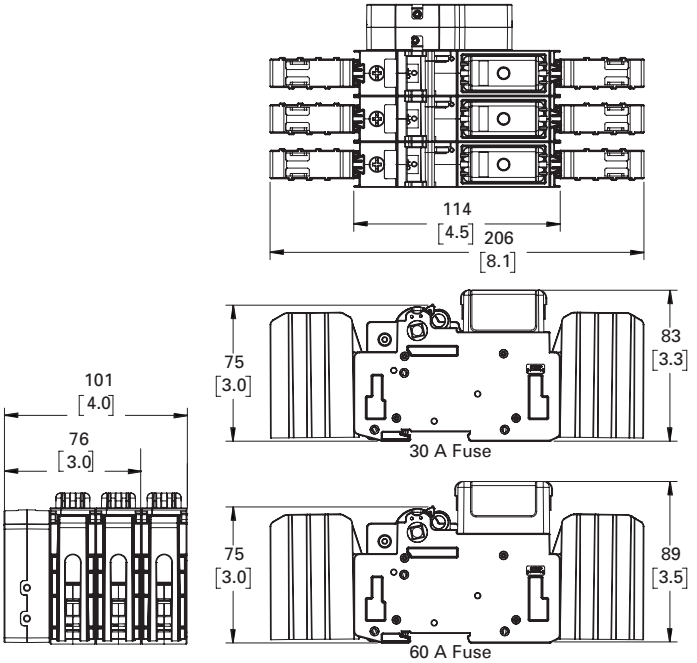


**30 and 60 amp switches**

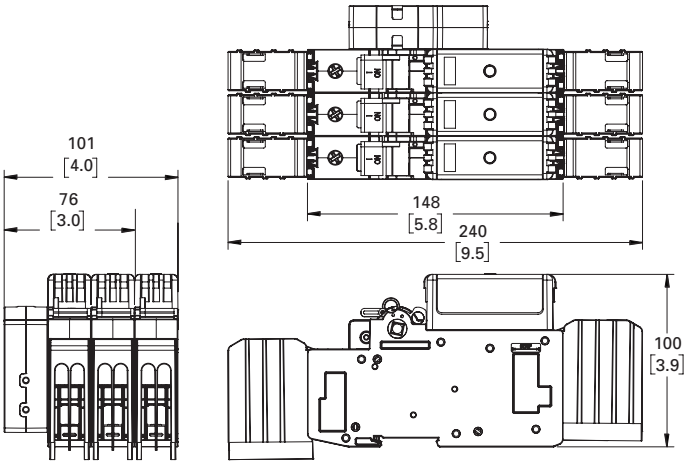


**100 amp switches**

## 200 and 400 A switches

200 A switch

400 A switch

With front rotary accessory

With side rotary accessory

| Catalog no. | Poles | Amps | Description |
|---|---|---|---|
| CCP2-1-200CF | 1 | 200 | Switch only |
| CCP2-2-200CF | 2 | | |
| CCP2-3-200CF | 3 | | |
| CCP2-1-400CF | 1 | 400 | |
| CCP2-2-400CF | 2 | | |
| CCP2-3-400CF | 3 | | |

### Description

The Bussmann series 200 and 400 A Compact Circuit Protector (CCP2) fused disconnect switches utilize the finger-safe UL Class CF time-delay CUBEFuse with Class J electrical performance. With up to a 69 percent smaller footprint than a traditional fusible solution, these switches provide a high 200 kA SCCR to help improve panel and assembly SCCR.

The panel mount 200 and 400 A CCP2 switches are available with a variety of accessories to meet many application needs including rotary and flange handle operation.

Rotary operators are available for front or side (right or left) operation. Front rotary operators are for three-pole switches only while the side operator may be applied to the right or left side of 1-, 2- and 3-pole units.

Other accessories include lugs, terminal shrouds, rotary pistol handles, flange rod and cable operating mechanisms, NO/NC auxiliary contacts that easily integrate into various monitoring systems and a handle extension.

Front and side rotary operated versions are easily applied for through-the-door or through the left or right side operation to enhance safety.

### Ratings

- Volts
  - 347 Vac (1-pole) 600 Vac (2- and 3-pole)
- Amps
  - 200 A
  - 400 A
- SCCR
  - 200 kA RMS Sym.

### Poles

- 1-, 2- and 3-poles catalog number dependent

### Agency information

- UL 98 Listed, Guide WHTY, File E302370
- cULus to Canadian Standard 22.2 No. 4-04, Guide WHTY7, File E302370
- RoHS compliant

### Conductors/terminals

- See available lug table for size, type and torque information

### Storage and operating temperature

- -20°C to 75°C (-4°F to 167°F)*

* For fuse performance under or above 25°C, consult fuse performance derating charts in the Bussmann Division publication no. 3002, titled Selecting Protective Devices (SPD)

### Lockout/tagout provisions using 1/4" lock

- Integral with switch handle
- Front rotary operating mechanism
- Rotary pistol handles
- Flange rod and cable operators

### Minimum enclosure size

- 200 A switch 16 x 12 x 6" (405 x 305 x 150 mm)
- 400 A switch 24 x 16 x 8 (610 x 405 x 200 mm)

### Mounting

- Panel mount

### Local open fuse indication minimum voltage

- 90 Vac, requires an open fuse to be in the CCP2 and the switch in the ON position

### Accessories

- Lugs and lug kits with terminal shrouds
- Pistol handles for use with rotary operated switches
- NFPA 79 compliant handle
- 12 mm shafts for use with selector and pistol handles
- Auxiliary contacts
- Flange handle rod and cable operators

## Features

- Uses UL Class CF time-delay CUBEFuse with Class J electrical performance
- Amp rating rejection feature will not accept a CUBEFuse amp ratings greater than switch rating
- High 200 kA short-circuit current rating
- Disconnect rated to provide means for load isolation
- Full voltage rated at 600 Vac
- UL 98 Listed and suitable for branch circuit disconnect and branch circuit protection with installed fuses
- Horsepower rated (see table below)
- Standard local open fuse indication light on each pole speeds troubleshooting
- Built-in switch interlock prevents inserting or removing fuse while in the ON position
- Padlockable for lockout/tagout procedures with a 1/4" lock
- Front and side rotary operator accessories provide for through-the-door and through-the-side operation flexibility and enhanced safety
- Optional pistol handles and shafts available for use with rotary operator accessories
- Multi-wire lug kits with terminal shrouds allow for power distribution to multiple loads.

## Catalog numbers and horsepower ratings

| Catalog no. | Poles | Description | Volts AC | SCCR | Max Hp rating (Vac) 240 | 480 | 600 |
|---|---|---|---|---|---|---|---|
| **200 amp switches** | | | | | | | |
| CCP2-1-200CF | 1 | Switch only | 347 | 200 kA | — | — | — |
| CCP2-2-200CF | 2 | | 600 | | 10 | — | — |
| CCP2-3-200CF | 3 | | | | 50 | 100 | 150 |
| **400 amp switches** | | | | | | | |
| CCP2-1-400CF | 1 | Switch only | 347 | 200 kA | — | — | — |
| CCP2-2-400CF | 2 | | 600 | | — | — | — |
| CCP2-3-400CF | 3 | | | | 100 | 200 | 250 |

## Available lugs, conductor ratings and terminal torques

| Catalog no. | Description | Lugs per cat. no. | Wire range AWG (mm²) | Wire type/ temp. | Conductor torque N•m (lb-in) | Lug mounting screw torque N•m (lb-in) |
|---|---|---|---|---|---|---|
| **200 A switches** | | | | | | |
| CCP2-L2-1 | Stainless steel lug | 1 | 350-4 (185-25) | Cu 75°C | 20.3 (180) | 0.9 (8) |
| CCP2-L2-1A | Aluminum lug* | 1 | 350-4 (185-25) | Cu/Al 75°C | 28.2 (250) | 13.5 (120) |
| CCP2-MW2-3 | 3-port multi-wire terminal with shroud* | 3 | 2-14 (35-2.5) | Cu/Al 75°C | 7.9 (70) | 10.8 (95) |
| CCP2-MW2-6 | 6-port multi-wire terminal with shroud* | 3 | 6-14 (16-2.5) | Cu/Al 75°C | 2.8 (25) | 10.8 (95) |
| * These lugs also accept 1/4" quick connect control wire terminals. Order catalog number CCP2-CWK2 (package of 12 terminals). | | | | | | |
| **400 A Switches** | | | | | | |
| CCP2-L4-1 | Stainless steel lug | 1 | 500-3 (240-35) | Cu 75°C | 42.0 (375) | 22.0 (200) |
| CCP2-L4-1A | Aluminum lug | 1 | 500-3 (240-35) | Cu/Al 75°C | 42.0 (375) | |
| CCP2-L4B-3 | Stainless steel lug kit with shroud | 3 | 750-500 (400-240) | Cu 75°C | 57.0 (500) | |
| CCP2-L4B-3A | Aluminum lug kit with shroud | 3 | 750-500 (400-240) | Cu/Al 75°C | 62.0 (550) | |
| CCP2-L6-3 | 2-port stainless steel lug kit with shroud | 3 | (2) 500-2 (240-35) | Cu 75°C | 42.0 (375) | |
| CCP2-L6-3A | 2-port aluminum lug kit with shroud | 3 | (2) 500-2 (240-25) | Cu/Al 75°C | 42.0 (375) | |
| CCP2-MW6-6 | 6-port multi-wire terminal with shroud | 3 | 1/0-14 (50-2.5) | Cu/Al 75°C | 10-14 = 3.9 (35)<br>8 = 4.5 (40)<br>4-6 = 5.0 (45<br>1/0-2 = 5.6 (50) | |

## Accessories

| Catalog no. | Switch amps | Description |
|---|---|---|
| CCP2-TS2-3 | 200 | 3-pole terminal shroud |
| CCP2-PB2 | | Phase barriers (pack of 2) |
| CCP2-RM2 | | Front rotary operator* (3-pole switch only) |
| CCP2-TS6-3 | 400 | 3-pole terminal shroud |
| CCP2-PB6 | | Phase barriers (pack of 2) |
| CCP2-RM4 | | Front rotary operator* (3-pole switch only) |
| CCP2-SM | 200/400 | Side rotary operator* (1-, 2- or 3-pole switches) |

* Complete installation requires pistol handle and shaft, order separately.

**200 amp switch dimensions — mm (in)**

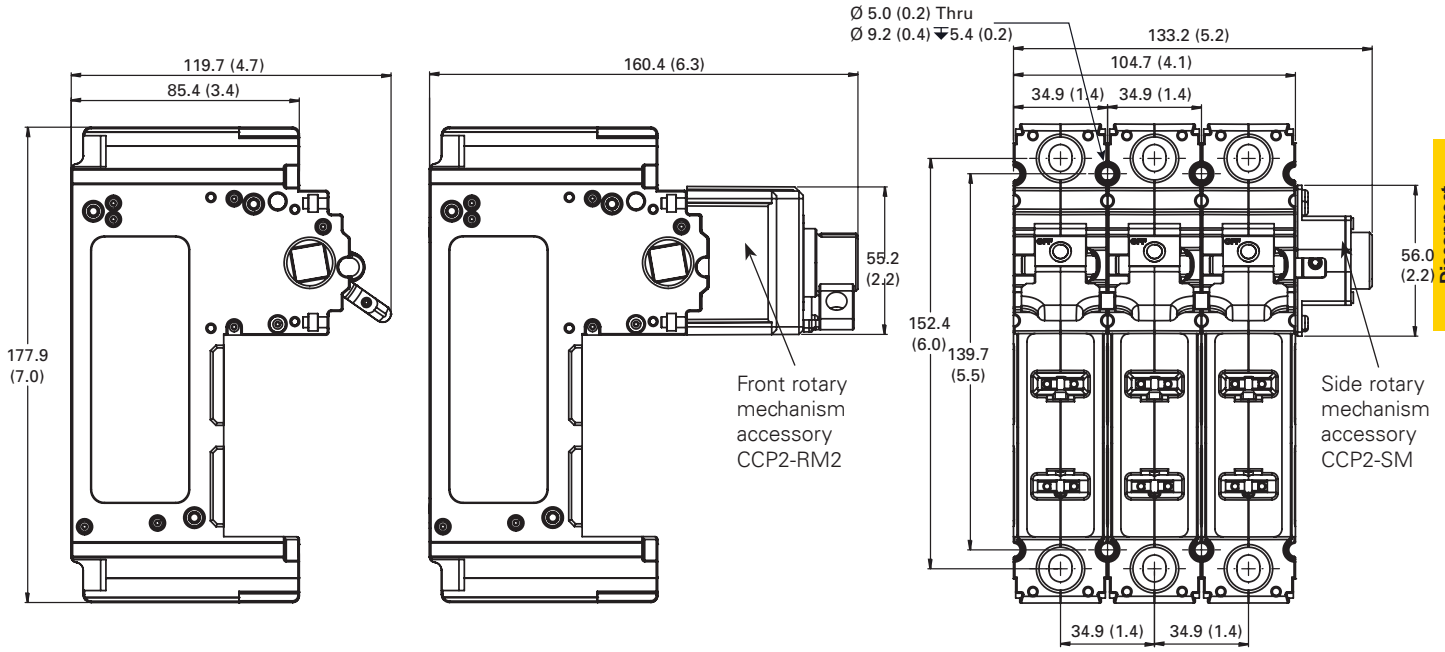


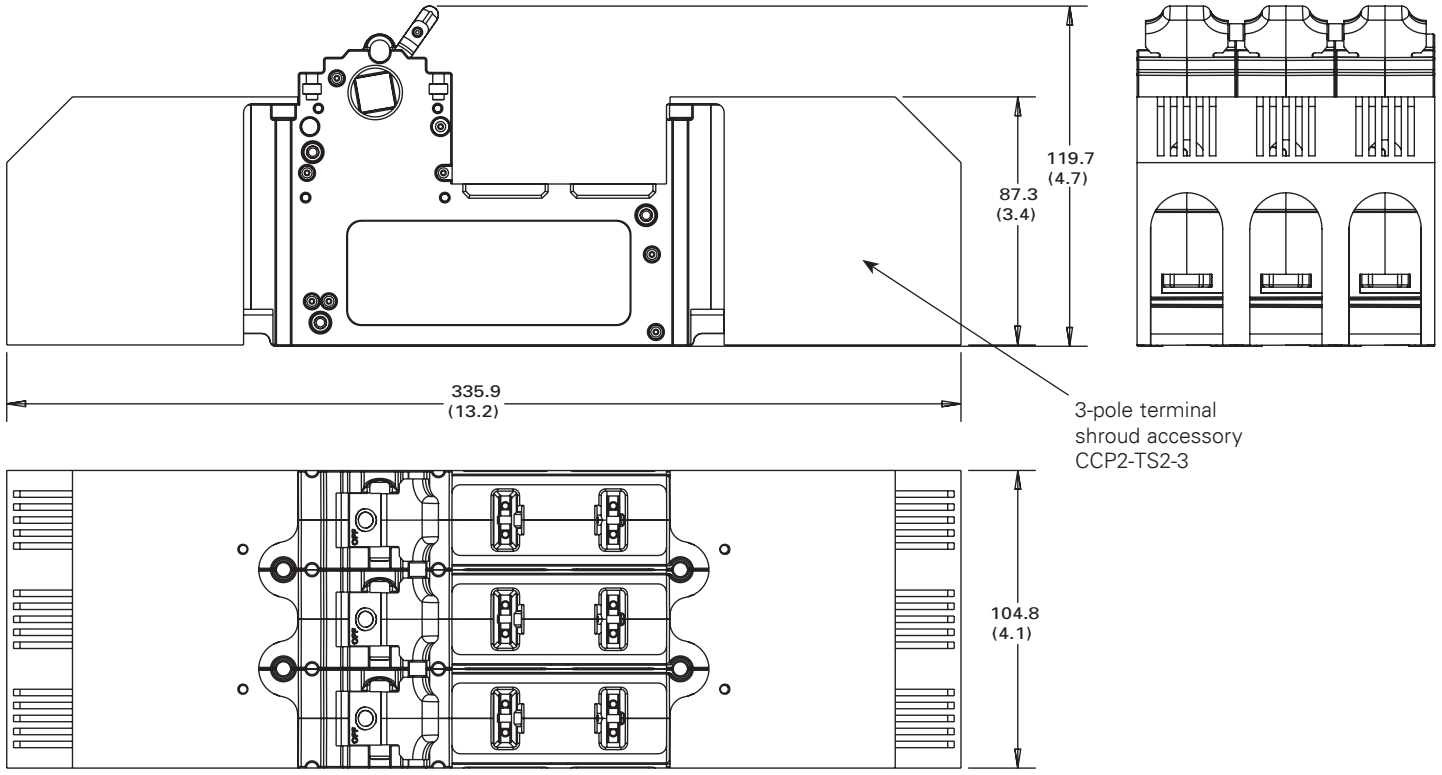

**400 amp switch dimensions — mm (in)**

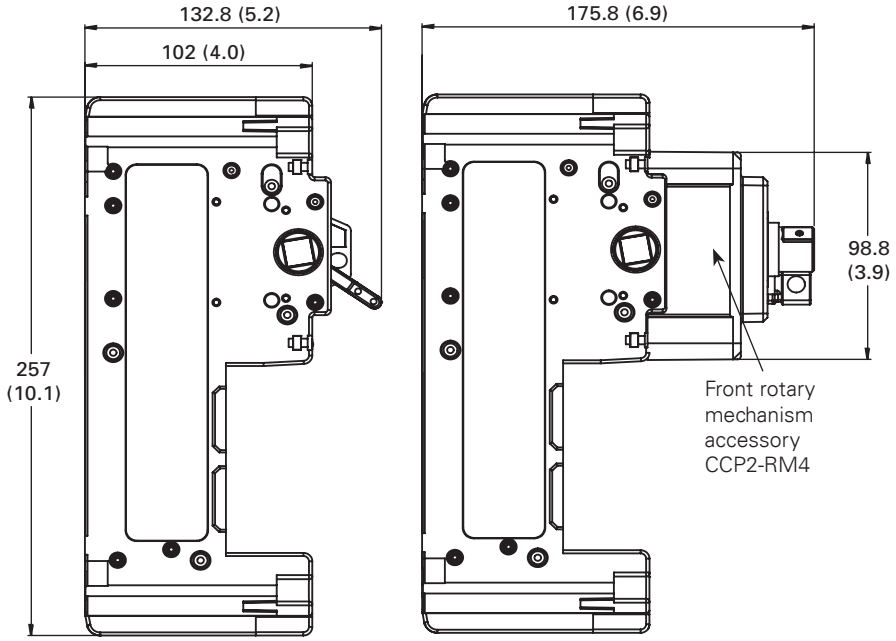


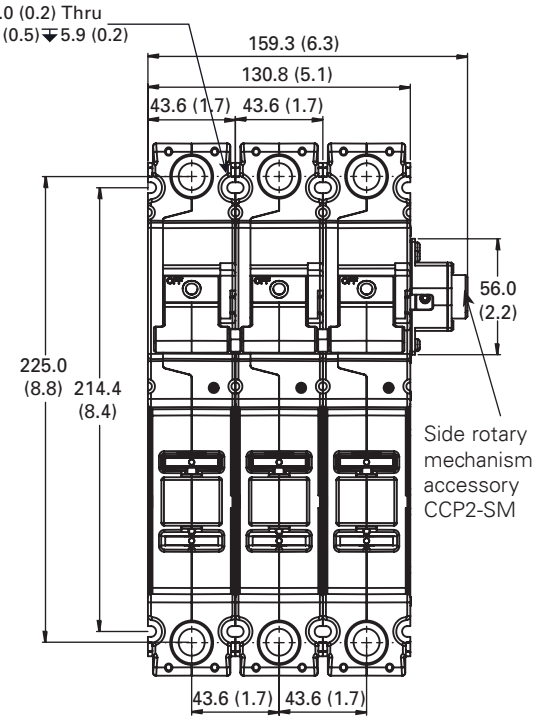


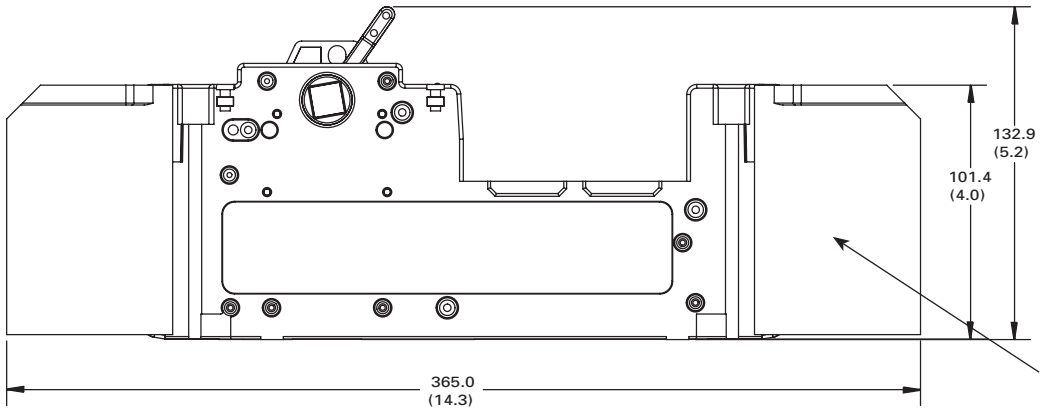


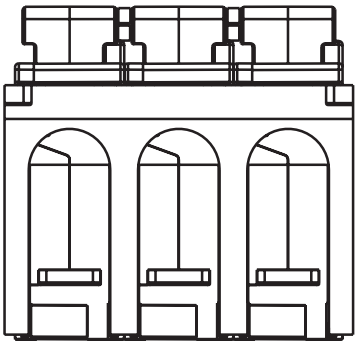

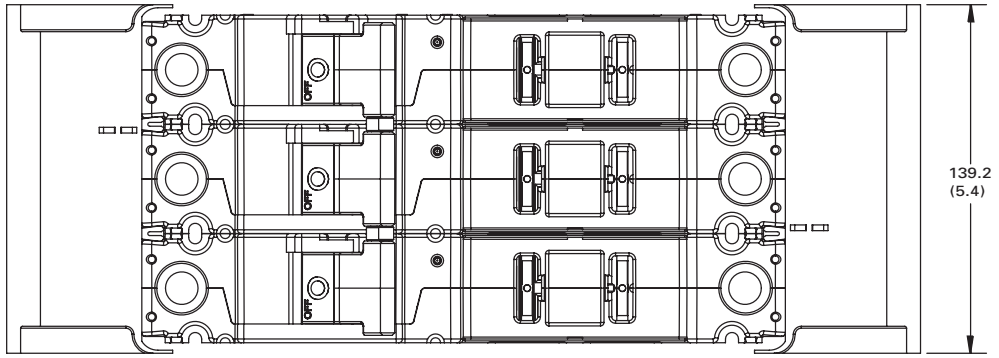

## 30, 60 and 100 A switch multi-wire lug kits

### Catalog numbers

- CCP2-MW1-3 (30 and 60 A switches only)
- CCP2-MW1-6 (100 A switches only)

### Description

The multi-wire lug kits permit expanding each box lug terminal on the switch into a three-port (30 and 60 A switches) or six-port (100 A switches) terminal for power distribution applications.

Each multi-wire lug kit comes with three lugs and three terminal shrouds. Shrouds provide finger-safe protection when properly installed.

Lugs may be mounted on either the loadside or lineside to meet various application needs.

Ports on any one lug accept any conductor combination listed, e.g., one of the ports may have dual 14 AWG wires and the other two ports single 10 AWG wires.

### Ratings

- Volts 600 V
- Amps
  - 60 A max (CCP2-MW1-3)
  - 100 A max (CCP2-MW1-6)
- SCCR 200 kA

### Agency information

- UL Recognized, Guide WHTY2, File E302370
- RoHS compliant

### Storage and operating temperature

- -20°C to 75°C (-4°F to 167°F)

### Multi-wire lug conductor information

- 75°C Cu/AL
- AWG size and quantity per port - see table below

| Type | AWG range | Class | Quantity | Torque N•m (lb-in) |
|---|---|---|---|---|
| Cu/Al | 4-6 | Stranded, Class B/C | Single | 3.95 (35) |
| | 8 | | | 2.82 (25) |
| Cu | 10-14 | Stranded, Class B/C | Single/dual* | 2.26 (20) |
| | 10-14 | Solid | Single | 2.26 (20) |
| | 8 | UL ferrule, Class B to K | Single/twin† | 2.82 (25) |
| | 10-14 | | | 2.26 (20) |

* Dual wire to be same size and type.
† Two stranded conductors placed in one UL Listed twin ferrule.

### CCP2 box lug torque for multi-wire lugs

- 30/60 A switch lug, 4.52 N•m (40 lb-in)
- 100 A switch lug, 5.09 N•m (45 lb-in)

### Installed on CCP2-3-xx

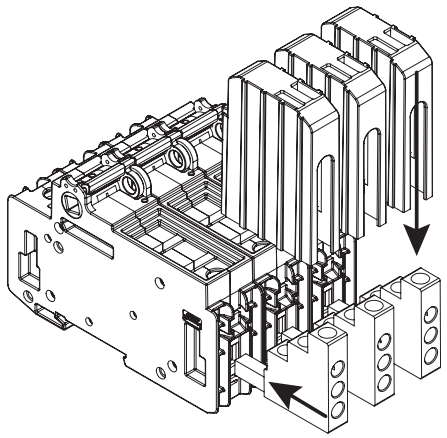

Multi-wire lugs mount in switch box lug terminals to provide three additional wire ports per pole. Lugs can be mounted on the switch lineside or loadside. Each multi-wire lug kit comes with three lugs and three shrouds.

### Wire insulation strip lengths

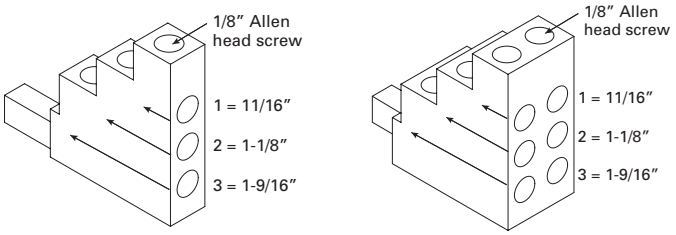


Strip back wire insulation to the lengths as indicated in the illustration above and the table below.

| Lug port | Strip wire insulation back (inch) |
|---|---|
| 1 | 11/16 |
| 2 | 1-1/8 |
| 3 | 1-9/16 |

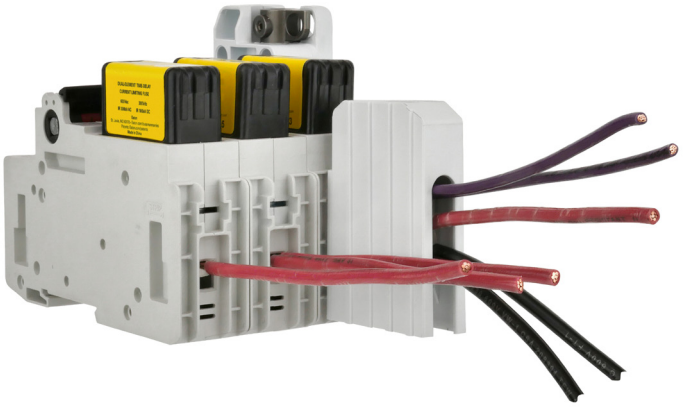

Wiring versatility is provided by single/dual rated box lug terminals on the switch, or by the three-port or six-port multi-wire lug kits that are also single/dual wire rated.

## 200 and 400 A switch multi-wire lug kits

### Catalog numbers

- CCP2-MW2-3 ( 3-port, 200 A switches only)
- CCP2-MW2-6 (6-port, 200 A switches only)
- CCP2-MW6-6 (6-port, 400 A switches only)

### Description

The multi-wire lug kits permit expanding the terminal on the switch into a three-port (200 A switches) or six-port (200 and 400 A switches) terminal for power distribution applications.

Each multi-wire lug kit comes with three lugs and a 3-pole terminal shroud. The shroud provides finger-safe protection when properly installed.

Lugs can only be mounted on loadside to meet application needs.

Ports on any one lug accept any conductor combination listed, e.g., one of the ports may have dual 14 AWG wires and the other two ports single 10 AWG wires.

### Ratings

- Volts 600 V
- Amps
  - 225 A max (CCP2-MW2-3 and CCP2-MW2-6)
  - 600 A max (CCP2-MW6-6)
- SCCR 200 kA

### Agency information

- UL Recognized, Guide WHTY2, File E302370
- RoHS compliant

### Storage and operating temperature

- -20°C to 75°C (-4°F to 167°F)

### Multi-wire lug conductor information

- 75°C Cu/AL
- AWG size and quantity per port - see table below

| Type | AWG range | Class | Quantity | Torque N•m (lb-in) |
|---|---|---|---|---|
| Cu/Al | 4-6 | Stranded, Class B/C | Single | 3.95 (35) |
| | 8 | | | 2.82 (25) |
| Cu | 10-14 | Stranded, Class B/C | Single/dual* | 2.26 (20) |
| | 10-14 | Solid | Single | 2.26 (20) |
| | 8 | UL ferrule, Class B to K | Single/twin† | 2.82 (25) |
| | 10-14 | | | 2.26 (20) |

* Dual wire to be same size and type.
† Two stranded conductors placed in one UL Listed twin ferrule.

### Installed on CCP2-3-xx

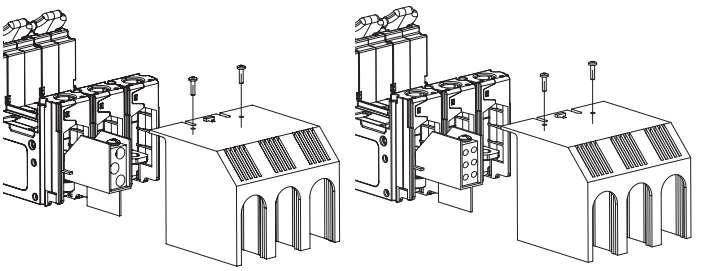

### 3- and 6-port multi-wire lugs mounted on 200 A switches

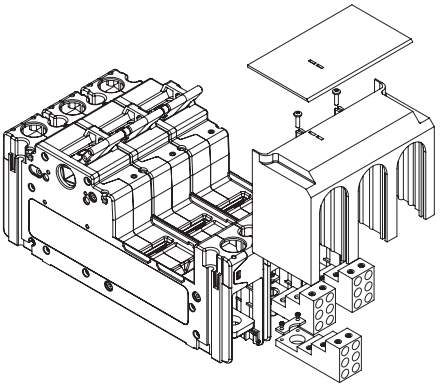

### 6-port multi-wire lugs mounted on 400 A switches

Multi-wire lugs mount on the switch terminals to provide three or six additional wire ports per pole. Lugs to be mounted only on the loadside. Each multi-wire lug kit comes with three lugs, a shroud and mounting hardware.

### Wire insulation strip lengths

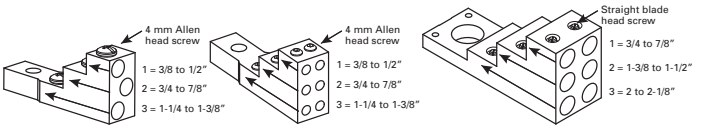


CCP2-MW2-3 CCP2-MW2-6 CCP2-MW6-6

Strip back wire insulation to the lengths indicated in the illustration above and the table below.

| | Wire insulation strip length (inch) | | |
|---|---|---|---|
| Lug kit | Lug port 1 | Lug port 2 | Lug port 3 |
| CCP2-MW2-3 | 3/8 to 1/2 | 3/4 to 7/8 | 1-1/4 to 1-3/8 |
| CCP2-MW2-6 | | | |
| CCP2-MW6-6 | 3/4 to 7/8 | 1-3/8 to 1-1/2 | 2 to 2-1/8 |

## Selector and pistol handles

### Catalog symbol

- CCP2-H4X-_1 (selector handle for 30, 60 and 100 A switches)
- CCP2-H4X-_2 (pistol handle for 30, 60 and 100 A switches)
- CCP2-H4X-_3 (short pistol handle for 200 and 400 A switches)
- CCP2-H4X-_4 (long pistol handle for 200 and 400 A switches)

### Description

Selector and pistol handles are used with rotary operated switches. Pistol handles for 200 and 400 A switches come in short and long versions. All handles are available in black/gray and red/yellow colors, and clockwise/counterclockwise operating modes. Front and right side operated switches use clockwise handles while left side operated switches use counterclockwise handles.

Installation requires an 8 mm shaft for 30, 60 and 100 A switches and a 12 mm shaft for 200 and 400 A switches (ordered separately).

Each handle is rated Type 1, 4X and 12, and accepts up to three (3) 1/4" diameter shank locks for lockout/tagout in the OFF position. They can also be field configured for lock-on and are defeatable.

Only the clockwise operating handles in combination with front rotary operating switches provide a door interlock means to ensure the enclosure door remains shut during lockout/tagout or lock-on. Rotary handles mounted on the enclosure's left or right side do NOT provide a door interlock means.

See the catalog number table below for applicable rotary switch, handle and shaft combinations.

**Selector handles** **Pistol handles —short and long**

### Agency information

- UL Listed, Guide DIHS/DIHS7, File E140305
- Type 1, 4X and 12
- RoHS compliant
- CE

### Storage and operating temperature

- -20°C to 75°C (-4°F to 167°F)



### Handles and shafts for 30, 60 and 100 A switches

| For catalog no. | Description/operation | Order handle cat. no. | Order either 8 mm shaft cat. no. |
|---|---|---|---|
| CCP2R-(pole)-30CF | Right front rotary, clockwise | CCP2-H4X-B1 (selector, black/grey)<br>CCP2-H4X-R1(selector, red/yellow)<br>CCP2-H4X-B2 (pistol, black/grey)<br>CCP2-H4X-R2 (pistol, red/yellow) | CCP2-SH1-290 (11.5"/290 mm)<br>CCP2-SH1-490 (19.3"/490 mm) |
| CCP2R-(pole)-60CF | | | |
| CCP2R-(pole)-100CF | | | |
| CCP2RL-(pole)-30CF | Left front rotary, clockwise | | |
| CCP2RL-(pole)-60CF | | | |
| CCP2RL-(pole)-100CF | | | |
| CCP2S-(pole)-30CF | Right side rotary, clockwise | | |
| CCP2S-(pole)-60CF | | | |
| CCP2S-(pole)-100CF | | | |
| CCP2SL-(pole)-30CF | Left side rotary, counterclockwise | CCP2-H4X-B1L (selector, black/grey)<br>CCP2-H4X-R1L (selector, red/yellow)<br>CCP2-H4X-B2L (pistol, black/grey)<br>CCP2-H4X-R2L (pistol, red/yellow) | |
| CCP2SL-(pole)-60CF | | | |
| CCP2SL-(pole)-100CF | | | |

### Handles and shafts for 200 and 400 A switches

| For catalog no. | Order front rotary mechanism cat. no. | Order right/ left side rotary mechanism cat. no. | Order front/right side clockwise handle cat. no. | Order left side counterclockwise handles (use only with CCP2-SM) cat. no. | Order either 12 mm shaft cat. no. |
|---|---|---|---|---|---|
| CCP2-(poles)-200CF | CCP2-RM2* | CCP2-SM | CCP2-H4X-B3 (short - black/grey)<br>CCP2-H4X-R3 (short - red/yellow) | CCP2-H4X-B3L (short - black/grey)<br>CCP2-H4X-R3L (short - red/yellow) | CCP2-SH2-225 (8.9"/225 mm) |
| CCP2-(poles)-400CF | CCP2-RM4* | | CCP2-H4X-B4 (long - black/grey)<br>CCP2-H4X-R4 (long - red/yellow) | CCP2-H4X-B4L (long - black/grey)<br>CCP2-H4X-R4L (long - red/yellow) | CCP2-SH2-425 (16.7"/425 mm) |

* For three-pole switches only.

### Handle dimensions — mm (in)

### Selector for 8 mm shafts

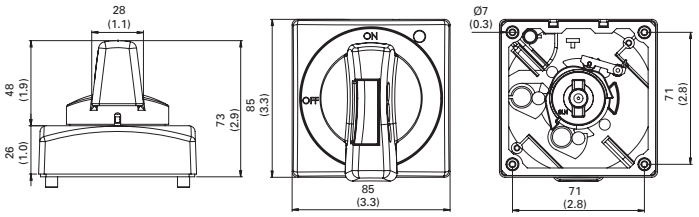


### Short pistol for 8 mm and 12 mm shafts

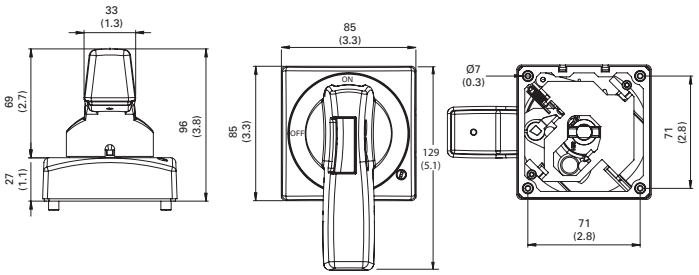


### Long pistol for 12 mm shafts

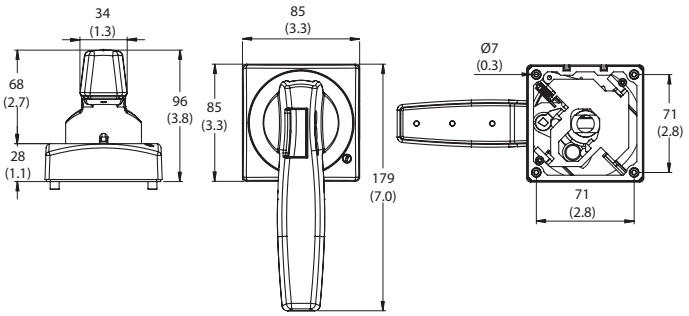


### NFPA 79 compliant handles

### Catalog numbers

- CCP2-NFPA-1
  (8 mm shafts for 30-100 A switches)
- CCP2-NFPA-2
  (12 mm shafts for 200 and 400 A switches)

### Description

NFPA 79 handles mount on the shaft of front rotary operated switch installations and provide a lockout means independent of the door position.

## Handle shafts

### 8 mm shafts

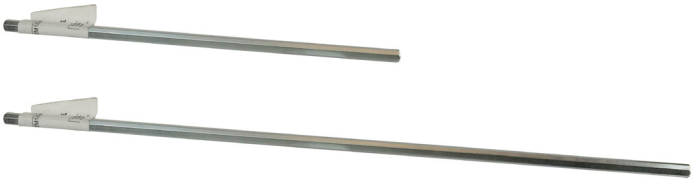

### 12 mm shafts

### Catalog numbers

- CCP2-SH1-290 (8 mm, 290 mm long)
- CCP2-SH1-490 (8 mm, 490 mm long)
- CCP2-SH2-225 (12 mm, 225 mm long)
- CCP2-SH2-425 (12 mm, 425 mm long)

### Description

Square shafts available in:

- 8 mm square by 290 and 490 mm lengths for 30, 60 and 100 A switches
- 12 mm square by 225 and 425 mm lengths for 200 and 400 A switches

All shafts are indexed to ensure handle/switch orientation for correct operation. Shafts are to be cut to length when installed.

## Flange handle rod and cable operators

| Catalog no. | Description | Rating |
|---|---|---|
| **30, 60 and 100 amp switches** | | |
| CCP2-FLR1 | Rod operator with painted handle | Type 1, 3R, 12 |
| CCP2-FLR1X | Rod operator with chrome handle | Type 4X |
| CCP2-FLC1-36 | 36″ Cable with painted handle | Type 1, 3R, 12 |
| CCP2-FLC1-36X | 36″ Cable with chrome handle | Type 4X |
| CCP2-FLC1-60 | 60″ Cable with painted handle | Type 1, 3R, 12 |
| CCP2-FLC1-60X | 60″ Cable with chrome handle | Type 4X |
| CCP2-FLC1-120 | 120″ Cable with painted handle | Type 1, 3R, 12 |
| CCP2-FLC1-120X | 120″ Cable with chrome handle | Type 4X |
| **200 and 400 amp switches** | | |
| CCP2-FLR2 | Rod operator with painted handle | Type 1, 3R, 12 |
| CCP2-FLR2X | Rod operator with chrome handle | Type 4X |
| CCP2-FLC2-36 | 36″ Cable with painted handle | Type 1, 3R, 12 |
| CCP2-FLC2-36X | 36″ Cable with chrome handle | Type 4X |
| CCP2-FLC2-60 | 60″ Cable with painted handle | 1, 3R, 12 |
| CCP2-FLC2-60X | 60″ Cable with chrome handle | Type 4X |
| CCP2-FLC2-120 | 120″ Cable with painted handle | Type 1, 3R, 12 |
| CCP2-FLC2-120X | 120″ Cable with chrome handle | Type 4X |

### Description

Flange rod and cable operators for use on 2- and 3-pole CCP2 switches (cannot be used with 2- or 3-pole 30, 60 or 100 amp switches already having a front or side rotary operating mechanism).

Handles are available in painted versions with NEMA 1, 3R and 12 ratings or chrome versions with a NEMA 4X rating.

Cable operators are available with 36, 60 and 120 inch cable lengths.

### Agency information

- Type 1, 4X and 12
- RoHS compliant

### Storage and operating temperature

- -20°C to 75°C (-4°F to 167°F)

### Packaging

- Each handle is packaged individually as a kit

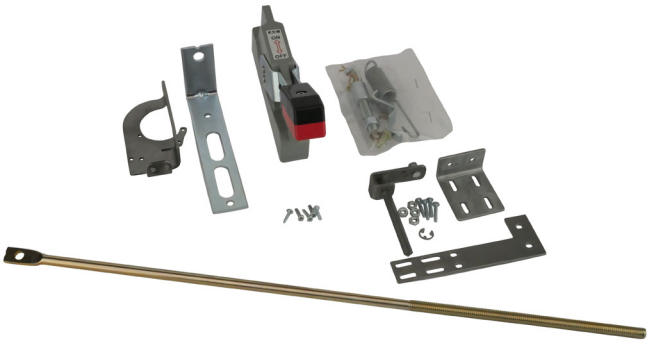

**Flange rod operator kit for 30, 60 and 100 A switches.**

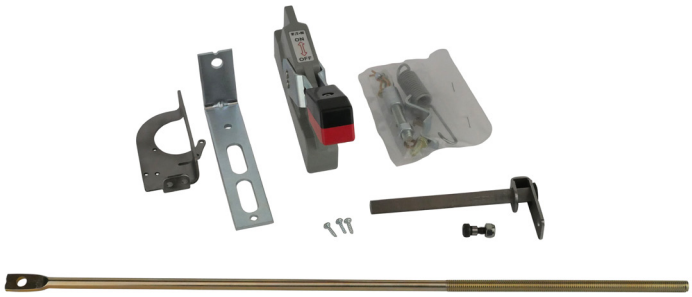

**Flange rod operator kit for 200 and 400 A switches.**

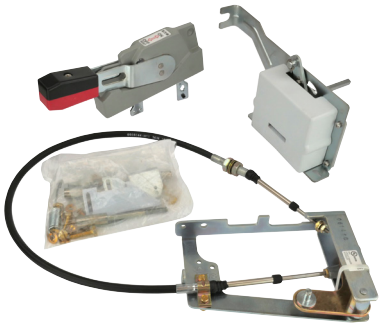

**Flange cable operator kit for 30, 60 and 100 A switches.**

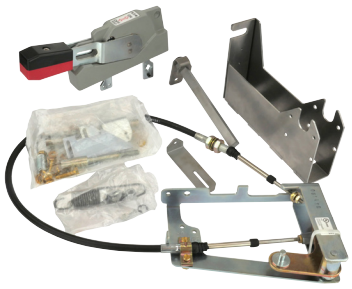

**Flange cable operator kit for 200 and 400 A switches.**

## Front rotary mechanisms for 200 and 400 A switches

Catalog numbers

- CCP2-RM2 (3-pole 200 A switches)
- CCP2-RM4 (3-pole 400 A switches)

Description

Front rotary mechanisms for through-the-door operation and install on the front of 3-pole switches only. These units provide at-switch lockout/tagout capability for enhanced safety. Complete installation requires installing pistol handle (short or long) and 12 mm shaft.

Packaged individually.

## Side rotary mechanism for 200 and 400 A switches

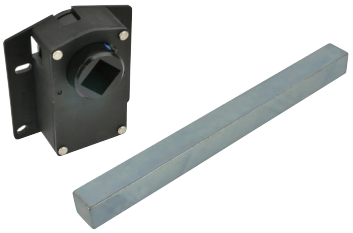

Catalog number

- CCP2-SM
  (1-, 2- or 3-pole 200 and 400 A switches)

Description

Side rotary mechanism for through-the-side operation and installs on the left or right side (right side installation recommended) of any 1-, 2- or 3-pole 200 and 400 A switch. The side rotary mechanism does not provide for door interlock nor local lockout/tagout capability. Complete installation requires installing pistol handle (short or long) and 12 mm shaft.

Packaged individually.

## Terminal shrouds

Catalog numbers

- CCP2-TS2-3
  (3-pole 200 A switches)
- CCP2-TS6-3
  (3-pole 400 A switches)

Description

3-pole shroud kit with shields for isolating the lugs on 3-pole 200 and 400 A switches.

Packaged individually.

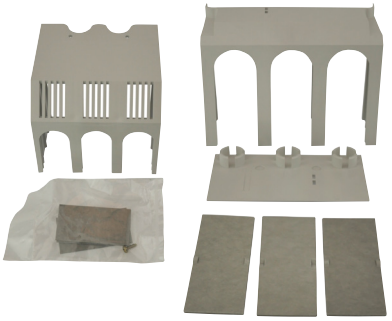

## Phase barriers

Catalog numbers

- CCP2-PB2
  (3-pole 200 A switches)
- CCP2-PB6
  (3-pole 400 A switches)

Description

Phase barrier kit with two phase barriers for isolation between the lugs on 3-pole 200 and 400 A switches.

Packaged individually.

## Handle extension

Catalog number

- CCP2-HEX (1-, 2- and 3-pole 200 and 400 A switches)

Description

A handle extension to provide additional leverage for operating the switch in installations that do not have rotary mechanisms or flange operators installed. Does not mount on switch, provision for tether provided.

Packaged individually.

## Auxiliary contacts for 30, 60 and 100 A switches

### Catalog numbers

- CCP2-AUX (30 and 60 A switches)
- CCP2-AUX-100 (100 A switches)

### Description

NO+NC contact output to indicate the switching mechanism status on the CCP2. A single unit can be mounted on any 1-, 2- or 3-pole CUBEFuse CCP2 switch and the left front/left side rotary operated switches.

### Ratings

- 240 Vac max
- 5 A max
- NC/NO contacts are closed/open when the CCP2 switch is in the "ON" position (closed)

| Catalog no. | Switch | Description | Max per CCP2* | Ratings |
|---|---|---|---|---|
| CCP2-AUX | 30/60 A only | Auxiliary contacts N/NC for switch status | 1 per CCP2 (1-, 2- or 3-pole) | 5 A / 240 Vac |
| CCP2-AUX-100 | 100 A only | | | |

* The CCP2-AUX CANNOT be mounted on the right front and right side rotary operated versions, nor installed with the flange handle rod or cable operator. De-energize all circuits and follow all prescribed safety procedures before installing or removing the auxiliary contact device.

### Agency information

- UL 98 Recognized, Guide WHTY2, File E155130
- cURus to Canadian Standard 22.2 No. 4-04
- Finger-safe in installed state
- RoHS compliant
- CE

### Wiring

- 16-20 AWG (1.5 to 0.5 mm²) single and dual stranded wire
- 20 AWG (1.5 mm²) single and dual solid wire
- Torque 0.56 N•m (5 lb-in)
- Use only 75°C Cu wire

### Packaging

- CCP2-AUX and CCP2-AUX-100 are packaged individually

### Installation technique

- Mounts on the CCP2's right side ONLY and mechanically interlocks with the CCP2 switch handle with provided hardware. The CCP2-AUX and CCP2-AUX-100 CANNOT be mounted on the right front and right side rotary operated versions, nor installed with the flange handle rod or cable operator.

### Storage and operating temperature

- -20°C to 75°C (-4°F to 167°F)

### Installed on a CCP2-3-xx

**Note:** CCP2-AUX and CCP2-AUX-100 **CANNOT** be mounted on the right front and right side rotary operated versions, nor installed with the flange handle rod or cable operator.

### Dimensions — in

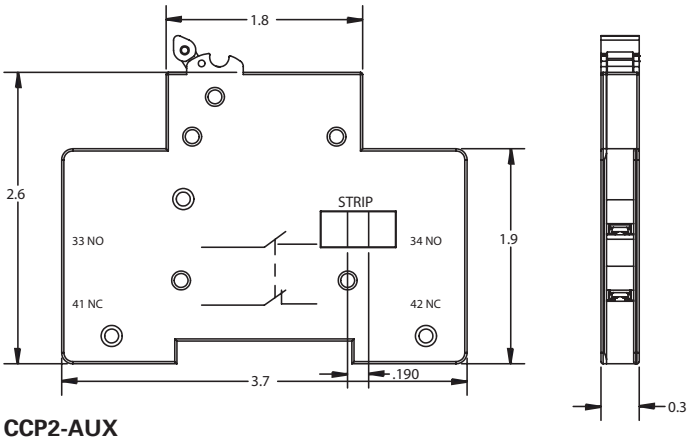


**CCP2-AUX**

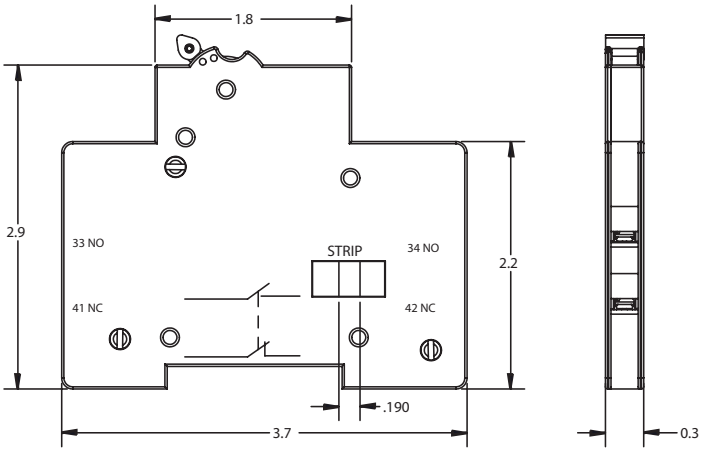


**CCP2-AUX-100**

## Auxiliary contacts for 200 and 400 A switches

### Catalog number

- CCP2-AUX-S (200 and 400 A switches)

### Description

NO+NC contact output to indicate the switching mechanism status on the CCP2. A single unit can be mounted on either side of any 1-, 2- or 3-pole switch (cannot be mounted on the same side as the CCP2-SM side rotary mechanism or the right side if a flange handle rod or cable operator is installed).

### Ratings

- 240 Vac max
- 5 A max
- NC/NO contacts are closed/open when the CCP2 switch is in the "ON" position (closed)

| Catalog no. | Switch | Description | Max per CCP2* | Ratings |
|---|---|---|---|---|
| CCP2-AUX-S | 200 and 400 A | Auxiliary contacts NO+NC for switch status | 1 per CCP2 (1-, 2- or 3-pole) | 5 A / 240 Vac |

* The CCP2-AUX-S CANNOT be mounted on the same side where the side rotary mechanism (CCP2-SM) is installed.
De-energize all circuits and follow all prescribed safety procedures before installing or removing the auxiliary contact device.

### Agency information

- UL 98 Recognized, Guide WHTY2, File E155130
- cURus to Canadian Standard 22.2 No. 4-04
- Finger-safe in installed state
- RoHS compliant

### Wiring

- 16-20 AWG (1.5 to 0.5 $mm^2$) single and dual stranded wire
- 20 AWG (1.5 $mm^2$) single and dual solid wire
- Torque 0.56 N•m (5 lb-in)
- Use only 75°C Cu wire

### Installation technique

- Mounts on either side of the 200 and 400 A switches and mechanically interlocks with the switch's handle with provided hardware. The CCP2-AUX-S CANNOT be mounted on the same side with an installed CCP2-SM side rotary mechanism, or the flange cable/rod operating mechanisms.

### Storage and operating temperature

- -20°C to 75°C (-4°F to 167°F)

### Packaging

- Packaged individually.

### Installed on a CCP2-3-xx

**Note:** CCP2-AUX-S **CANNOT** be mounted on the same side as the side rotary mechanism CCP2-SM or the right side if a flange handle rod or cable operator is installed.

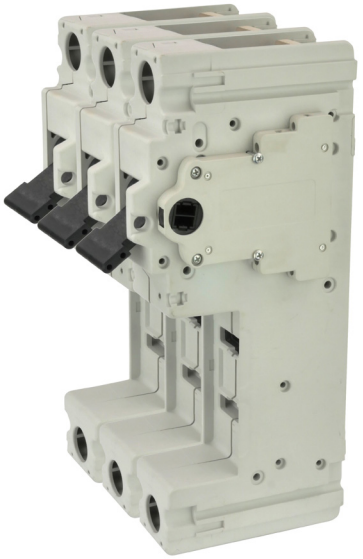

## PLC fuse monitor for 30, 60 and 100 A switches

### Catalog numbers

- CCP2-PLC-IND (30/60 A switches)
- CCP2-PLC-100 (100 A switches)

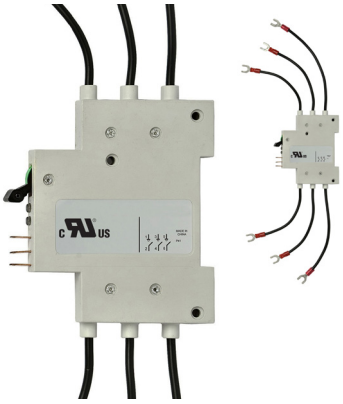

### Description

A resettable three-phase fuse monitor that integrates with the I/O card in a Programmable Logic Controller (PLC). A single unit can be mounted on any 1-, 2- or 3-pole CUBEFuse CCP2 switch up to 100 A and the left front/ left side rotary operated switches.
A single unit monitors up to three phases. When used on 1- and 2-pole switches unused conductor(s) are removed after installation. The CCP2-PLC-IND and CCP2-PLC-100 **CANNOT** be mounted on the left front/left side rotary operated versions or if a multi-wire lug kit is installed or if a multi-wire lug kit is installed, or if the flange handle rod operator is installed.

### Ratings

- Signal output to PLC*
  - +24 Vdc, 10 mA max
- Output signals
  - Digital 0 Vdc (low), 24 Vdc max (high)
  - 0 Vdc Low – fuse is good
  - 24 Vdc High – fuse has opened

* When the fuse opens, the output signal is sent high and will remain high until the unit is reset.

### Emissions and immunity testing

- IEC 60947-1: Voltage Switchgear and Control Gear
- IEC 61000-6-2: Electromagnetic Compatibility (EMC)
  - IEC 61000-4-2: Electrostatic Discharge Immunity - Test at level 3 (6 kV-Contact Discharge) and level 2 (4 kV-Air Discharge)
  - IEC 61000-4-3: Electromagnetic Compatibility - Radiated, Radio-frequency, Electromagnetic Field Immunity test at level x (20 V/m)
  - IEC 61000-4-4: Electromagnetic Compatibility - Testing and Measurement Techniques at level 3 (± 2kV - Power Port and ±1 kV - I/O Ports)
  - IEC 61000-4-5: Electromagnetic Compatibility - Surge Immunity test at level 4 (±4 kV)
  - IEC 61000-4-6: Immunity to Conducted Disturbances at level 3 (10 V)

| Catalog no. | Switch | Description | Max per CCP2** | Signal output to PLC | Min. circuit volts |
|---|---|---|---|---|---|
| CCP2-PLC-IND | 30/60 A only | Wired remote fuse indication for PLC applications | 1 per CCP2 (1, 2- or 3-pole) | 24 Vdc/ 10 mA | 100 Vac |
| CCP2-PLC-100 | 100 A only | | | | |

**The CCP2-PLC-IND and CCP2-PLC-100 CANNOT be mounted on the left front/ left side rotary operated versions or if a multi-wire lug kit is installed.

De-energize all circuits and follow all prescribed safety procedures before installing or removing the CCP2-PLC-IND or CCP2-PLC-100.

### Agency information

- UL 98 Recognized, Guide WHTY2, File E155130
- cURus to Canadian Standard 22.2 No. 4-04

### Local indication

- Two distinct LEDs indicate unit power (green) and open fuse (red). Open fuse LED is resettable upon fuse replacement and the actuating the reset switch

### Wiring

- For power, signal and ground connections use shielded twisted pair 22-24 AWG (0.34-0.25 $mm^2$) 300 V rated wire

### Installation technique

- Mounts on the left side ONLY of the CCP2 and mechanically interlocks with the CCP2 switch handle with hardware provided. The CCP2-PLC-IND and CCP2-PLC-100 **CANNOT** be mounted on the left front/left side rotary operated versions or if a multi-wire lug kit is installed or if the flange handle rod operator is installed.

### IP20 rating — yes

### Storage and operating temperature

- -20°C to 75°C (-4°F to 167°F)

### PLC programming

- The CCP2-PLC-IND or CCP2-PLC-100 signal line is designed to provide a digital input to a PLC I/O card. In this case, a Programmable Logic Control program must be written to properly interpret the input signal to the PLC. The PLC program should check for consecutive high signals before taking action on a critical process.

### Installed on a CCP2-3-xx

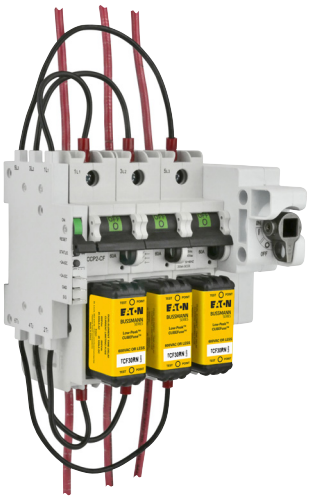

CCP2-PLC-IND mounted on a 3-pole switch and using the fork terminals. When mounted on a 2- or 1-pole switch, remove unused leads.

**Note:** the CCP2-PLC-IND **CANNOT** be mounted on the left front/left side rotary operated versions or if the multi-wire lug kit is installed or if the flange handle rod operator is installed.

### PLC wiring schematic

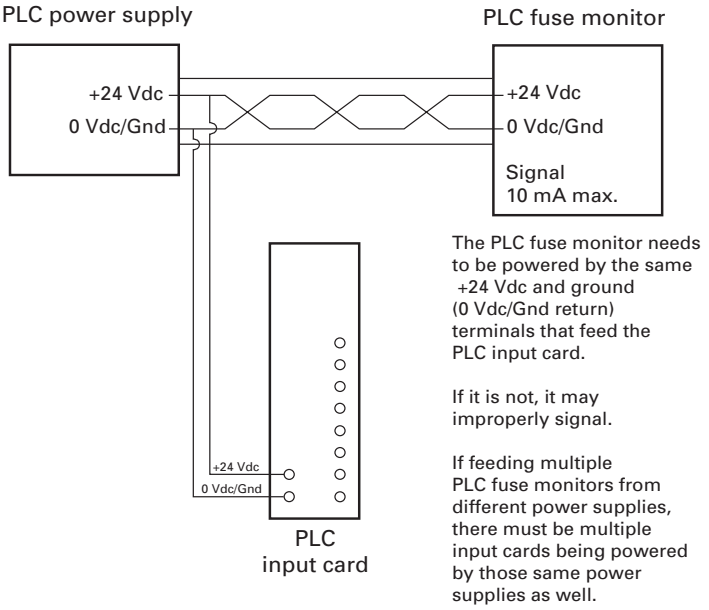


The PLC fuse monitor needs to be powered by the same +24 Vdc and ground (0 Vdc/Gnd return) terminals that feed the PLC input card.

If it is not, it may improperly signal.

If feeding multiple PLC fuse monitors from different power supplies, there must be multiple input cards being powered by those same power supplies as well.

### Dimensions — in

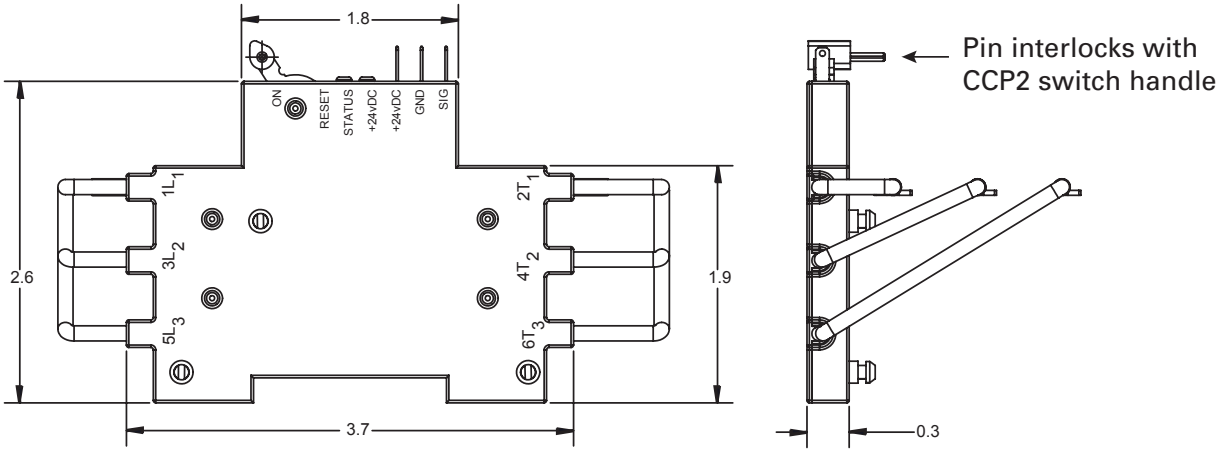


### 30 and 60 A CCP

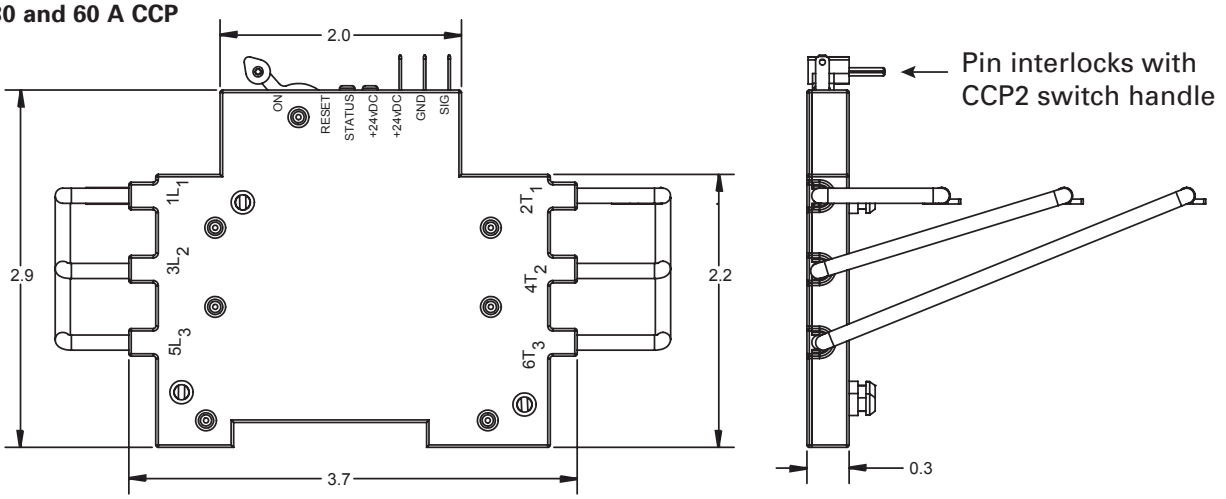


### 100 A CCP

## Ordering a complete switch installation

### 30 and 60 A CCP2 switches

For a complete assembly, select from the following required and optional components, and accessories.

| | | Catalog no. | | |
|---|---|---|---|---|
| Required | | **Switches** | **Amps** | **Poles** |
| | | **Switch (used alone or with flange cable or flange rod handles)** | | |
| | | CCP2-1-30CF | 30 | 1 |
| | | CCP2-2-30CF | | 2 |
| | | CCP2-3-30CF | | 3 |
| | | CCP2-1-60CF | 60 | 1 |
| | | CCP2-2-60CF | | 2 |
| | | CCP2-3-60CF | | 3 |
| | | **And** | | |
| Optional | | **Flange handle rod operator** | **Description — 3-pole switches only** | **Rating** |
| | | CCP2-FLR1-21 | Red/black painted handle | 1, 3R and 12 |
| | | CCP2-FLR1-21X | Chrome handle | 4X |
| | 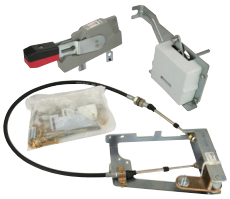 | **Or** | | |
| | | **Flange handle cable operator** | **Description - 3-pole switches only, cannot be used with side or front rotary mechanisms** | **Rating** |
| | | CCP2-FLC1-36 | 36″ cable, red/black painted handle | Type 1, 3R, 12 |
| | | CCP2-FLC1-36X | 36″ cable, chrome handle | Type 4X |
| | | CCP2-FLC1-60 | 60″ cable, red/black painted handle | Type 1, 3R, 12 |
| | | CCP2-FLC1-60X | 60″ cable, chrome handle | Type 4X |
| | | CCP2-FLC1-120 | 120″ cable, red/black painted handle | Type 1, 3R, 12 |
| | | CCP2-FLC1-120X | 120″ cable, chrome handle | Type 4X |
| | | | | |
| | | **Multi-wire lug kits** | **Description** | |
| | | CCP2-MW1-3 | 3-port multi-wire, 75°C Cu/Al, 6-14, includes terminal shrouds, pack of 3 | |
| | | **And** | | |
| Accessories | | **Terminal shrouds** | **Description** | |
| | | CCP2-TS1-3 | Pack of 3 | |
| | | **Auxiliary contacts** | **Description — mounts on right side, cannot be used with flange handle rod or cable operator** | |
| | | CCP2-AUX | NO/NC, 5 A / 240 V | |
| | | **PLC fuse monitor** | **Description — mounts on left side, cannot be used with flange handle rod operator** | |
| | | CCP2-PLC-IND | Signal output 24 Vdc / 10 mA | |

## Ordering a complete switch installation

### 30 and 60 A CCP2 clockwise rotary switches

For a complete assembly, select from the following required and optional components, and accessories.

| | | Catalog no. | | |
|---|---|---|---|---|
| Required | | **Switches** | **Amps** | **Poles** |
| | | **Right front rotary** | | |
| | | CCP2R-2-30CF | 30 | 2 |
| | | CCP2R-3-30CF | | 3 |
| | | CCP2R-2-60CF | 60 | 2 |
| | | CCP2R-3-60CF | | 3 |
| | | **Left front rotary** | | |
| | | CCP2RL-2-30CF | 30 | 2 |
| | | CCP2RL-3-30CF | | 3 |
| | | CCP2RL-2-60CF | 60 | 2 |
| | | CCP2RL-3-60CF | | 3 |
| | | **Right side rotary** | | |
| | | CCP2S-2-30CF | 30 | 2 |
| | | CCP2S-3-30CF | | 3 |
| | | CCP2S-2-60CF | 60 | 2 |
| | | CCP2S-3-60CF | | 3 |
| | | **And** | | |
| | | **Rotary handles** | **Description** | **Rating** |
| | | CCP2-H4X-B1 | Selector handle — black/grey | Type 1, 4X, 12 |
| | | CCP2-H4X-R1 | Selector handle — red/yellow | |
| | | CCP2-H4X-B2 | Pistol handle — black/grey | |
| | | CCP2-H4X-R2 | Pistol handle — red/yellow | |
| | | **And** | | |
| | | **Shafts (8 mm)** | **Length** | |
| | | CCP2-SH1-290 | 290 mm | |
| | | CCP2-SH1-490 | 490 mm | |
| | | **NFPA 79 compliant handle** | **Color** | |
| | | CCP2-NFPA-1 | Red | |
| **And** | | | | |
| Optional | | **Multi-wire lug kits** | **Description** | |
| | | CCP2-MW1-3 | 3-port multi-wire, 75°C Cu/Al, 6-14, includes terminal shrouds, pack of 3 | |

| And | | | |
|---|---|---|---|
| Accessories | | **Terminal shrouds** | **Description** |
| | | CCP2-TS1-3 | Pack of 3 |
| | | **Auxiliary contacts** | **Description — use with CCP2RL-(poles)-30/60CF switches** |
| | | CCP2-AUX | NO/NC, 5 A / 240 V |
| | | **PLC fuse monitor** | **Description — use with CCP2R-(poles)-30/60CF and CCP2S-(poles)-30/60CF switches** |
| | | CCP2-PLC-IND | Signal output 24 Vdc / 10 mA |

## Ordering a complete switch installation

### 30 and 60 A CCP2 counterclockwise switches

For a complete assembly, select from the following required and optional components, and accessories.

| | | | | |
|---|---|---|---|---|
| Required | | **Catalog no.** | | |
| | | **Switches** | **Amps** | **Poles** |
| | | **Left side rotary** | | |
| | | CCP2SL-2-30CF | 30 | 2 |
| | | CCP2SL-3-30CF | | 3 |
| | | CCP2SL-2-60CF | 60 | 2 |
| | | CCP2SL-3-60CF | | 3 |
| | | **And** | | |
| | | **Rotary handles** | **Description** | **Rating** |
| | | CCP2-H4X-B1L | Selector handle — black/grey | Type 1, 4X, 12 |
| | | CCP2-H4X-R1L | Selector handle — red/yellow | |
| | | CCP2-H4X-B2L | Pistol handle — black/grey | |
| | | CCP2-H4X-R2L | Pistol handle — red/yellow | |
| | | **And** | | |
| | | **Shafts (8 mm)** | **Length** | |
| | | CCP2-SH1-290 | 290 mm | |
| | | CCP2-SH1-490 | 490 mm | |
| | | **NFPA 79 compliant handle** | **Color** | |
| | | CCP2-NFPA-1 | Red | |
| **And** | | | | |
| Optional | | **Multi-wire lug kits** | **Description** | |
| | | CCP2-MW1-3 | 3-port multi-wire, 75°C Cu/Al, 6-14, includes terminal shrouds, pack of 3 | |
| **And** | | | | |
| Accessories | | **Terminal shrouds** | **Description** | |
| | | CCP2-TS1-3 | Pack of 3 | |
| | | **Auxiliary contacts** | **Description —mounts on right side** | |
| | | CCP2-AUX | NO/NC, 5 A / 240 V | |

## Ordering a complete switch installation

### 100 A CCP2 switches

For a complete assembly, select from the following required and optional components, and accessories.

| | | Catalog no. | | |
|---|---|---|---|---|
| | | **Switches** | **Amps** | **Poles** |
| | | **Switch (used alone or with flange cable or flange rod handles)** | | |
| Required | | CCP2-1-100CF | 100 | 1 |
| | | CCP2-2-100CF | | 2 |
| | | CCP2-3-100CF | | 3 |
| | | **And** | | |
| Optional | | **Flange handle rod operator** | **Description — 3-pole switches only** | **Rating** |
| | | CCP2-FLR1-21 | Red/black painted handle | 1, 3R and 12 |
| | | CCP2-FLR1-21X | Chrome handle | 4X |
| | 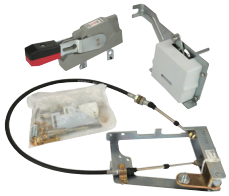 | **Or** | | |
| | | **Flange handle cable operator** | **Description - 3-pole switches only, cannot be used with side or front rotary mechanisms** | **Rating** |
| | | CCP2-FLC1-36 | 36″ cable, red/black painted handle | Type 1, 3R, 12 |
| | | CCP2-FLC1-36X | 36″ cable, chrome handle | Type 4X |
| | | CCP2-FLC1-60 | 60″ cable, red/black painted handle | Type 1, 3R, 12 |
| | | CCP2-FLC1-60X | 60″ cable, chrome handle | Type 4X |
| | | CCP2-FLC1-120 | 120″ cable, red/black painted handle | Type 1, 3R, 12 |
| | | CCP2-FLC1-120X | 120″ cable, chrome handle | Type 4X |
| | | | | |
| | | **Multi-wire lug kits** | **Description** | |
| | | CCP2-MW1-6 | 6-port multi-wire, 75°C Cu/Al, 6-14, includes terminal shrouds, pack of 3 | |
| | | **And** | | |
| Accessories | | **Terminal shrouds** | **Description** | |
| | | CCP2-TS1-6 | Pack of 3 | |
| | | **Auxiliary contacts** | **Description — mounts on right side, cannot be used with flange handle rod or cable operator** | |
| | | CCP2-AUX-100 | NO/NC, 5 A / 240 V | |
| | | **PLC fuse monitor** | **Description — mounts on left side, cannot be used with flange handle rod operator** | |
| | | CCP2-PLC-100 | Signal output 24 Vdc / 10 mA | |

## Ordering a complete switch installation

### 100 A CCP2 clockwise rotary switches

For a complete assembly, select from the following required and optional components, and accessories.

| | | Catalog no. | | |
|---|---|---|---|---|
| | | **Switches** | **Amps** | **Poles** |
| Required | | **Right front rotary** | | |
| | | CCP2R-2-100CF | 100 | 2 |
| | | CCP2R-3-100CF | | 3 |
| | | **Left front rotary** | | |
| | | CCP2RL-2-100CF | 100 | 2 |
| | | CCP2RL-3-100CF | | 3 |
| | | **Right side rotary** | | |
| | | CCP2S-2-100CF | 100 | 2 |
| | | CCP2S-3-100CF | | 3 |
| | | **And** | | |
| | | **Rotary handles** | **Description** | **Rating** |
| | | CCP2-H4X-B1 | Selector handle — black/grey | Type 1, 4X, 12 |
| | | CCP2-H4X-R1 | Selector handle — red/yellow | |
| | | CCP2-H4X-B2 | Pistol handle — black/grey | |
| | | CCP2-H4X-R2 | Pistol handle — red/yellow | |
| | | **And** | | |
| | | **Shafts (8 mm)** | **Length** | |
| | | CCP2-SH1-290 | 290 mm | |
| | | CCP2-SH1-490 | 490 mm | |
| | | **NFPA 79 compliant handle** | **Color** | |
| | | CCP2-NFPA-1 | Red | |
| **And** | | | | |
| Optional | | **Multi-wire lug kits** | **Description** | |
| | | CCP2-MW1-6 | 6-port multi-wire, 75°C Cu/Al, 6-14, includes terminal shrouds, pack of 3 | |

| And | | | |
|---|---|---|---|
| Accessories | | **Terminal shrouds** | **Description** |
| | | CCP2-TS1-6 | Pack of 3 |
| | | **Auxiliary contacts** | **Description — cannot be used on right front or right side operated switches** |
| | | CCP2-AUX-100 | NO/NC, 5 A / 240 V |
| | | **PLC fuse monitor** | **Description — Cannot be used on left front or left side operated switches** |
| | | CCP2-PLC-100 | Signal output 24 Vdc / 10 mA |

## Ordering a complete switch installation

### 100 A CCP2 counterclockwise switches

For a complete assembly, select from the following required and optional components, and accessories.

| | | | | |
|---|---|---|---|---|
| Required | | **Catalog no.** | | |
| | | **Switches** | **Amps** | **Poles** |
| | | **Left side rotary** | | |
| | | CCP2SL-2-100CF | 100 | 2 |
| | | CCP2SL-3-100CF | | 3 |
| | | **And** | | |
| | | **Rotary handles** | **Description** | **Rating** |
| | | CCP2-H4X-B1L | Selector handle — black/grey | Type 1, 4X, 12 |
| | | CCP2-H4X-R1L | Selector handle — red/yellow | |
| | | CCP2-H4X-B2L | Pistol handle — black/grey | |
| | | CCP2-H4X-R2L | Pistol handle — red/yellow | |
| | | **And** | | |
| | | **Shafts (8 mm)** | **Length** | |
| | | CCP2-SH1-290 | 290 mm | |
| | | CCP2-SH1-490 | 490 mm | |
| | | **NFPA 79 compliant handle** | **Color** | |
| | | CCP2-NFPA-1 | Red | |
| **And** | | | | |
| Optional | | **Multi-wire lug kits** | **Description** | |
| | | CCP2-MW1-6 | 6-port multi-wire, 75°C Cu/Al, 6-14, includes terminal shrouds, pack of 3 | |
| **And** | | | | |
| Accessories | | **Terminal shrouds** | **Description** | |
| | | CCP2-TS1-6 | Pack of 3 | |
| | | **Auxiliary contacts** | **Description — mounts on right side** | |
| | | CCP2-AUX-100 | NO/NC, 5 A / 240 V | |

## About the UL Class CF CUBEFuse

The Bussmann series Low-Peak CUBEFuse is a UL Class CF current-limiting, dual-element, time-delay branch circuit fuse with Class J electrical performance. Available in indicating and non-indicating versions, this finger-safe fuse has a very compact, space-saving size and is easily applied using the CUBEFuse holder (TCFH_N), UL 98 Compact Circuit Protector switch (CCP2-_CF) or Compact Circuit Protector Base (CCP2B up to 100 A) used in the Quik-Spec Coordination Panelboard).

### Ratings

- Volts
  - 600 Vac
  - 300 Vdc
- Amps
  - 6-400 A (indicating)
  - 1-400 A (non-indicating)
- Interrupting rating
  - 300 kA RMS Sym. (Up to 100 A UL)
  - 200 kA RMS Sym. (110 to 400 A UL)
  - 200 kA RMS Sym. (Up to 100 A CSA)
  - 100 kA DC (Up to 400 A UL and up to 100 A CSA)

### Agency information

- UL Listed Class CF fuse: Guide JDDZ, File E4273 (up to 400 A)
- CSA® Certified fuse: Class 1422-02, File 053787_C_000 (up to 100 A)
- CE
- RoHS compliant

**Catalog numbers (amps)**

| | | | | |
|---|---|---|---|---|
| **Indicating CUBEFuse** | | | | |
| TCF6 | TCF30 | TCF70 | TCF150 | TCF350 |
| TCF10 | TCF35 | TCF80 | TCF175 | TCF400 |
| TCF15 | TCF40 | TCF90 | TCF200 | |
| TCF17-1/2 | TCF45 | TCF100 | TCF225 | |
| TCF20 | TCF50 | TCF110 | TCF250 | |
| TCF25 | TCF60 | TCF125 | TCF300 | |
| **Non-Indicating CUBEFuse** | | | | |
| TCF1RN | TCF20RN | TCF50RN | TCF110RN | TCF250RN |
| TCF3RN | TCF25RN | TCF60RN | TCF125RN | TCF300RN |
| TCF6RN | TCF30RN | TCF70RN | TCF150RN | TCF350RN |
| TCF10RN | TCF35RN | TCF80RN | TCF175RN | TCF400RN |
| TCF15RN | TCF40RN | TCF90RN | TCF200RN | |
| TCF17-1/2RN | TCF45RN | TCF100RN | TCF225RN | |

### Features

- Smallest installed footprint of any UL Class CC, J, or R fuse solution
- Easy application using CUBEFuse holders (TCFH_N), UL 98 Compact Circuit Protector (CCP2) switches and Compact Circuit Protector Base (CCP2B up to 100 A). See data sheet 9007 for details on the CUBEFuse holder, 10801 for details on the CCP2-_CF switch and 1161 for the CCP2B.
- Holders and switches have an amp rating rejection feature to help prevent overfusing; 30, 60 and 100 A switches and holders will hold any CUBEFuse up to its rating, 200 and 400 A switches and 200, 225 and 400 A holders will hold any CUBEFuse 110 A and above up to its rating
- UL Class CF with Class J time-delay electrical performance
- Available in indicating and non-indicating versions
- The indicating version features local *easy*ID™ open fuse technology for faster troubleshooting and reduced downtime
- Faster response to damaging faults helps reduce destructive thermal and magnetic forces
- True dual-element fuse construction with a minimum 10 seconds time-delay at 500% of rating
- Long time-delay minimizes nuisance openings caused by temporary overloads and transient surges
- Up to 300 kA interrupting rating safely interrupts virtually any fault
- Robust cycling and inrush current withstand
- Low let-through currents under fault conditions
- Provides Type 2 "No Damage" protection for IEC motor starters when properly sized
- Easy selective coordination with any other Bussmann series Low-Peak Class CC, J, L or RK1 fuse with simple 2:1 amp ratio between upstream and downstream fuses

* Finger-safe status depends on final, installed application, and will require using accessory shrouds for 110 to 400 A ratings.

### CUBEFuse (cat. no. TCFH_N) holders

The CUBEFuse is also used in holders that can be dovetail together for the smallest footprint possible of any Class J fuse solution (see data sheet no. 9007 for details).

**Finger-safe DIN-Rail or panel mount holders up to 100 A.**

- 30 A holder accepts any CUBEFuse up to 30 A.
- 60 amp holder accepts any CUBEFuse up to 60 A.
- 100 amp holder accepts any CUBEFuse up to 100 A.

**Panel mount holders from 200 to 400 A.**

- 200 A holder accepts any CUBEFuse from 110 to 200 A
- 225 A* holder accepts any CUBEFuse from 110 to 225 A
- 400 A holder accepts any CUBEFuse from 110 to 400 A

Finger-safe installation achievable for three ganged holders and lug kits with shroud

* 200 A and 225 A holders share the same overall dimensions, but the 200 A holder will reject a 225 A fuse.

## Ordering a complete switch installation

### 200 A CCP2 switches

For a complete installation, select from the following required and optional components, and accessories.

| | | Catalog no. | | | |
|---|---|---|---|---|---|
| | | **Switches** | **Amps** | **Poles** | |
| Required | | CCP2-1-200CF | 200 | 1 | |
| | | CCP2-2-200CF | | 2 | |
| | | CCP2-3-200CF | | 3 | |
| | | **And** | | | |
| | | **Lug kits** | **Description** | | |
| | | CCP2-L2-1 | Stainless steel lug, 75° Cu only, 350 kcmil-4, 1 per pack | | |
| | | CCP2-L2-1A | Aluminum lug, 75°C Cu/Al, 350 kcmil-4, 1 per pack | | |
| | | CCP2-MW2-3 | 3-port multi-wire lug, 75°C Cu/Al, 2-14, 3 per pack, includes terminal shroud | | |
| | | CCP2-MW2-6 | 6-port multi-wire lug, 75°C Cu/Al, 6-14, 3 per pack, includes terminal shroud | | |
| **And** | | | | | |
| Optional | 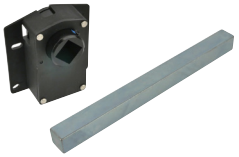 | **Rotary mechanisms** | **Description** | | |
| | | CCP2-SM | Side rotary mechanism - mounts on left or right side of 1-, 2- and 3-pole switches | | |
| | | CCP2-RM2 | Front rotary mechanism - mounts only on 3-pole switches, requires clockwise rotating handle | | |
| | | **And** | | | |
| | | **Rotary handles** | **Description** | **Rotation - must match switch rotation** | **Rating** |
| | | CCP2-H4X-B3 | Short pistol handle — black/grey | Clockwise | Type 1, 4X, 12 |
| | | CCP2-H4X-R3 | Short pistol handle — red/yellow | For use with front rotary mechanism or side rotary mechanism CCP2-SM on the switch's right side | |
| | | CCP2-H4X-B4 | Long pistol handle — black/grey | | |
| | | CCP2-H4X-R4 | Long pistol handle — red/yellow | | |
| | | CCP2-H4X-B3L | Short pistol handle — black/grey | Counterclockwise | |
| | | CCP2-H4X-R3L | Short pistol handle — red/yellow | Use **only** if installing side rotary mechanism CCP2-SM on the switch's left side | |
| | | CCP2-H4X-B4L | Long pistol handle — black/grey | | |
| | | CCP2-H4X-R4L | Long pistol handle — red/yellow | | |
| | | **And** | | | |
| | | **Shafts (12 mm)** | **Length** | | |
| | | CCP2-SH2-225 | 225 mm | | |
| | | CCP2-SH2-425 | 425 mm | | |
| | | **NFPA 79 compliant handle** | **Color** | | |
| | | CCP2-NFPA-2 | Red | | |

**Optional**

| Or | | |
|---|---|---|
| **Flange handle rod operator** | **Description — 3-pole switches only, cannot be used with side or front rotary mechanisms** | **Rating** |
| CCP2-FLR2-21 | Red/black, painted handle | Type 1, 3R and 12 |
| CCP2-FLR2-21X | Chrome handle | Type 4X |

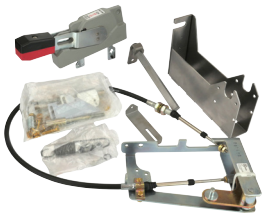

| Or | | |
|---|---|---|
| **Flange handle cable operator** | **Description - 3-pole switches only, cannot be used with side or front rotary mechanisms** | **Rating** |
| CCP2-FLC2-36 | 36″ cable, red/black painted handle | Type 1, 3R and 12 |
| CCP2-FLC2-36X | 36″ cable, chrome handle | Type 4X |
| CCP2-FLC2-60 | 60″ cable, red/black painted handle | Type 1, 3R and 12 |
| CCP2-FLC2-60X | 60″ cable, chrome handle | Type 4X |
| CCP2-FLC2-120 | 120″ cable, red/black painted handle | Type 1, 3R and 12 |
| CCP2-FLC2-120X | 120″ cable, chrome handle | Type 4X |

**And**

**Accessories**

| Terminal shrouds | Description |
|---|---|
| CCP2-TS2-3 | 3-pole terminal shroud with phase shields, 1 per pack |
| **Phase barriers** | **Description** |
| CCP2-PB2 | Phase barriers, 2 per pack |

**And**

| Control wire terminals | Description |
|---|---|
| CCP2-CWK2 | 1/4″ quick-connect control wire terminals - mounts on installed lug (cannot be used with lug CCP2-L2-1), 12 per pack |

| Auxiliary contacts | Description |
|---|---|
| CCP2-AUX-S | NO/NC, 5 A, 240 V - Can be mounted on right or left side |

| Handle extension | Description |
|---|---|
| CCP2-HEX | Handle extension to facilitate operating 1-, 2 and 3-pole switches. Cannot be used when side or front rotary mechanisms or flange handle rod or cable operators are installed. |

## Ordering a complete switch installation

### 400 A CCP2 switches

For a complete installation, select from the following required and optional components, and accessories.

| | | Catalog no. | | |
|---|---|---|---|---|
| | | **Switches** | **Amps** | **Poles** |
| Required | | CCP2-1-400CF | 400 | 1 |
| | | CCP2-2-400CF | | 2 |
| | | CCP2-3-400CF | | 3 |
| | | **And** | | |
| | | **Lug kits** | **Description** | |
| | | CCP2-L4-1 | Stainless steel lug, 75° Cu only, 500 kcmil-3, 1 per pack | |
| | | CCP2-L4-1A | Aluminum lug, 75° Cu only, 500 kcmil-3, 1 per pack | |
| | | CCP2-L4B-3 | Stainless steel lug, 75° Cu only, 750-500 kcmil, 3 per pack, includes terminal shroud | |
| | | CCP2-L4B-3A | Aluminum lug, 75°C Cu/Al, 750-500 kcmil, 3 per pack, includes terminal shroud | |
| | | CCP2-MW6-6 | 6-port multi-wire lug, 75°C Cu/Al, 1/0-14, 3 per pack, includes terminal shroud | |
| | | CCP2-L6-3 | 2-port stainless steel lug, 75° Cu only, 500 kcmil-2, 3 per pack, includes terminal shroud | |
| | | CCP2-L6-3A | 2-port aluminum lug kit, 75° Cu/Al only, 500 kcmil-2, 3 per pack, includes terminal shroud | |
| **And** | | | | |
| Optional | 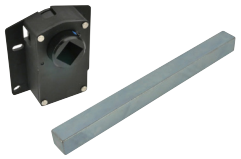 | **Rotary mechanisms** | **Description** | |
| | | CCP2-SM | Side rotary mechanism - mounts on left or right side of 1-, 2- and 3-pole switches | |
| | | CCP2-RM4 | Front rotary mechanism - mounts only on 3-pole switches, requires clockwise rotating handle | |
| | | **And** | | |
| | | **Rotary handles** | **Description** | **Rotation - must match switch rotation** / **Rating** |
| | | CCP2-H4X-B3 | Short pistol handle — black/grey | Clockwise / For use with front rotary mechanism or side rotary mechanism CCP2-SM on the switch's right side / Type 1, 4X, 12 |
| | | CCP2-H4X-R3 | Short pistol handle — red/yellow | |
| | | CCP2-H4X-B4 | Long pistol handle — black/grey | |
| | | CCP2-H4X-R4 | Long pistol handle — red/yellow | |
| | | CCP2-H4X-B3L | Short pistol handle — black/grey | Counterclockwise / Use **only** if installing side rotary mechanism CCP2-SM on the switch's left side |
| | | CCP2-H4X-R3L | Short pistol handle — red/yellow | |
| | | CCP2-H4X-B4L | Long pistol handle — black/grey | |
| | | CCP2-H4X-R4L | Long pistol handle — red/yellow | |
| | | **And** | | |
| | | **Shafts (12 mm)** | **Length** | |
| | | CCP2-SH2-225 | 225 mm | |
| | | CCP2-SH2-425 | 425 mm | |
| | | **NFPA 79 compliant handle** | **Color** | |
| | | CCP2-NFPA-2 | Red | |

| | | | |
|---|---|---|---|
| Optional | | **Or** | |
| | | **Flange handle rod operator** | **Description - 3-pole switches only, cannot be used with side or front rotary mechanisms** | **Rating** |
| | | CCP2-FLR2-21 | Red/black, painted handle | Type 1, 3R, 12 |
| | | CCP2-FLR2-21X | Chrome handle | Type 4X |
| | 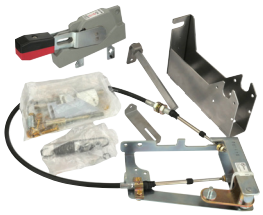 | **Or** | |
| | | **Flange handle cable operator** | **Description - 3-pole switches only, cannot be used with side or front rotary mechanisms** | **Rating** |
| | | CCP2-FLC2-36 | 36″ cable, red/black painted handle | Type 1, 3R, 12 |
| | | CCP2-FLC2-36x | 36″ cable, chrome handle | Type 4X |
| | | CCP2-FLC2-60 | 60″ cable, red/black painted handle | Type 1, 3R, 12 |
| | | CCP2-FLC2-60x | 60″ cable, chrome handle | Type 4X |
| | | CCP2-FLC2-120 | 120″ cable, red/black painted handle | Type 1, 3R, 12 |
| | | CCP2-FLC2-120x | 120″ cable, chrome handle | Type 4X |
| **And** | | | | |
| Accessories | 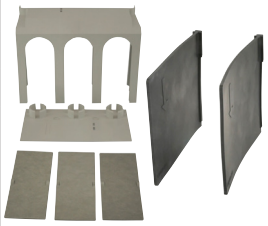 | **Terminal shrouds** | **Description** | |
| | | CCP2-TS6-3 | 3-pole terminal shroud with phase shields, 1 per pack | |
| | | **Phase barriers** | **Description** | |
| | | CCP2-PB6 | Phase barriers, 2 per pack | |
| | | **And** | | |
| | | **Auxiliary contacts** | **Description** | |
| | | CCP2-AUX-S | NO/NC, 5 A, 240 V - Can be mounted on right or left side | |
| | | **Handle extension** | **Description** | |
| | | CCP2-HEX | Handle extension to facilitate operating 1-, 2 and 3-pole switches. Cannot be used when side or front rotary mechanisms, or flange handle rod and cable mechanisms are installed. | |

## CUBEFuse Compact Circuit Protector Base

RoHS 2011/65/EU

| 1-Pole | 2-Pole | 3-pole |
|---|---|---|
| CCP2B-1-_CF | CCP2B-2-_CF | CCP2B-3-_CF |

### Description

The revolutionary Bussmann series Compact Circuit Protector Base (CCP2B) with CUBEFus™ is a UL 98 horsepower rated fused branch circuit disconnect. Primarily used in the Bussmann series Quik-Spec™ Coordination Panelboard, the CCP2B with CUBEFuse simplifies selective coordination for code complaince along with a lockout/tagout feature for isolating individual branch circuit loads to promote safe work practices.

### Features

- Uses finger-safe, current-limiting Class CF CUBEFuse with Class J performance available, time-delay or fast-acting versions from 1 to 100 amps
- Patented amp rating rejection feature helps prevent overfusing
- High 200 kA short-circuit current rating
- Disconnect rated to provide a means for load isolation
- 2- and 3-pole versions full voltage rated at 600 Vac
- Up to 125 Vdc ratings
- UL 98 Listed for branch circuit disconnect
- 1-, 2- and 3-pole versions are horsepower rated
- Listed to UL and cULus
- Open fuse indication lamp per pole speeds troubleshooting
- Additional open fuse indication can be provided by using the time-delay indicating CUBEFuse in ratings from 6 to 100 A
- Built-in switch/fuse interlock prevents removing or installing a fuse while energized
- Permanent lockout/tagout and lock-on provision usign a 1/4" lock

## Specifications:

### Switch amp ratings and rejection breaks

- 15, 20, 30, 40, 50, 60, 70, 90 and 100 A

### Poles

- 1-, 2- and 3-poles

### Volts

- 600 Vac (or less)
- 125 Vdc*

* Switch amp rating and installed fuse amp rating dependent, see catalog number table for details.

### Agency information

- UL 98 Listed, Guide WHTY, File E302370
- cULus to Canadian Standard 22.2 No. 4, Guide WHTY7, File E302370
- RoHS compliant
- CE

### Lineside bolt-on bus connector and torque

- Bolt-mounted design into Quik-Spec Coordination Panelboard bus
- #10-32 UNC hex flange Phillips screw; 2.8 N•m (25 lb-In)

### Loadside box lug terminal conductor data

- See conductor table for details

### Loadside fork terminal

- Max. 30 A suitable for use with #8-32 UNC screw

### Lockout/tagout

- 1/4" lock

### Local open fuse indication

- Light illumination requires closed circuit and minimum 90 volts

### Carton quantity and shipping weight

| Item | Poles | lbs (kg) |
|---|---|---|
| up to 60 amp switches | 6 | 1.7 (0.77) |
| 70 to 100 amp switches | 6 | 2.6 (1.18) |

### Environmental data

- Storage and operating temperature -20°C to 75°C**

**For fuse performance under or above 25°C, consult fuse performance derating charts.

### Available Bussmann series fuses

| UL fuse class | Type/description | Volts | Data sheet no. |
|---|---|---|---|
| CF | Indicating time-delay, Low-Peak CUBEFuse (6-100 A) | 600 Vac/ 300 Vdc | 9000 |
| | Non-indicating time-delay, Low-Peak CUBEFuse (1-100 A) | | |
| | Non-indicating fast-acting CUBEFuse (1-100 A) | 600 Vac/dc | 2147 |

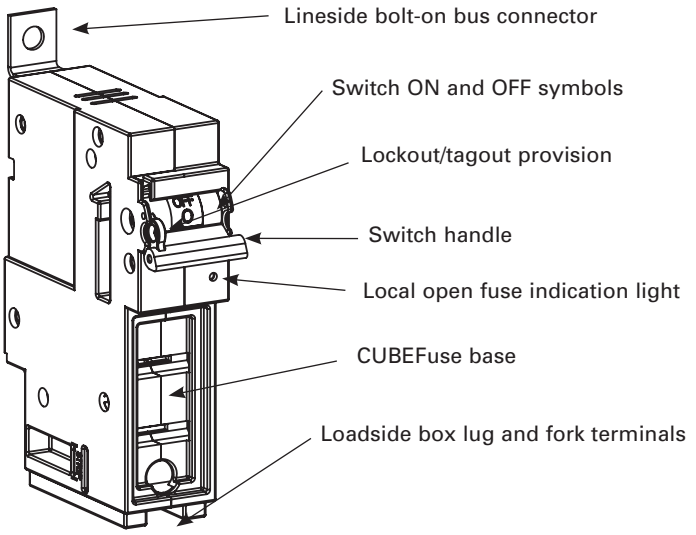


**Data sheet no: 1161**

## Catalog numbers and ratings

| Catalog numbers | Poles | Voltage ratings | Accepts CUBEFuse amp range | SCCR | Hp ratings (Vac)††† |
|---|---|---|---|---|---|
| CCP2B-1-15CF | 1 | 347 Vac, 125 Vdc | 1 to 15 | 200 kA AC<br>100 kA DC | 0.5 Hp @ 120 V |
| CCP2B-2-15CF | 2 | 600 Vac, 125 Vdc | | | 1.5 Hp @ 240 V |
| CCP2B-3-15CF | 3 | 600 Vac | | | 3 Hp @ 240 V<br>5 Hp @ 480 V<br>7.5 Hp @ 600 V |
| CCP2B-1-20CF | 1 | 347 Vac, 125 Vdc | 1 to 20 | | 0.75 Hp @ 120 V |
| CCP2B-2-20CF | 2 | 600 Vac, 125 Vdc | | | 2 Hp @ 240 V |
| CCP2B-3-20CF | 3 | 600 Vac | | | 3 Hp @ 240 V<br>7.5 Hp @ 480 V<br>10 Hp @ 600 V |
| CCP2B-1-30CF | 1 | 347 Vac, 125 Vdc | 1 to 30 | | 1.5 Hp @ 120 V |
| CCP2B-2-30CF | 2 | 600 Vac, 125 Vdc | | | 3 Hp @ 240 V |
| CCP2B-3-30CF | 3 | 600 Vac | | | 5 Hp @ 240 V<br>15 Hp @ 480 V<br>10 Hp @ 600 V |
| CCP2B-1-40CF | 1 | 347 Vac, 125 Vdc | 1 to 40 | | 2.0 Hp @ 120 V |
| CCP2B-2-40CF | 2 | 600 Vac, 125 Vdc | | | 3 Hp @ 240 V |
| CCP2B-3-40CF | 3 | 600 Vac | | | 7.5 Hp @ 240 V<br>20 Hp @ 480 V<br>10 Hp @ 600 V |
| CCP2B-1-50CF | 1 | 347 Vac, 125 Vdc* | 1 to 50 | | 3.0 Hp @ 120 V |
| CCP2B-2-50CF | 2 | 600 Vac, 125 Vdc* | | | 5 Hp @ 240 V |
| CCP2B-3-50CF | 3 | 600 Vac | | | 7.5 Hp @ 240 V<br>20 Hp @ 480 V<br>10 Hp @ 600 V |
| CCP2B-1-60CF | 1 | 347 Vac, 125 Vdc* | 1 to 60 | | 3.0 Hp @ 120 V |
| CCP2B-2-60CF | 2 | 600 Vac, 125 Vdc* | | | 7.5 Hp @ 240 V |
| CCP2B-3-60CF | 3 | 600 Vac | | | 7.5 Hp @ 240 V<br>20 Hp @ 480 V<br>10 Hp @ 600 V |
| CCP2B-1-70CF | 1 | 347 Vac, 125 Vdc | 1 to 70 | | 3.0 Hp @ 120 V |
| CCP2B-2-70CF | 2 | 600 Vac, 125 Vdc | | | 7.5 Hp @ 240 V |
| CCP2B-3-70CF | 3 | 600 Vac | | | 15 Hp @ 240 V<br>30 Hp @ 480 V<br>40 Hp @ 600 V |
| CCP2B-1-90CF | 1 | 347 Vac, 125 Vdc** | 1 to 90 | | 5.0 Hp @ 120 V |
| CCP2B-2-90CF | 2 | 600 Vac, 125 Vdc** | | | 10 Hp @ 240 V |
| CCP2B-3-90CF | 3 | 600 Vac | | | 20 Hp @ 240 V<br>50 Hp @ 480 V<br>40 Hp @ 600 V |
| CCP2B-1-100CF | 1 | 347 Vac, 125 Vdc** | 1 to 100 | | 5.0 Hp @ 120 V |
| CCP2B-2-100CF | 2 | 600 Vac, 125 Vdc** | | | 10 Hp @ 240 V |
| CCP2B-3-100CF | 3 | 600 Vac | | | 20 Hp @ 240 V<br>50 Hp @ 480 V<br>40 Hp @ 600 V |

† 1 and 3 A indicating CUBEFuse not available. Correct fit with CCP2B disconnect requires indicating CUBEFuse with date code R38 or later.
†† Not for use with motors.
††† Indicating or non-indicating time-delay CUBEFuse only.
* 125 Vdc for installed fuse amp ratings up to 40 A. 24 Vdc for installed fuse amp ratings from 45 to 60 A.
** 125 Vdc for installed fuse amp ratings up to 80 A, 24 Vdc for installed fuse amp ratings from 90 to 100 A.

**Data sheet no: 1161**

## Box lug conductor data

| Wire type | AWG range | Class | Quantity | Torque N•m (lb-in) |
|---|---|---|---|---|
| **15 to 60 A switches** | | | | |
| 75°C Cu | 4-6 | Stranded, Class B to K | Single | 3.95 (35) |
| | 8-18 | | | 2.26 (20) |
| | 6-8 | Stranded, Class B/C | Dual | 3.39 (30) |
| | | Stranded, Class K | | 2.26 (20) |
| | 10-18 | Stranded, Class B to K | | |
| | 10-18 | Solid | Single/dual | 2.26 (20) |
| | 4-18 | Stranded, UL ferrule, Class B/C | Single | 3.39 (30) |
| | 6-18 | | Twin† | |
| | 4-18 | Stranded, UL ferrule, Class K | Single | 2.82 (25) |
| | 6-18 | | Twin† | |
| **70 to 100 A switches** | | | | |
| 75°C Cu | 12-18 | Stranded, Class B to K | Single | 2.26 (20) |
| | 10 | | | 2.82 (25) |
| | 8 | | | 4.52 (40 |
| | 4-6 | | | 5.08 (45) |
| | 1-3 | | | 6.21 (55) |
| | 3-12 | Stranded, Class B to K | Dual | 3.95 (35) |
| | 12-18 | Stranded, UL ferrule, Class B/C | Single | 2.26 (20) |
| | 10 | | | 3.95 (35) |
| | 1-8 | | | 4.52 (40) |
| | 10-18 | | Twin† | 2.26 (20) |
| | 6-8 | | | 2.82 (25) |
| | 10-18 | Solid | Single | 2.26 (20) |
| | 10-18 | | Dual | 2.26 (20) |
| | 8-18 | Class K | Single | 2.26 (20) |
| | 1-6 | | | 3.39 (30) |
| | 3-10 | | Dual | 5.08 (45) |
| | 8-18 | Class K, UL ferrule | Single | 2.26 (20) |
| | 1-6 | | | 3.39 (30) |
| | 6-18 | | Twin | 2.26 (20) |

† Two stranded conductors placed in one UL Listed twin ferrule.

## Dimensions — in (mm)

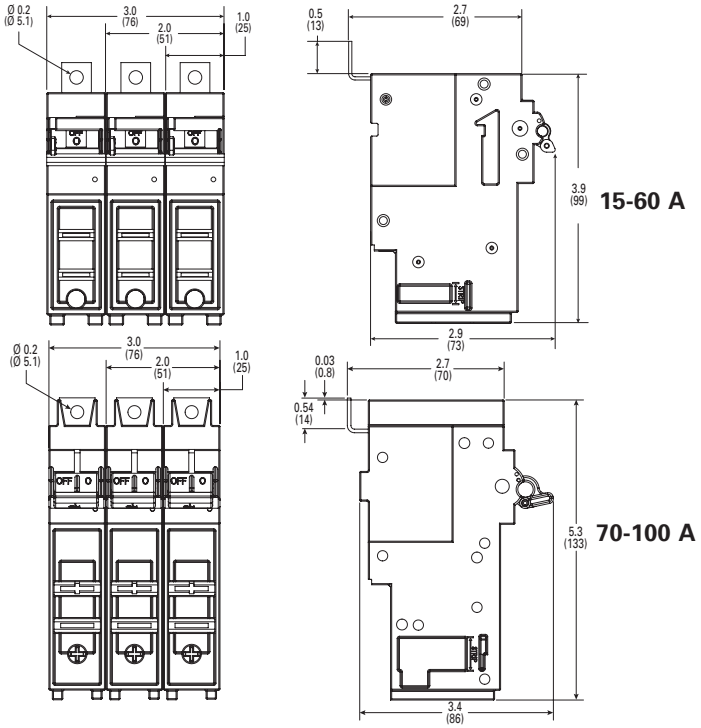


For details on the CCP2B and its use in the Quik-Spec Coordination Panelboard, see data sheet no. 1160.

Disconnect switches

## Compact Circuit Protector (cat. no. CCP2)

**For use with Class CC, Supplemental and IEC 10x38 mm fuses**

CCP2 switch

**Class CC and midget CCP contents** **Section page**

Description and specifications . . . . . .39-40
Catalog numbers . . . . . 41
Conductor information and available fuses . . . . . 42
Dimensions . . . . . 42
**Accessories**
Multi-wire lug kit . . . . . 43
Selector and pistol handles . . . . . 44
NFPA 79 compliant handle . . . . . 44
Shafts. . . . . 44
Auxiliary contacts . . . . . 45
PLC fuse monitor . . . . . .46-47
**How to order tables**
Clockwise rotary operated switches . . . . . .48-49
Switches only . . . . . 50
Counterclockwise rotary operates switches . . . . . 51

CCP2 right front rotary switch

CCP2 left front rotary switch

CCP2 right side rotary switch

CCP2 left side rotary switch

## Catalog symbols

| Symbol | Fuse type | Description |
|---|---|---|
| CCP2-(poles)-30CC | Class CC | Switch only |
| CCP2-(poles)-30M | UL sup./IEC 10x38 | |
| CCP2-1-DCC | Class CC Vdc | 1-pole switch only |
| CCP2-1-DCM | UL sup./IEC 10x38 Vdc | |
| CCP2R-(pole)-30CC | Class CC | Right front rotary switch |
| CCP2R-(pole)-30M | UL sup./IEC 10x38 | |
| CCP2RL-(pole)-30CC | Class CC | Left front rotary switch |
| CCP2RL-(pole)-30M | UL sup./IEC 10x38 | |
| CCP2S-(pole)-30CC | Class CC | Right side rotary switch |
| CCP2S-(pole)-30M | UL sup./IEC 10x38 | |
| CCP2SL-(pole)-30CC | Class CC | Left side rotary switch |
| CCP2SL-(pole)-30M | UL sup./IEC 10x38 | |

## Description

The revolutionary next generation Bussmann™ series Compact Circuit Protector (cat. no. CCP2) fused disconnect switch is 3/5 the footprint of a traditional fusible switch and provides up to a high 200 kA Short-Circuit Current Rating (SCCR) to help improve panel and assembly SCCR.

The 35 mm DIN-Rail mount CCP is available in a variety of configurations to meet many application needs including rotary operation.

Application flexibility is extended with an optional multi-wire lug kit, with finger-safe shrouds, that provides three additional wire ports on each pole for power distribution applications.

Other accessories include a PLC interface device for open fuse monitoring and NO/NC auxiliary contacts that easily integrate into many monitoring systems.

Front and side rotary operated versions are easily applied for through-the-door or through the left or right side operation to enhance safety.

## Ratings

- Volts
  - 600 Vac (UL® Class CC)
  - 240 Vac (UL Supplemental)
  - 400 Vac (IEC 10x38 mm)
  - 80 Vdc (DC Class CC, DC UL Supplemental/IEC)
- Amps
  - 30 A (UL)
  - 32 A (IEC)
- SCCR
  - 200 kA (UL Class CC)
  - 10 kA (UL Supplemental)
  - 120 kA (IEC 10x38 mm max)
  - 20 kA (DC Class CC/UL)
  - 10 kA (DC UL Supplemental/IEC)

## Poles

- 1-, 2- and 3-poles catalog number dependent

## Agency information

- UL Class CC fuse versions
  - UL 98 Listed, Guide WHTY, File E302370
  - cULus to Canadian Standard 22.2 No. 4-04, UL Guide WHTY7, File 302370
- UL Supplemental and IEC 10x38 mm fuse versions
  - UL 508 Listed, Guide NRNT, File E320230
  - cULus Certified 22.2 No. 14-05
  - IEC 60947-3 AC-23A
- DC voltage UL Class CC version (CCP2-1-DCC)
  - UL 508 Listed, cULus 22.2, No. 1405
- DC IEC 10x38 version (CCP2-1-DCM)
  - IEC 60947-3, DC-23A
- RoHS compliant
- CE

## Conductors/terminals

- 75°C Cu/Al, see conductor tables for size, type and torque information
- Box lug, single/dual conductor
- Fork terminal suitable for line, load or accessory connection
- Multi-wire lug kit — see accessories for details

## Storage and operating temperature

- - 20°C to 75°C (-4°F to 167°F)*

* For fuse performance under or above 25°C, consult fuse performance derating charts in the Bussmann Division publication no. 3002, titled Selecting Protective Devices (SPD)

## Lockout/tagout provisions

- Switch only — 4 mm lock or Brady pin-out device part number 90850
- Switch with rotary operating mechanism — 1/4″ lock

## Minimum enclosure size

- 10″ x 8″ x 6″ (254 x 203 x 152 mm)

## Mounting

- 35 mm DIN-Rail

## Local open fuse indication minimum voltage**

- 90 Vac for AC switches
- 12 Vdc for DC switches

** Open fuse indication requires an open fuse to be in the CCP2 and the switch in the ON position.

## Accessories

- Multi-wire lug kit with terminal shrouds
- Selector and pistol handles for use with rotary operated switches
- 8 mm shafts for use with selector and pistol handles
- Auxiliary contacts
- PLC fuse monitor

## Features

- Extremely compact (18 mm wide per pole ) design
- High SCCR up to 200 kA (UL Class CC) and 120 kA (IEC)
- Disconnect rated for load isolation
- Full voltage rated up to 600 Vac or 80 Vdc
- UL 98 Listed Class CC version is horsepower rated and suitable for branch circuit protection and disconnect
- IEC 10x38 version complies with IEC 60947-3 and suitable for branch circuit protection and disconnect
- Suitable for global installations, the switches comply with UL, cULus and IEC standards accepting UL Class CC, Supplemental or IEC aM and gG/gL fuses
- Open fuse indication
  - Standard local open fuse indicating light for each pole
  - Optional PLC fuse monitor can be utilized to signal a PLC and open a contactor to de-energize all phases, if required
- IP20 finger-safe with 10 AWG (6 $mm^2$) or larger wire (box lug terminals only)
- Built-in switch interlock prohibits removing the fuse under load
- Padlockable handle for lockout/tagout
  - 4 mm lock for switch only
  - 1/4″ lock for rotary operated switches
- Rotary operated versions provide for through-the-door and through-the-side operation flexibility and enhanced safety with:
  - Right front switch operation
  - Left front switch operation
  - Right side switch operation
  - Left side switch operation
- Optional selector and pistol handles available for use with rotary operated versions
- Multi-wire lug kit with terminal shrouds allows for power distribution to multiple loads. Each lug has three ports rated for single and dual wires (see lug kit in accessories for conductor and torque details).

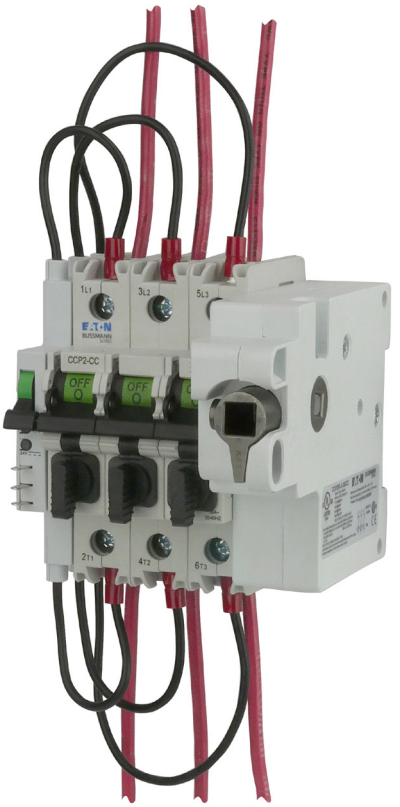

Right front rotary operated CCP2 switch with PLC fuse monitor.

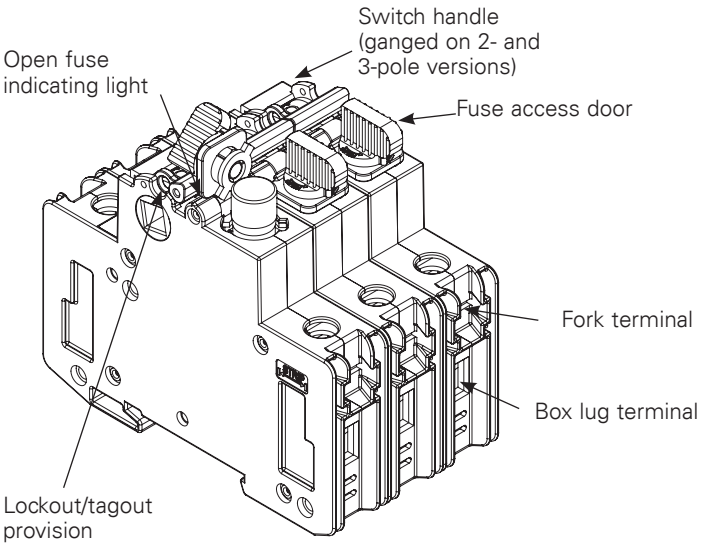


### Rotary operating switch versions

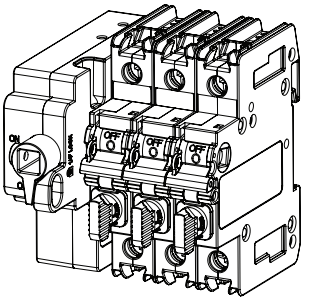

**Left front rotary switch**
Clockwise operating handles

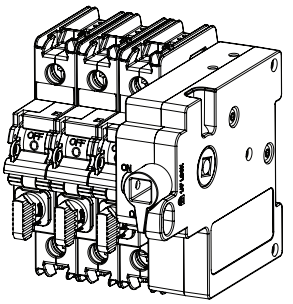

**Right front rotary switch**
Clockwise operating handles

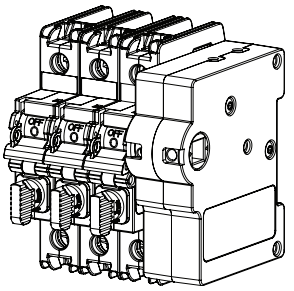

**Right side rotary switch**
Clockwise operating handles

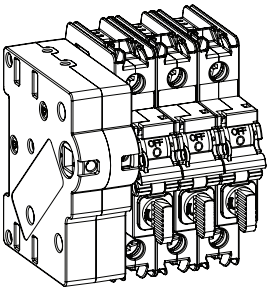

**Left side rotary switch**
Counterclockwise operating handles

## Catalog numbers

| Catalog no. | Poles | Description | Amps | Volts | SCCR | Max horsepower rating (Vac) 120 | 240 | 480 | 600 | Wire type/ size* |
|---|---|---|---|---|---|---|---|---|---|---|
| **Class CC** | | | | | | | | | | |
| CCP2-1-30CC | 1 | Switch only | 30 A | 347 Vac | 200 kA | 1/2 | — | — | — | 75°C Cu/Al 18-4 AWG Fork terminal†† |
| CCP2-2-30CC | 2 | | | 600 Vac | | — | 2 | — | — | |
| CCP2-3-30CC | 3 | | | | | 3/4 | 3 | 5 | 7.5 | |
| CCP2R-2-30CC | 2 | Switch with right front rotary operation | | 600 Vac | | — | 2 | | | |
| CCP2R-3-30CC | 3 | | | | | 3/4 | 3 | 5 | 7.5 | |
| CCP2RL-2-30CC | 2 | Switch with left front rotary operation | | 600 Vac | | — | 2 | — | — | |
| CCP2RL-3-30CC | 3 | | | | | 3/4 | 3 | 5 | 7.5 | |
| CCP2S-2-30CC | 2 | Switch with right side rotary operation | | 600 Vac | | — | 2 | — | — | |
| CCP2S-3-30CC | 3 | | | | | 3/4 | 3 | 5 | 7.5 | |
| CCP2SL-2-30CC | 2 | Switch with left side rotary operation | | 600 Vac | | — | 2 | — | — | |
| CCP2SL-3-30CC | 3 | | | | | 3/4 | 3 | 5 | 7.5 | |
| **UL Supplemental and IEC 10x38 mm** | | | | | | | | | | |
| CCP2-1-30M | 1 | Switch only | UL 30 A IEC 32 A** | UL 240 Vac† IEC 400 Vac† | UL 10 kA† IEC 120 kA† | — | — | — | — | 75°C Cu/Al 18-4 AWG Fork terminal†† |
| CCP2-2-30M | 2 | | | | | | | | | |
| CCP2-3-30M | 3 | | | | | | | | | |
| CCP2R-2-30M | 2 | Switch with right front rotary operation | | | | | | | | |
| CCP2R-3-30M | 3 | | | | | | | | | |
| CCP2RL-2-30M | 2 | Switch with left front rotary operation | | | | | | | | |
| CCP2RL-3-30M | 3 | | | | | | | | | |
| CCP2S-2-30M | 2 | Switch with right side rotary operation | | | | | | | | |
| CCP2S-3-30M | 3 | | | | | | | | | |
| CCP2SL-2-30M | 2 | Switch with left side rotary operation | | | | | | | | |
| CCP2SL-3-30M | 3 | | | | | | | | | |
| **Single-pole DC switches** | | | | | | | | | | |
| CCP2-1-DCC | 1 | UL Class CC | 30 A | 80 Vdc† | 20 kA† | — | — | — | — | 75°C Cu/Al 18-4 AWG Fork terminal†† |
| CCP2-1-DCM | 1 | UL supplemental | 30 A | 80 Vdc† | 10 kA† | — | — | — | — | |
| | | IEC 10x38 | 32 A** | | | | | | | |

* See box lug terminal conductor data table for details.
**32 A Class aM, 25 A Class gG.
† SCCR may be lower, refer to installed fuse data sheet for interrupting rating at applied voltage.
††Fork terminal with a 4.3 mm gap for a #8-32 stud, 30 A max, insulated flange, wire size 12-10 AWG.

## Box lug terminal conductor data

| Type | AWG range | Class | Quantity | Torque N•m (lb-in) |
|---|---|---|---|---|
| Cu | 4-18 | Stranded, Class B to K | Single | 2.26 (20) |
| | 6-8 | Stranded, Class B/C | Dual | 3.39 (30) |
| | 6-8 | Stranded, Class K | Dual | 2.26 (20) |
| | 10-18 | Stranded, Class B to K | | |
| | 10-18 | Solid | Single/dual | |
| | 4-18 | Stranded, UL ferrule, Class B/C | Single | 3.39 (30) |
| | 6-18 | | Twin† | |
| | 4-18 | Stranded, UL ferrule, Class K | Single | 2.82 (25) |
| | 6-18 | | Twin† | |
| Al | 4-8 | Stranded | Single | 2.26 (20) |
| | 6 | | Dual | 2.82 (25) |
| | 8 | | | 2.26 (20) |

† Two stranded conductors placed in one UL Listed twin ferrule.

## Available Bussmann series fuses

| Fuse class | Type/description | Volts | Data sheet no. |
|---|---|---|---|
| CC | LP-CC time-delay | 600 Vac/300 Vdc* | 1023 |
| | FNQ-R time-delay | 600 Vac/300 Vdc | 1014 |
| | KTK-R fast-acting | 600 Vac | 1015 |
| M | FNM time-delay | 250 Vac | 2028 |
| | FNQ time-delay | 500 Vac | 1012 |
| | KTK fast-acting | 600 Vac | 1011 |
| | BAF fast-acting | 250 Vac | 2011 |
| | KLM fast-acting | 600 Vac/dc | 2020 |
| gG/gL | C10G | 500 V (400 V@32 A) | 720115 |
| aM | C10M | 500 V (400 V@20@25 A) | 720115 |

* 1/2 to 2-1/2 and 20 to 30 A are 300 Vdc, 2-8/10 to 15 A are 150 Vdc.

## Dimensions – mm (in)

### Switch

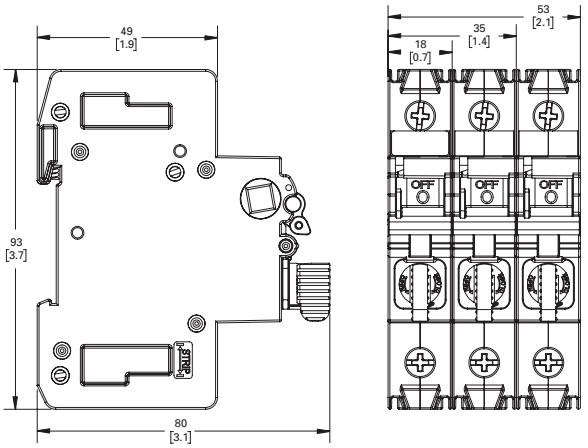


### Left front and right front rotary switches

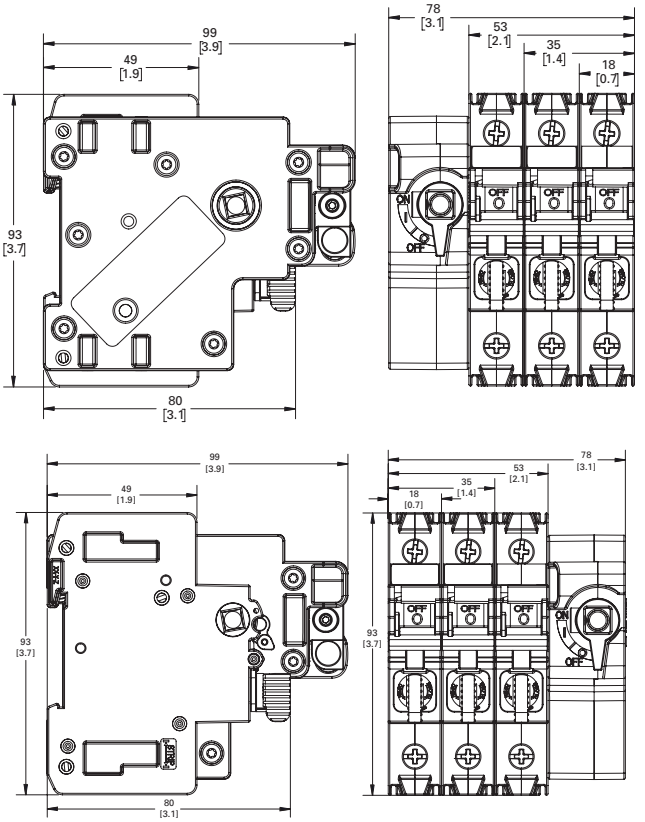


### Left side and right side rotary switches

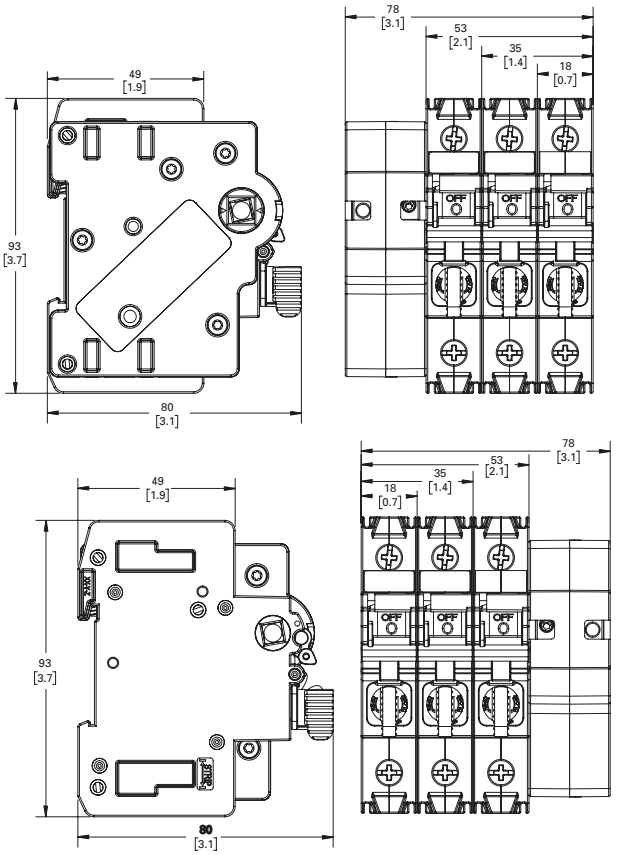

## Multi-wire lug kit

### Catalog number

- CCP2-MW1-3

### Description

The multi-wire lug kit permits expanding each box lug terminal on the switch into a three-port terminal for power distribution applications.

Each multi-wire lug kit comes with three (3) three-port lugs and three terminal shrouds. Shrouds provide finger-safe protection when properly installed.

Lugs may be mounted on either the loadside or lineside to meet various application needs.

Ports on any one lug accept any conductor combination listed, e.g., one of the three ports may have dual 14 AWG wires and the other two ports single 10 AWG wires.

### Ratings

- Volts 600 V
- Amps 60 A max
- SCCR 200 kA

### Agency information

- UL Recognized (lug only)
- RoHS compliant

### Storage and operating temperature

- - 20°C to 75°C (-4°F to 167°F)

### Multi-wire lug conductor information

- 75°C Cu/AL
- AWG size and quantity per port - see table below

| Type | AWG range | Class | Quantity | Torque N•m (lb-in) |
|---|---|---|---|---|
| Cu/Al | 4-6 | Stranded, Class B/C | Single | 3.95 (35) |
| | 8 | | | 2.82 (25) |
| Cu | 10-14 | Stranded, Class B/C | Single/dual* | 2.26 (20) |
| | 10-14 | Solid | Single | 2.26 (20) |
| | 8 | UL ferrule, Class B to K | Single/twin† | 2.82 (25) |
| | 10-14 | | | 2.26 (20) |

* Dual wire to be same size and type.
† Two stranded conductors placed in one UL Listed twin ferrule.

### CCP2 box lug torque for multi-wire lug

- 4.52 N•m (40 lb-in)

### Terminal shroud accessory

Terminal shrouds are available without multi-wire terminals.

| Catalog no. | Description |
|---|---|
| CCP2-TS1-3 | Pack of three |

### Installed on CCP2-3-xx

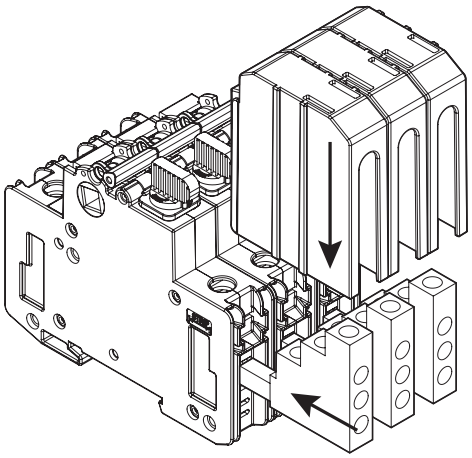

Multi-wire lugs mount in switch box lug terminals to provide three additional wire ports per pole. Lugs can be mounted on the switch lineside or loadside. Each multi-wire lug kit comes with three lugs and three shrouds.

### Wire insulation strip lengths

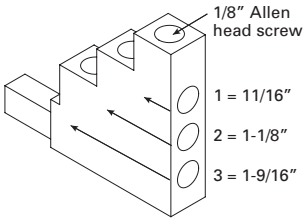


Strip back wire insulation to the lengths as indicated in the illustration above and the table below.

| Lug port | Strip wire insulation back (inch) |
|---|---|
| 1 | 11/16 |
| 2 | 1-1/8 |
| 3 | 1-9/16 |

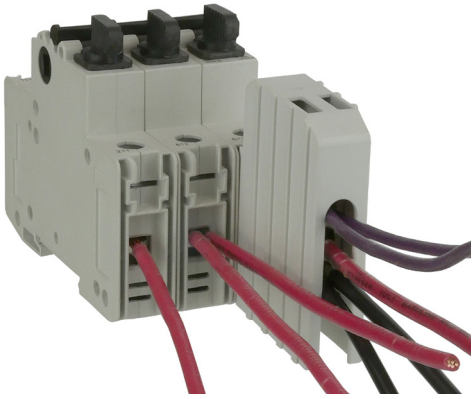

Wiring versatility is provided by single/dual rated box lug terminals on the switch, or by the three-port multi-wire lug kit that's also single/dual wire rated.

## Selector and pistol handles

### Catalog symbol

- CCP2-H4X-_

### Description

Selector and pistol handles for use with any 2- and 3-pole CCP2 rotary operated switch. Both selector and pistol handles are available in black/grey and red/yellow colors and clockwise/counterclockwise operating modes. Applying clockwise and counterclockwise operation depends upon the CCP2 rotary switch configuration. Installation requires an 8 mm shaft (ordered separately).

Each handle is rated NEMA 4X and capable of accepting up to three (3) 1/4" diameter shank locks for lockout/tagout in the OFF position. They can also be field configured for lock-on.

In application, only the clockwise operating handles in combination with either the left front or right front rotary switches provide a door interlock means to ensure the enclosure door remains shut during lockout/tagout or lock-on. Both clockwise and counterclockwise operating handles when mounted on the enclosure's left or right side do NOT provide a door interlock means.

See the catalog number table below for applicable rotary switch, handle and shaft combinations.

### Agency information

- UL Listed, Guide DIHS, File E140305
- NEMA 4X rating
- RoHS compliant
- CE

### Storage and operating temperature

- -20°C to 75°C (-4°F to 167°F)

### Packaging

- Each handle is packaged individually

## Handle shafts

### Catalog symbol

- CCP2-SH1-_

### Description

Eight millimeter square shafts available in 290 and 490 millimeter (11.5 and 19.3 inch) lengths. Shafts are indexed to ensure handle/switch orientation for correct operation. Shafts are cut to length when installed.

### Packaging

- Each shaft is packaged separately

### Selector handles

### Pistol handles

### Handle shafts

### NFPA 79 compliant handle

### Catalog number

- CCP2-NFPA-1

### Description

NFPA 79 compliant handle mounts on the shaft of front rotary operated switch installations and provide a lockout means independent of the door position.

| For these switch catalog numbers | Description/operation | Order these handle catalog numbers (description) | Order either shaft catalog number |
|---|---|---|---|
| CCP2R-(pole)-30CC | Right front rotary, clockwise | • CCP2-H4X-B1 (selector, black/grey)<br>• CCP2-H4X-R1(selector, red/yellow)<br>• CCP2-H4X-B2 (pistol, black/grey)<br>• CCP2-H4X-R2 (pistol, red/yellow) | • CCP2-SH1-290 (11.5"/290 mm)<br>• CCP2-SH1-490 (19.3"/490 mm) |
| CCP2R-(pole)-30M | | | |
| CCP2RL-(pole)-30CC | Left front rotary, clockwise | | |
| CCP2RL-(pole)-30M | | | |
| CCP2S-(pole)-30CC | Right side rotary, clockwise | | |
| CCP2S-(pole)-30M | | | |
| CCP2SL-(pole)-30CC | Left side rotary, counterclockwise | • CCP2-H4X-B1L (selector, black/grey)<br>• CCP2-H4X-R1L (selector, red/yellow)<br>• CCP2-H4X-B2L (pistol, black/grey)<br>• CCP2-H4X-R2L (pistol, red/yellow) | |
| CCP2SL-(pole)-30M | | | |

## Auxiliary contacts

### Catalog number

- CCP2-AUX

### Description

NO+NC contact output to indicate the switching mechanism status on the CCP2. A single unit can be mounted on any 1-, 2- or 3-pole CCP2 switch and the left front/left side rotary operated switches.

### Ratings

- Amps up to 5 A
- Volts up to 240 Vac
- NC/NO contacts are closed/open when the CCP2 switch is in the "ON" position (closed)

| Description | Max per CCP2* | Signal output |
|---|---|---|
| Auxiliary contacts NO+NC for switch status | 1 per CCP2 (1-, 2- or 3-pole) | 5 A / 240 Vac |

* The CCP2-AUX CANNOT be mounted on the right front and right side rotary operated versions.
De-energize all circuits and follow all prevailing safety procedures before installing or removing the CCP2-AUX.

### Agency information

- UL 98 Recognized, Guide WHTY2, File E155130
- cURus to Canadian Standard 22.2 No. 4-04
- IP20 finger-safe in installed state
- RoHS compliant
- CE

### Wiring

- 75°C Cu, 20-16 AWG (0.5 to 1.5 mm²) wire
- Torque 0.56 N•m (5 lb-in)

### Packaging

- The CCP2-AUX is packaged individually

### Installation technique

- Mounts on the CCP2's right side ONLY and mechanically interlocks with the CCP2 switch handle with provided hardware. The CCP2-AUX CANNOT be mounted on the right front and right side rotary operated versions.

### Storage and operating temperature

- -20°C to 75°C (-4°F to 167°F)

### Installed on a CCP2-3-xx

**Note:** CCP2-AUX **CANNOT** be mounted on the right front and right side rotary operated versions.

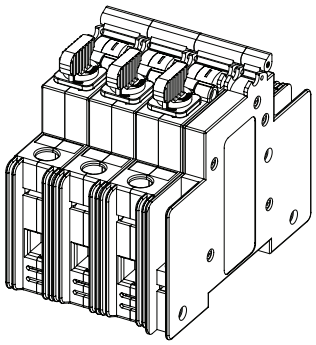

### Dimensions — in

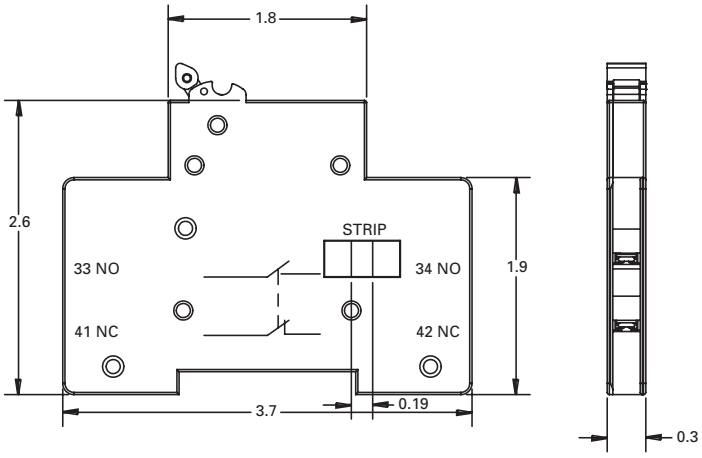

CCP2-AUX auxiliary contacts mounted on a 3-pole CCP2 switch.

## PLC fuse monitor

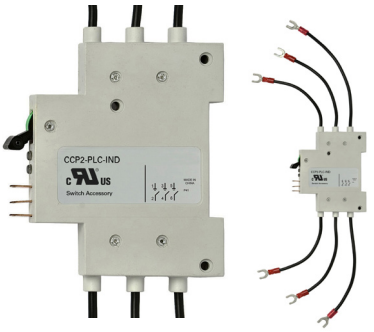


### Catalog number

- CCP2-PLC-IND

### Description

A resettable three-phase fuse monitor that integrates with the I/O card in a Programmable Logic Controller (PLC). A single unit can be mounted on any 1-, 2- or 3-pole CCP2 switch and the right front/ right side rotary operated switches. A single unit monitors up to three phases. When used on 1- and 2-pole switches unused conductor(s) are removed after installation.

The CCP2-PLC-IND **CANNOT** be mounted on the left front/left side rotary operated versions or if the multi-wire lug kit is installed.

### Ratings

- Signal output to PLC*
  - +24 Vdc, 10 mA max
- Output signals
  - Digital 0 Vdc (low), 24 Vdc max (high)
  - 0 Vdc Low – fuse is good
  - 24 Vdc High – fuse has opened

* When the fuse opens, the output signal is sent high and will remain high until the unit is reset.

### Emissions and immunity testing

- IEC 60947-1: Voltage Switchgear and Control Gear
- IEC 61000-6-2: Electromagnetic Compatibility (EMC)
  - IEC 61000-4-2: Electrostatic Discharge Immunity - Test at level 3 (6 kV-Contact Discharge) and level 2 (4 kV-Air Discharge)
  - IEC 61000-4-3: Electromagnetic Compatibility - Radiated, Radio-frequency, Electromagnetic Field Immunity test at level x (20 V/m)
  - IEC 61000-4-4: Electromagnetic Compatibility - Testing and Measurement Techniques at level 3 (± 2 kV - Power Port and ±1 kV - I/O Ports)
  - IEC 61000-4-5: Electromagnetic Compatibility - Surge Immunity test at level 4 (±4 kV)
  - IEC 61000-4-6: Immunity to Conducted Disturbances at level 3 (10 V)

| Description | Max per CCP2** | Signal output to PLC | Min. circuit volts |
|---|---|---|---|
| Wired remote fuse indication for PLC applications | 1 per CCP2 (1, 2- or 3-pole) | 24 Vdc/ 10 mA | 100 Vac |

**The CCP2-PLC-IND CANNOT be mounted on the left front/left side rotary operated versions or if the multi-wire lug kit is installed.

De-energize all circuits and follow all prescribed safety procedures before installing or removing the CCP2-PLC-IND.

### Agency information

- UL 98 Recognized, Guide WHTY2, File E155130
- cURus to Canadian, Standard 22.2 No. 4-04

### Local indication

- Two distinct LEDs indicate unit power (green) and open fuse (red). Open fuse LED is resettable upon fuse replacement and actuating the reset switch.

### Wiring

- For power, signal and ground connections use shielded twisted pair 22-24 AWG (0.34-0.25 mm$^2$) 300 V rated wire

### Packaging

- The CCP2-PLC-IND is packaged individually
- Includes 0.110" (2.8 mm) quick connects for power, signal and ground connections

### Installation technique

- Mounts on the left side ONLY of the CCP2 and mechanically interlocks with the CCP2 switch handle with hardware provided. The CCP2-PLC-IND **CANNOT** be mounted on the left front/ left side rotary operated versions or if the multi-wire lug kit is installed.

### IP20 rating — yes

### Storage and operating temperature

- -20°C to 75°C (-4°F to 167°F)

### PLC programming

- The CCP2-PLC-IND signal line is designed to provide a digital input to a PLC I/O card. In this case, a Programmable Logic Control program must be written to properly interpret the input signal to the PLC. The PLC program should check for consecutive high signals before taking action on a critical process.

### Installed on a CCP2-3-xx

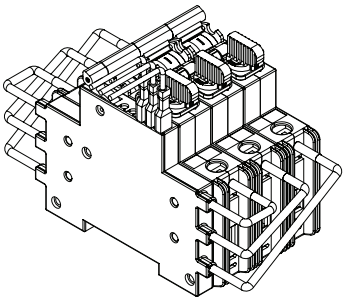

CCP2-PLC-IND mounted on a 3-pole switch and using the fork terminals. When mounted on a 2- or 1-pole switch, remove unused leads.

**Note:** The CCP2-PLC-IND **CANNOT** be mounted on the left front/left side rotary operated versions or if the multi-wire lug kit is installed.

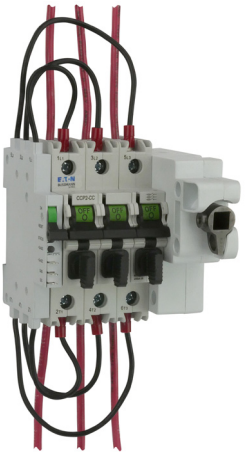

CCP2-PLC-IND fuse monitor mounted on a right front rotary operated switch.

### PLC wiring schematic

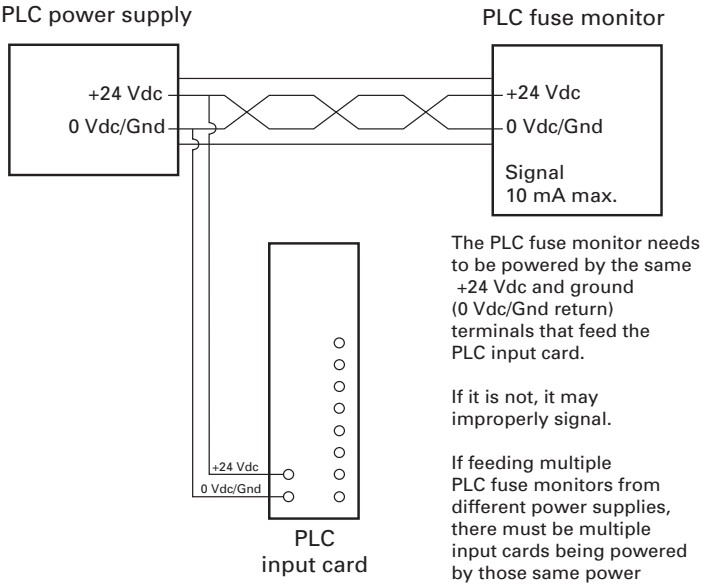


The PLC fuse monitor needs to be powered by the same +24 Vdc and ground (0 Vdc/Gnd return) terminals that feed the PLC input card.

If it is not, it may improperly signal.

If feeding multiple PLC fuse monitors from different power supplies, there must be multiple input cards being powered by those same power supplies as well.

### CCP2-PLC-IND connections from a CCP2-3-xx to a remote monitoring device

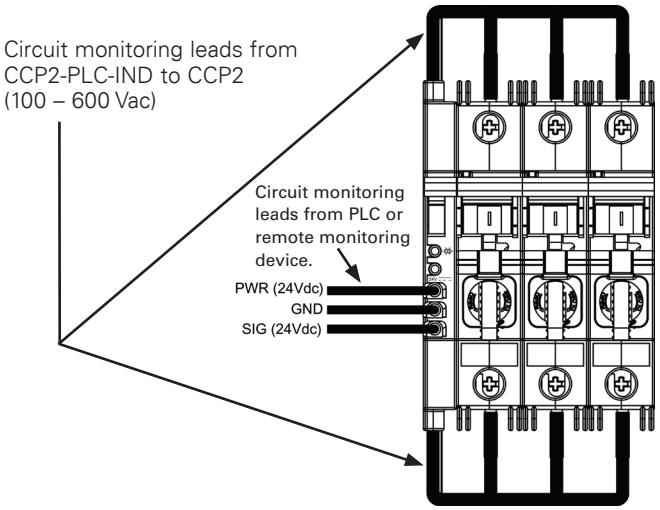


### Connection from CCP2-PLC-IND to CCP2-3-xx

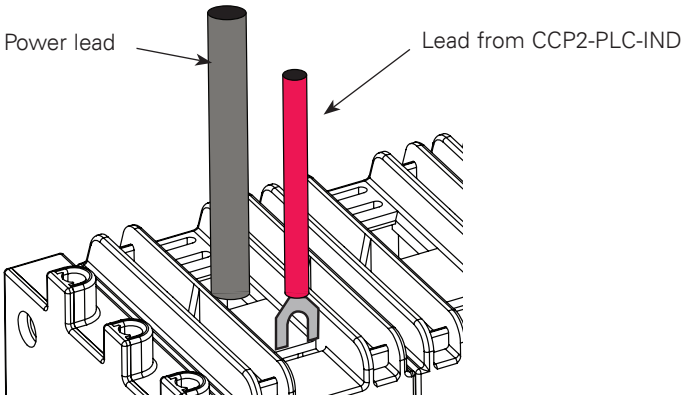


Leads from CCP2-PLC-IND are connected to the fork terminals as shown.

**Note**: When monitoring a 1- or 2-pole switch, remove unused leads.

## Dimensions — in

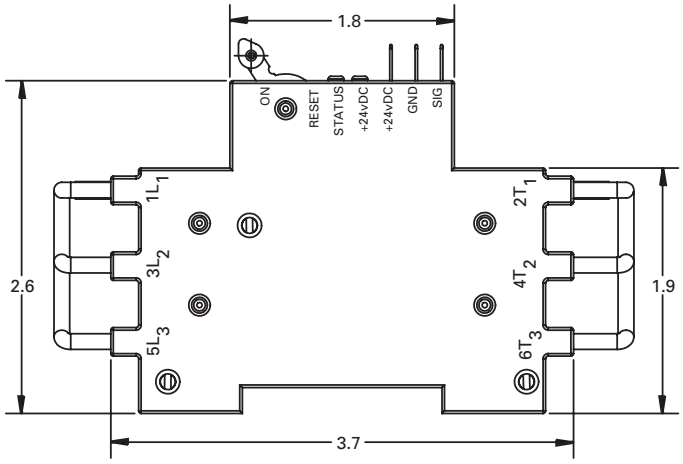


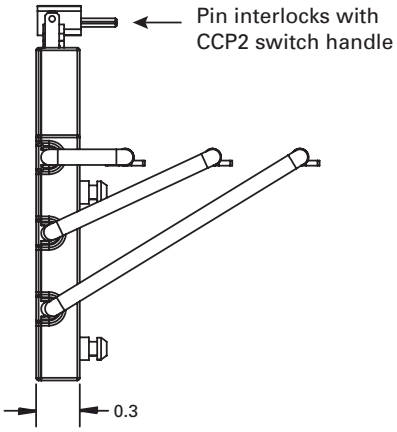

## Class CC and UL Supplemental (IEC 10x38) clockwise rotary switches

For a complete assembly, select from the following required and optional components, and accessories.

| | | Catalog no. | | |
|---|---|---|---|---|
| Required | | **Switches** | **Amps** | **Poles** |
| | | **Right front rotary** | | |
| | | CCP2R-2-30CC | 30 | 2 |
| | | CCP2R-3-30CC | | 3 |
| | | CCP2R-2-30M | | 2 |
| | | CCP2R-3-30M | | 3 |
| | | **Left front rotary** | | |
| | | CCP2RL-2-30CC | 30 | 2 |
| | | CCP2RL-3-30CC | | 3 |
| | | CCP2RL-2-30M | | 2 |
| | | CCP2RL-3-30M | | 3 |
| | | **Right side rotary** | | |
| | | CCP2S-2-30CC | 30 | 2 |
| | | CCP2S-3-30CC | | 3 |
| | | CCP2S-2-30M | | 2 |
| | | CCP2S-3-30M | | 3 |
| | | **And** | | |
| | | **Rotary handles** | **Description** | **NEMA rating** |
| | | CCP2-H4X-B1 | Selector handle — black/grey | 4X |
| | | CCP2-H4X-R1 | Selector handle — red/yellow | |
| | | CCP2-H4X-B2 | Pistol handle — black/grey | |
| | | CCP2-H4X-R2 | Pistol handle — red/yellow | |
| | | **And** | | |
| | | **Shafts (8 mm)** | **Length** | |
| | | CCP2-SH1-290 | 290 mm | |
| | | CCP2-SH1-490 | 490 mm | |
| | | **NFPA 79 compliant handle** | **Color** | |
| | | CCP2-NFPA-1 | Red | |
| **And** | | | | |
| Optional | | **Lug kits** | **Description** | |
| | | CCP2-MW1-3 | 3-port multi-wire, 75°C Cu/Al, 6-14, includes terminal shrouds, pack of 3 | |

| And | | | |
|---|---|---|---|
| Accessories | | **Terminal shrouds** | **Description** |
| | | CCP2-TS1-3 | Pack of 3 |
| | | **Auxiliary contacts** | **Description — cannot be used on right front or right side operated switches** |
| | | CCP2-AUX | NO + NC, 5 A / 240 V |
| | | **PLC fuse monitor** | **Description — Cannot be used on left front operated switches** |
| | | CCP2-PLC-IND | Signal output 24 Vdc / 10 mA |

## Class CC and UL Supplemental (IEC 10x38) Switches

For a complete assembly, select from the following required and optional components, and accessories.

| | | Catalog no. | | |
|---|---|---|---|---|
| | | **Switches** | **Amps** | **Poles** |
| | | **Switch** | | |
| Required | | CCP2-1-30CC | 30 | 1 |
| | | CCP2-2-30CC | | 2 |
| | | CCP2-3-30CC | | 3 |
| | | CCP2-1-30M | | 1 |
| | | CCP2-2-30M | | 2 |
| | | CCP2-3-30M | | 3 |
| **And** | | | | |
| Optional | | **Lug kits** | **Description** | |
| | | CCP2-MW1-3 | 3-port multi-wire, 75°C Cu/Al, 6-14, includes terminal shrouds, pack of 3 | |
| **And** | | | | |
| Accessories | | **Terminal shrouds** | **Description** | |
| | | CCP2-TS1-3 | Pack of 3 | |
| | | **Auxiliary contacts** | **Description** | |
| | | CCP2-AUX | NO + NC, 5 A / 240 V | |
| | | **PLC fuse monitor** | **Description** | |
| | | CCP2-PLC-IND | Signal output 24 Vdc / 10 mA | |

## Class CC and UL Supplemental (IEC 10x38) counterclockwise switches

For a complete assembly, select from the following required and optional components, and accessories.

| | | | | |
|---|---|---|---|---|
| Required | | **Catalog no.** | | |
| | | **Switches** | **Amps** | **Poles** |
| | | **Left side rotary** | | |
| | | CCP2SL-2-30CC | 30 | 2 |
| | | CCP2SL-3-30CC | | 3 |
| | | CCP2SL-2-30M | | 2 |
| | | CCP2SL-2-30M | | 2 |
| | | **And** | | |
| | | **Rotary handles** | **Description** | **NEMA rating** |
| | | CCP2-H4X-B1L | Selector handle — black/grey | 4X |
| | | CCP2-H4X-R1L | Selector handle — red/yellow | |
| | | CCP2-H4X-B2L | Pistol handle — black/grey | |
| | | CCP2-H4X-R2L | Pistol handle — red/yellow | |
| | | **And** | | |
| | | **Shafts (8 mm)** | **Length** | |
| | | CCP2-SH1-290 | 290 mm | |
| | | CCP2-SH1-490 | 490 mm | |
| **And** | | | | |
| Optional | | **Lug kits** | **Description** | |
| | | CCP2-MW1-3 | 3-port multi-wire, 75°C Cu/Al, 6-14, includes terminal shrouds, pack of 3 | |
| **And** | | | | |
| Accessories | | **Terminal shrouds** | **Description** | |
| | | CCP2-TS1-3 | Pack of 3 | |
| | | **Auxiliary contacts** | **Description —mounts on right side** | |
| | | CCP2-AUX | NO + NC, 5 A / 240 V | |

## CCPLP UL 98 Listed low profile Compact Circuit Protector

RoHS 2011/65/EU

The revolutionary Bussmann series low profile Compact Circuit Protector (CCPLP) is a UL 98/508 Listed fused disconnect switch. This front panel mount switch is available in 1-, 2- and 3-pole versions, and has the smallest footprint of any fused disconnect switch. It features an SCCR up to 200 kA to help improve equipment SCCR.

### Four fuse types

The CCPLP is available for UL Class CC and G, UL supplemental (13/32″ x 1-1/2″) and IEC 10x38 mm fuses.

Class CC and G versions are easily selectively coordinated with the upstream Bussmann series CUBEFuse™ using published fuse ampacity ratio tables.

### Design/application flexibility

The CCPLP is easily integrated into many panel designs and provides a high SCCR alternative to low profile circuit breakers on the market.

### Ratings

- Volts
  - 600 Vac (Class CC up to 30 A, Class G 20 A)
  - 550 Vac (10x38mm IEC Class aM 0.16-16 A)
  - 500 Vac (10x38mm IEC Class gG 0.5-25 A)
  - 400 Vac (10x38mm IEC Class aM 20-32 A, gG 32 A)
  - 240 Vac (13/32″ x 1-1/2″ UL supplemental 30 A)
- Amps
  - Up to 30 A (UL)
  - Up to 32 A (IEC)
- SCCR
  - 200 kA (Class CC)
  - 120 kA (10x38mm IEC Class gG and aM)
  - 100 kA (Class G)
  - 10 kA (13/32″ x 1-1/2″ UL supplemental)
- Frequency 50/60 Hz
- Impulse voltage 8 kV

### Terminals and conductors 75°C/90°C Cu

- Screw terminal, 10-32 phil-slot screw with external tooth lock washer (use with properly rated/UL Listed ring or fork terminal)
- Pressure plate terminal, 10-32 phil-slot screw (single 22-6 AWG solid or stranded)

### Ambient storage and operating temperature

- -20 to 90°C, 85% relative humidity, non-condensing

### Poles

1-, 2- and 3-pole factory configured*

* 2- and 3-pole versions supplied as ganged switches with phase barriers.

### Agency information

- Class G fuse versions
  - UL 98 Listed, Guide WHTY, File E302370
  - IEC 60947-3 AC-23A
- Class CC fuse versions
  - UL 98 Listed, Guide WHTY, File E302370
  - cULus to Canadian Standard 22.2 No. 4-04, Guide WHTY7, File E302370
  - IEC 60947-3 AC-23A
- UL supplemental and IEC 10x38mm fuse versions
  - UL 508 Listed, Guide NRNT, File E320230
  - cULus Listed to Canadian Standard 22.2 No. 14-05, Guide NRNT7, File E320230
  - IEC 60947-3 AC-23A
- RoHS compliant
- CE

### Safety

- Finger-safe IP20 from panel front

### Mounting

- Front panel mounting with customer supplied M3 screws

### Open fuse indication*

- Local open fuse indication provided for each pole by an orange neon lamp (minimum 90 V)

* Open fuse indication requires an energized, closed circuit with an open fuse in the CCPLP and the switch in the ON position.

### Lockout/tagout provision

- Brady pin-out device, part number 90844

### Circuit labeling provision

- Accepts up to two universal marker labels, catalog number TM26CB

### Carton quantity

- 12 poles (1-pole: 12 units, 2-pole: 6 units, 3-pole: 4 units)

### Minimum enclosure size

- 6″ x 6″ x 4″ per UL 98 Listing

**Data sheet no.10372**

## Available CCPLP versions

| Catalog no. | | | | | SCCR | Horsepower (Vac) | | | |
|---|---|---|---|---|---|---|---|---|---|
| Screw terminal | Pressure plate terminal | Poles | Volts AC | Amps | (kA) | 120 | 240 | 480 | 600 |
| **UL Class G fuse** | | | | | | | | | |
| CCPLP-1-20G-S | CCPLP-1-20G-P | 1 | | | | — | — | — | — |
| CCPLP-2-20G-S | CCPLP-2-20G-P | 2 | 600 | 20 | 100 | — | — | — | — |
| CCPLP-3-20G-S | CCPLP-3-20G-P | 3 | | | | — | — | — | — |
| **UL Class CC fuses** | | | | | | | | | |
| CCPLP-1-30CC-S | CCPLP-1-30CC-P | 1 | | | | 0.5 | — | — | — |
| CCPLP-2-30CC-S | CCPLP-2-30CC-P | 2 | 600 | 30 | 200 | — | 2 | — | — |
| CCPLP-3-30CC-S | CCPLP-3-30CC-P | 3 | | | | — | 3 | 4 | 7. 5 |
| **UL 13/32"x1-1/2" midget fuses** | | | | | | | | | |
| CCPLP-1-30M-S | CCPLP-1-30M-P | 1 | | | | — | — | — | — |
| CCPLP-2-30M-S | CCPLP-2-30M-P | 2 | 240 | 30 | 10 | — | — | — | — |
| CCPLP-3-30M-S | CCPLP-3-30M-P | 3 | | | | — | — | — | — |
| **IEC 10x38 gG and aM fuses** | | | | | | | | | |
| CCPLP-1-30M-S | CCPLP-1-30M-P | 1 | gG fuses: up to 25 A @ 500 V 32 A @ 400 V | | 120 | — | — | — | — |
| CCPLP-2-30M-S | CCPLP-2-30M-P | 2 | aM fuses: up to 16 A @ 550 A 20-23 A @ 400V | | 120 | — | — | — | — |
| CCPLP-3-30M-S | CCPLP-3-30M-P | 3 | | | 120 | — | — | — | — |

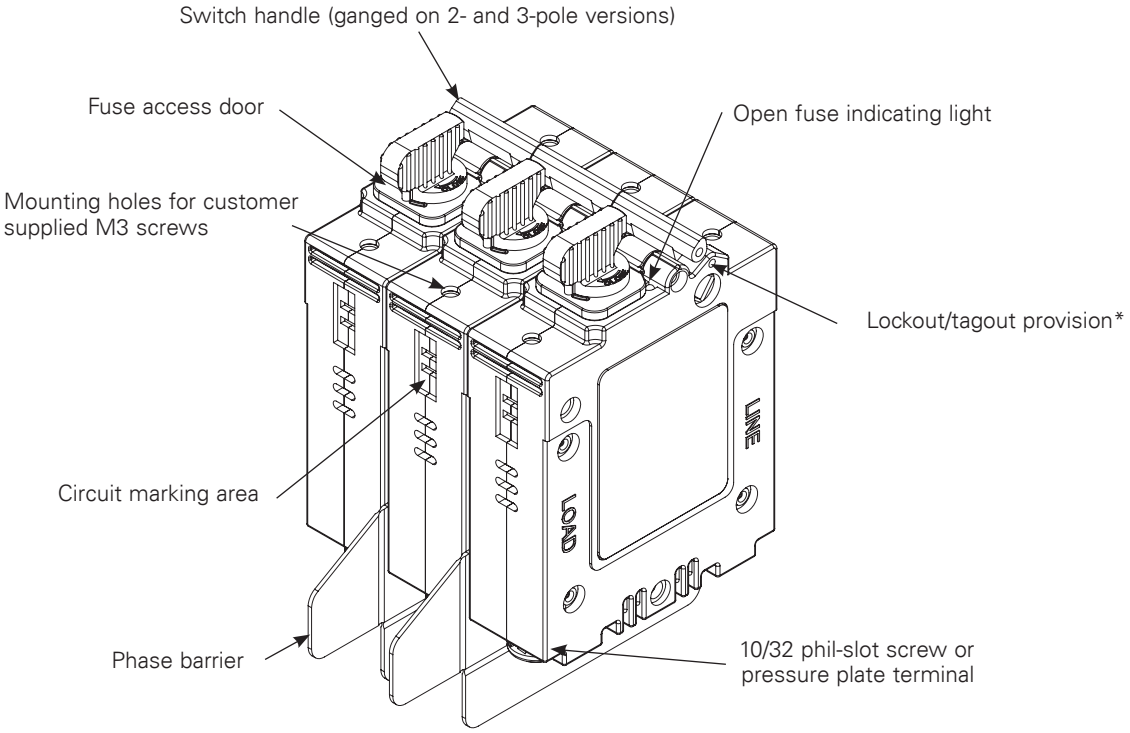


* Use Brady pin-out device, P/N 90844

## Available Bussmann series fuses

| Fuse class | Catalog symbol |
|---|---|
| CC | FNQ-R, KTK-R, LP-CC |
| G | SC |
| M | BAF, FNM, FNQ, KLM, KTK |
| gG | C10G |
| aM | C10M |

Data sheet no.10372

## UL 98 fused disconnect switches up to 800 A

Bussmann series UL 98 and UL 489 fused disconnect switches "break" and "make" power circuits ON and OFF load.

The switches employ double break contacts per pole that help ensure complete isolation of the fuse when the switch is in the "OFF" position.

### Agency information

- UL 98, Guide WHTY, File E155130
- UL 489, Guide WJAZ, File E359801
- CSA 22.2 No. 4, File 257020
- Conforms with IEC 60947-3
- NFPA 79

### Features

- Make and break power under load
- Double break by pole
- 30-60 A DIN-Rail or panel mount, 100-800 A panel mount only
- Up to 200 kA short-circuit current rating
- Finger-safe covers
- Compact footprints available
- Defeatable handles automatically re-latch when the panel door is closed
- Most disconnect switches are front, right side, flange or direct handle operable
- NFPA 79 compliant handle kits

### Online resources available at Eaton.com/bussmannseries

- CAD drawings
- Instruction sheets
- UL information

### Available Bussmann series fuses

| Fuse class | Catalog symbol/type |
|---|---|
| CC | LP-CC time-delay, current limiting |
| | FNQ-R time-delay |
| | KTK-R fast-acting |
| J | LPJ time-delay, current limiting |
| | JKS fast-acting fuses |
| | DFJ high speed drive fuse |
| L | KRP-C time-delay, current limiting |
| | KTU fast-acting |
| | KLU time-delay |
| | KRP-CL (225-600 A) |

## UL 98 fused disconnect switches — 30 to 800 A

RDF30CC-3

RDF30J-3 / RDF60J-3-COMP

RDF60J-3

RDF200J-3

RDF600J-3

| Poles | | Catalog no. | | | | | | | | | |
|---|---|---|---|---|---|---|---|---|---|---|---|
| **2-pole** | | **—** | **—** | **RDF30J-2** | **RDF60J-2-COMP** | **RDF60J-2** | **RDF100J-2** | **RDF200J-2** | **RDF400J-2** | **RDF600J-2** | **RDF800L-2** |
| **3-pole** | | **RDF30CC-3** | **RDF30J-3-COMP** | **RDF30J-3** | **RDF60J-3-COMP** | **RDF60J-3** | **RDF100J-3** | **RDF200J-3** | **RDF400J-3** | **RDF600J-3** | **RDF800L-3** |
| **3-pole + neutral** | | **RDF30CC-3N** | **RDF30J-3N-COMP** | **—** | **—** | **—** | **—** | **—** | **—** | **—** | **—** |
| **4-pole** | | **—** | **—** | **RDF30J-4** | **RDF60J-4-COMP** | **RDF60J-4** | **RDF100J-4** | **RDF200J-4** | **RDF400J-4** | **RDF600J-4** | **RDF800L-4** |
| UL standard | | UL 489 | UL 489 | UL 98 | UL 98 | UL 98 | UL 98 | UL 98 | UL 98 | UL 98 | UL 98 |
| Fuse class | | CC | J | J | J | J | J | J | J | J | L |
| Max fuse/ampacity | | 30 | 30 | 30 | 60 | 60 | 100 | 200 | 400 | 600 | 800 |
| Switch type | | Compact | Compact | Standard | Compact | Standard | Standard | Standard | Standard | Standard | Standard |
| Handle operation | | Front | Front | Front/Side | Front/Side | Front/Side | Front/Side , Flange | Front/Side , Flange | Front/Side , Flange | Front , Flange | Front , Flange |
| UL electrical ratings | | | | | | | | | | | |
| Max AC volts | | 600 Vac | 600 Vac | 600 Vac | 600 Vac | 600 Vac | 600 Vac | 600 Vac | 600 Vac | 600 Vac | 600 Vac |
| Max DC volts* | | — | — | 250 Vdc | 250 Vdc | 250 Vdc | 250 Vdc | — | 250 Vdc | 600 Vdc | 600 Vdc |
| Std. AC Hp ratings | 1-phase, 240 | — | — | 3 | 10 | 10 | 10 | 10 | 10 | — | — |
| | 3-phase, 240 | 3 | 3 | 3 | 7.5 | 7.5 | 15 | 25 | 50 | 75 | 75 |
| | 3-phase, 480 | 5.0 | 5.0 | 5.0 | 15 | 15 | 25 | 50 | 100 | 150 | 200 |
| | 3-phase, 600 | 7.5 | 7.5 | 7.5 | 15 | 15 | 30 | 60 | 125 | 200 | 250 |
| Max. AC Hp ratings | 3-phase, 240 | 7.5 | 7.5 | 7.5 | 15 | 15 | 30 | 60 | 125 | 200 | 200 |
| | 3-phase, 480 | 15 | 15 | 15 | 30 | 30 | 60 | 125 | 250 | 400 | 500 |
| | 3-phase, 600 | 20 | 20 | 20 | 50 | 50 | 75 | 150 | 350 | 500 | 500 |
| DC Hp ratings | 125 Vdc | — | — | 3 | 5 | 5 | 7.5 | — | 20 | — | — |
| | 250 Vdc | — | — | 5 | 10 | 10 | 20 | — | 50 | — | — |
| Electrical characteristics | | | | | | | | | | | |
| SCCR | | 100 kA | 100 kA | 200 kA | 100 kA | 200 kA | 200 kA | 200 kA | 200 kA | 200 kA | 200 kA |
| Terminal lugs/kits | | Integral | Integral | Integral | Integral | Integral | Integral | • | • | • | • |
| Mounting torque - lb-in (N•m) | | — | — | — | — | — | — | 160 (18) | 310 (35) | 310 (35) | 310 (35) |
| Wire type | | 75°C Cu | 75°C Cu | 75°C Cu | 75°C Cu | 75°C Cu | 75°C Cu | 75°C Cu/ Al | 75°C Cu/ Al | 75°C Cu/ Al | 75°C Cu/ Al |
| Wire range, torque - lb-in (N•m) | Solid | 14-10, 27 (3.1) | 14-10, 27 (3.1) | 14-10, 31 (3.5) | 14-10, 31 (3.5) | 12-10, 35.4 (4) | 12-10, 35.4 (4) | — | — | — | — |
| | Stranded | 14-10 27 (3.1) | 14-10 27 (3.1) | 14-6 , 31 (3.5) | 14-6, 31 (3.5) | 12-1, 35.4 (4) | 12-1, 35.4 (4) | 6-300 kcmil, 275 (31) | 4-600 kcmil, 550 (62), Dual 1/0-250 kcmil 550 (62) | (2) 2-600 kcmil, 375 (42.4) | (2) 2-600 kcmil, 375 (42.4) |
| Mechanical characteristics | | | | | | | | | | | |
| Endurances/cycles | | 10,000 | 10,000 | 10,000 | 10,000 | 10,000 | 10,000 | 8000 | 6000 | 5000 | 5000 |
| Physical characteristics | | | | | | | | | | | |
| Dimensions | | See drawings on product pages | | | | | | | | | |
| Weight - lbs (kg) | 2-pole | — | — | 3.0 (1.3) | 3.1 (1.4) | 4.1 (1.8) | 4.1 (1.8) | 5.7 (2.6) | 11.4 (5.2) | 31.7 (14.4) | 31.7 (14.4) |
| | 3-pole | 1.3 (0.6) | 1.4 (0.6) | 3.8 (1.7) | 4.1 (1.8) | 5.3 (2.4) | 5.3 (2.4) | 7.8 (3.5) | 16.6 (7.6) | 44.2 (20.1) | 44.2 (20.1) |
| | 3-pole + neutral | 1.4 (0.6) | 1.5 (0.7) | — | — | — | — | — | — | — | — |
| | 4-pole | — | — | 4.7 (2.1) | 4.8 (2.2) | 6.49 (2.9) | 6.49 (2.9) | 10.8 (4.9) | 21.8 (9.9) | 56.8 (25.8) | 56.8 (25.8) |
| Environmental | | | | | | | | | | | |
| Operating temp. range | | -20-70°C | -20-70°C | -20-70°C | -20-70°C | -20-70°C | -20-70°C | -20-70°C | -20-70°C | -20-70°C | -20-70°C |
| Flammability rating | | UL 94-V0 | UL 94-V0 | UL 94-V0 | UL 94-V0 | UL 94-V0 | UL 94-V0 | UL 94-V0 | UL 94-V0 | UL 94-V0 | UL 94-V0 |
| Accessories | | | | | | | | | | | |
| Lug Kit | | Integral | Integral | Integral | Integral | Integral | Integral | • | • | • | • |
| Handles | Direct | • | • | • | • | • | • | • | • | • | • |
| | Front selector | • | • | — | — | — | — | — | — | — | — |
| | Front pistol | • | • | • | • | • | • | • | • | • | • |
| | Side pistol | — | — | • | • | • | • | • | • | — | — |
| Flange | Cable | — | — | • | • | • | • | • | — | — | — |
| | Shaft | — | — | • | • | • | • | • | — | — | — |
| NFPA through door handle | | • | • | • | • | • | • | • | • | • | • |
| Shafts c/s - mm | | 5x5 | 5x5 | 10x10 | 10x10 | 10x10 | 10x10 | 10x10 | 10x10 | 12X12 | 12X12 |
| Terminal shrouds | | Not Required | Not Required | Not Required | Not Required | Not Required | Not Required | • | • | • | • |
| Auxiliary contacts | (1) NO | • | • | • | • | • | • | • | • | • | • |
| | (1) NC | • | • | • | • | • | • | • | • | • | • |
| AC ratings | Volts | 600 | 600 | 600 | 600 | 600 | 600 | 600 | 600 | 600 | 600 |
| | Amps | 10 | 10 | 10 | 10 | 10 | 10 | 10 | 10 | 10 | 10 |

• Available, see product page for details and catalog numbers.
— Not available.
* General purpose only, not photovoltaic rated.

## UL 98 fused rotary disconnect switches — 30 A

### Standard 30 amp Class CC and compact 30 amp Class J

For a complete assembly, select:

**Select for standard applications**

**Switch**

**Switch**

| Amps | Fuse class | Poles | SCCR (kA) | Max Hp rating, 3-phase 220/240 | 440/480 | 600 | Conductor AWG size /type | Catalog no. |
|---|---|---|---|---|---|---|---|---|
| 30 | CC | 3 | 100 | 7.5 | 15 | 20 | 14-10 Sol/Str 75°C Cu | RDF30CC-3 |
| 30 | | 3 + Ntrl.* | 100 | 7.5 | 15 | 20 | | RDF30CC-3N |
| 30 | J | 3 | 100 | 7.5 | 15 | 20 | | RDF30J-3-COMP |
| 30 | | 3 + Ntrl.* | 100 | 7.5 | 15 | 20 | | RDF30J-3N-COMP |

* Neutral is switched.

**Plus**

**Handle**

**Direct mount handle - mounts directly to switch, no shaft required**

| For switch cat. no. | Color | Test function | Padlockable | Catalog no. |
|---|---|---|---|---|
| RDF30CC-_ | Black | Y | Y | DIR-05 |
| RDF30J-_-COMP | | | | DIR-06 |

**OR**

+

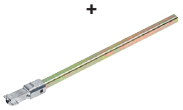

**External front operated selector handle - shaft required**

| NEMA type | Color | Test function | Padlockable | Defeatable | Catalog no. |
|---|---|---|---|---|---|
| 1, 3R, 4, 4X, 12 | Black | N | Y | Y | H4X-04B |
| 1, 3R, 4, 4X, 12 | Red/yellow | | | | H4X-04R |

**Shafts for selector handles**

| Length - in (mm) | Mounting depth (X) - in (mm) | Catalog no. |
|---|---|---|
| 7.9 (200) | 4.02~9.65 (102~245) | SH1-200 |
| 12.6 (320) | 4.02~14.37 (102~365) | SH1-320 |
| 15.7 (400) | 4.02~17.52 (102~445) | SH1-400 |

**OR**

or

+

**External front operated pistol handles - shaft required**

| NEMA type | Color | Test function | Padlockable | Defeatable | Catalog no. |
|---|---|---|---|---|---|
| 1, 3R, 12 | Black | N | Y | Y | H12-05B |
| 1, 3R, 12 | Red/yellow | | | | H12-05R |
| 1, 3R, 4, 4X, 12 | Black | | | | H4X-05B |
| 1, 3R, 4, 4X, 12 | Red/yellow | | | | H4X-05R |
| 1, 3R, 4, 4X, 12 | Black | Y | | | H4X-05TB |
| 1, 3R, 4, 4X, 12 | Red/yellow | | | | H4X-05TR |

**Metallic hasp (heavy duty) external front operated pistol handles - shaft required**

| NEMA type | Color | Test function | Padlockable | Defeatable | Catalog no. |
|---|---|---|---|---|---|
| 1, 3R, 4, 4X, 12 | Black | N | Y | Y | H4X-05BHD |
| 1, 3R, 4, 4X, 12 | Red/yellow | | | | H4X-05RHD |

**Shafts for pistol handles**

| Length - in (mm) | Mounting depth (X) - in (mm) | Catalog no. |
|---|---|---|
| 7.9 (200) | 4.02~9.65 (102~245) | SH2-200 |
| 12.6 (320) | 4.02~14.37 (102~365) | SH2-320 |
| 15.7 (400) | 4.02~17.52 (102~445) | SH2-400 |

**OR**

**NFPA through the door handle kit - to be used with front pistol handle**

| Color | Test function | Padlockable | Defeatable | Catalog no. |
|---|---|---|---|---|
| Red | N | Y | N | H79-1 |

**AND...**

**Accessories**

**Auxiliary contacts**

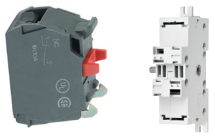

1 2

**Auxiliary contacts**

| Contact type | No. of contacts | Continuous amp rating | Voltage (Vac) | Maximum number of auxiliary contacts per disconnect switch catalog number | Catalog no. |
|---|---|---|---|---|---|
| NO | 1 | 10 | 600 | RDF30CC-_: 4 / 8 with BAC-HOLDER2 BAC05 (1) RDF30J-_-COMP: 2 /6 with BAC-HOLDER2 | BAC05 (1) |
| NC | | | | | BAC06 (1) |
| Auxiliary contact holder | | | | Accepts 4 Auxiliary contacts: BAC05 or BAC06 | BAC-HOLDER2 (2) |

**Dimensions — in (mm)**

RDF30CC-_

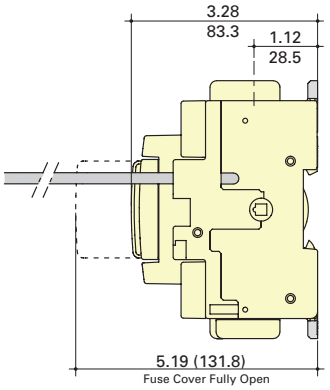


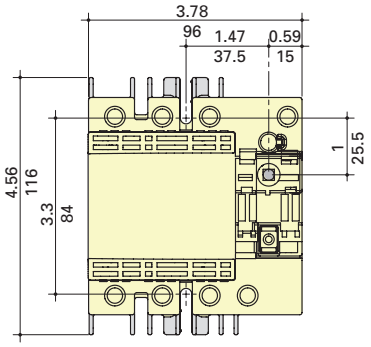


RDF30J-_-COMP

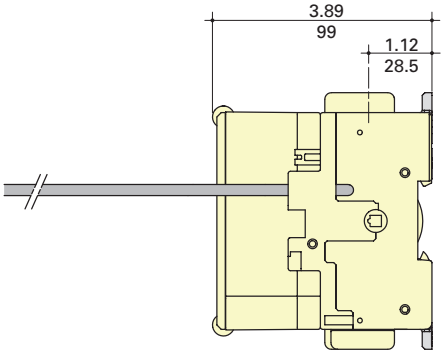


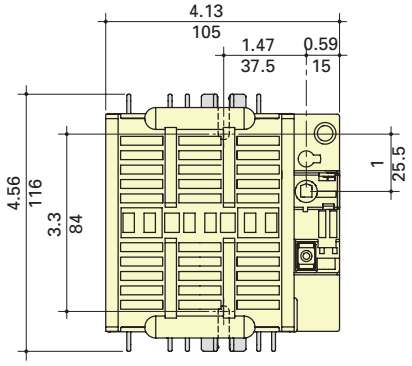


External front selector handle

Selector handle type

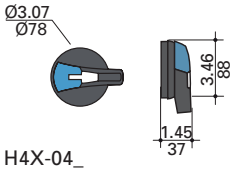


Direction of front operation

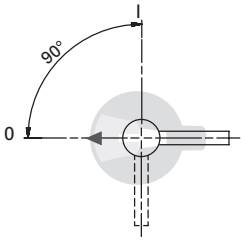


Door drilling layout

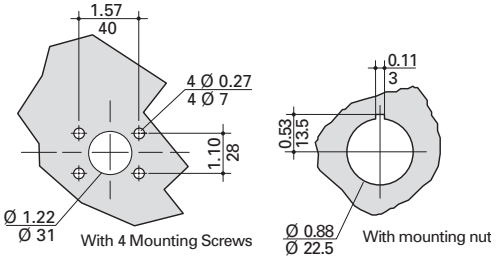


External front pistol handles

Pistol handle type

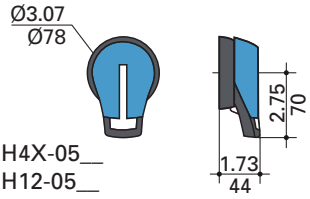


Direction of front operation

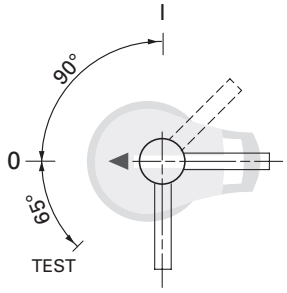


Door drilling layout

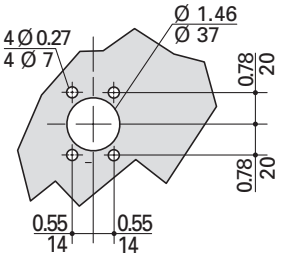

## Standard 30 amp Class J

### For a complete assembly, select:

**Switch**

| Amps | Fuse class | Poles | SCCR (kA) | Max horsepower rating 1-phase 220/240 | 1-phase 220/240 | 3-phase 440/480 | 3-phase 600 | DC* 125 | DC* 250 | Conductors AWG size / type | Catalog no. |
|---|---|---|---|---|---|---|---|---|---|---|---|
| 30 | J | 2 | 200 | 3 | - | - | - | 3 | 5 | 14-10 Sol/14-6 Str 75°C Cu | RDF30J-2 |
| | | 3 | | - | 7.5 | 15 | 20 | 3 | 5 | | RDF30J-3 |
| | | 4 | | - | 7.5 | 15 | 20 | 3 | 5 | | RDF30J-4 |

* DC ratings use two poles in series.

**PLUS**

**Direct mount handle - mounts directly to switch, no shaft required**

| For switch cat. no. | Color | Test function | Padlockable | Catalog no. |
|---|---|---|---|---|
| All switches | Black | Y | Y - On switch | DIR-07 |

**OR**

**External front operated pistol handles - shaft required**

| NEMA type | Color | Test function | Padlockable | Defeatable | Catalog no. |
|---|---|---|---|---|---|
| 1, 3R, 12 | Black | N | Y | Y | H12-05B |
| | Red/yellow | | | | H12-05R |
| 1, 3R, 4, 4X, 12 | Black | | | | H4X-05B |
| | Red/yellow | | | | H4X-05R |
| | Black | Y | | | H4X-05TB |
| | Red/yellow | | | | H4X-05TR |

Or

**Metallic hasp (heavy duty) external front operated pistol handles - shaft required**

| NEMA type | Color | Color | Test function | Padlockable | Defeatable | Catalog no. |
|---|---|---|---|---|---|---|
| 1, 3R, 4, 4X, 12 | | Black | N | Y | Y | H4X-05BHD |
| | | Red/yellow | | | | H4X-05RHD |

**External right side operated pistol handles - shaft required**

| NEMA type | Color | Test function | Padlockable | Defeatable | Catalog no. |
|---|---|---|---|---|---|
| 1, 3R, 4, 4X, 12 | Black | N | Y | N/A | H4X-05SB |
| | Red/yellow | | | | H4X-05SR |

\+

**Shafts for pistol handles**

| Length — in (mm) | Mounting depth (X) — in (mm) | Catalog no. |
|---|---|---|
| 7.9 (200) | 5.30~9.06 (135~230) | SH5-200 |
| 12.6 (320) | 5.30~13.78 (135~350) | SH5-320 |
| 15.7 (400) | 5.30~16.93 (135~430) | SH5-400 |

**OR**

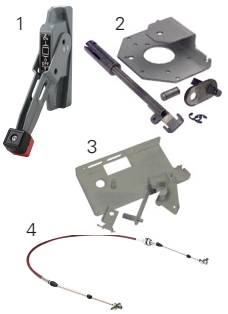


**Flange handle (1) - requires shaft operated mechanism or cable operated mechanism + cable**

| NEMA type | Flange style | Test function | Padlockable | Defeatable | Catalog no. |
|---|---|---|---|---|---|
| 1, 3R, 4, 12 | Standard | N | Y | Y | FLH1 |
| 1, 3R, 4, 4X, 12 | Chrome plated | | | | FLH2 |

**Shaft operated flange mechanism (2) - includes shaft**

| For enclosure depth - in (mm) | Catalog no. |
|---|---|
| 6~24 (152~613) | FLRM |

**Cable operated flange mechanism and cable - must select mechanism (3) and cable (4)**

| Item / length — in (mm) | Catalog no. |
|---|---|
| Cable mechanism | FLCM |
| 36 (900) cable | FLC36 |
| 60 (1500) cable | FLC60 |
| 120 (3000) cable | FLC120 |

**OR**

**NFPA through the door handle kit - to be used with front pistol handle**

| Color | Test function | Padlockable | Defeatable | Catalog no. |
|---|---|---|---|---|
| Red | N | Y | N | H79-2 |

**AND...**

**Auxiliary contacts**

| Contact type | No. of contacts | Continuous amp rating | Voltage (Vac) | Max. aux contacts per switch | Catalog no. |
|---|---|---|---|---|---|
| NO | 1 | 10 | 600 | 4 | BAC05 |
| NC | | | | | BAC06 |

**Dimensions — in (mm)**

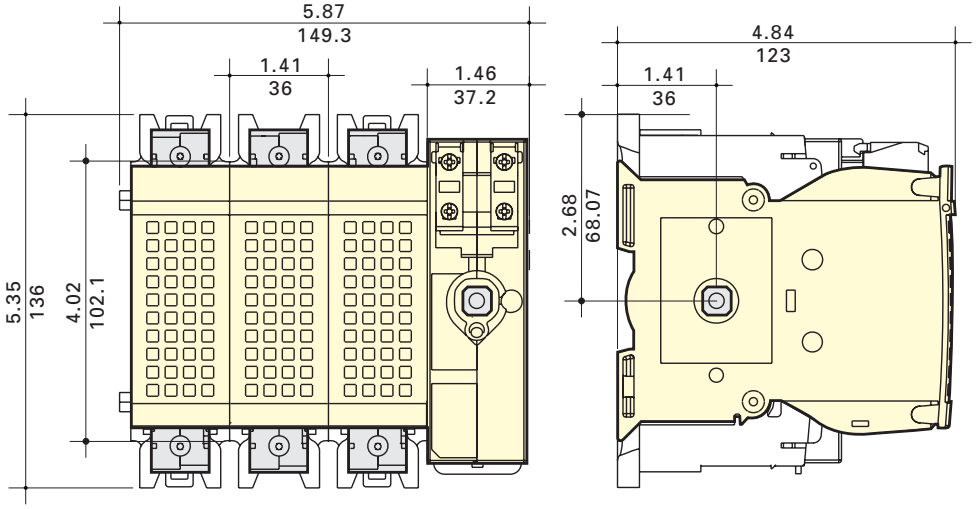


Direct mount handle

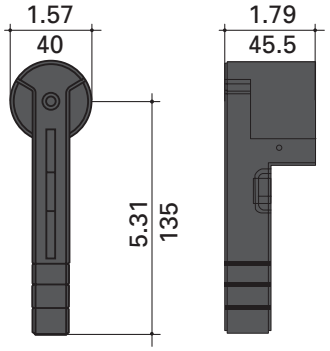


DIR-07

Flange handle

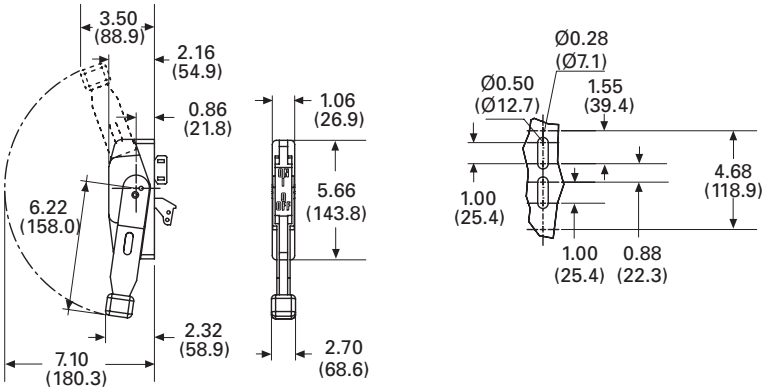


FLH_

External front and right side pistol handle

Handle type | Direction of front operation | Direction of right side operation | Door drilling layout

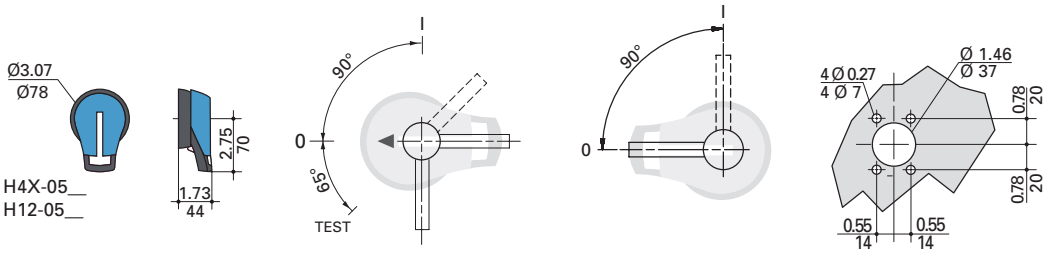

## Compact 60 amp Class J

**For a complete assembly, select:**

Select for standard applications

### Switch

**Switch**

| Amps | Fuse class | Poles | SCCR (kA) | Max horsepower rating: 1-phase 220/240 | 3-phase 220/240 | 3-phase 440/480 | 3-phase 600 | DC* 125 | DC* 250 | Conductor AWG size / type | Catalog no. |
|---|---|---|---|---|---|---|---|---|---|---|---|
| 60 | J | 2 | 100 | 10 | - | - | - | 5 | 10 | 14-10 Sol/14-6 Str 75°C Cu | RDF60J-2-COMP |
| | | 3 | | - | 15 | 30 | 50 | 5 | 10 | | RDF60J-3-COMP |
| | | 4 | | - | 15 | 30 | 50 | 5 | 10 | | RDF60J-4-COMP |

* DC ratings use two poles in series.

**PLUS**

### Handle

**Direct mount handle - mounts directly to switch, no shaft required**

| For switch cat. no. | Color | Test function | Padlockable | Catalog no. |
|---|---|---|---|---|
| All switches | Black | Y | Y - on switch | DIR-07 |

**OR**

**External front operated pistol handles - shaft required**

| NEMA type | Color | Test function | Padlockable | Defeatable | Catalog no. |
|---|---|---|---|---|---|
| 1, 3R, 12 | Black | N | Y | Y | H12-05B |
| 1, 3R, 12 | Red/yellow | | | | H12-05R |
| 1, 3R, 4, 4X, 12 | Black | | | | H4X-05B |
| 1, 3R, 4, 4X, 12 | Red/yellow | | | | H4X-05R |
| 1, 3R, 4, 4X, 12 | Black | Y | | | H4X-05TB |
| 1, 3R, 4, 4X, 12 | Red/yellow | | | | H4X-05TR |

Or

**Metallic hasp (heavy duty) external front operated pistol handles - shaft required**

| NEMA type | Color | Test function | Padlockable | Defeatable | Catalog no. |
|---|---|---|---|---|---|
| 1, 3R, 4, 4X, 12 | Black | N | Y | Y | H4X-05BHD |
| 1, 3R, 4, 4X, 12 | Red/yellow | | | | H4X-05RHD |

**External right side operated pistol handles - shaft required**

| NEMA type | Color | Test function | Padlockable | Defeatable | Catalog no. |
|---|---|---|---|---|---|
| 1, 3R, 4, 4X, 12 | Black | N | Y | N/A | H4X-05SB |
| 1, 3R, 4, 4X, 12 | Red/yellow | | | | H4X-05SR |

+

**Shafts for pistol handles**

| Length — in (mm) | Mounting depth (X) - in (mm) | Catalog no. |
|---|---|---|
| 7.9 (200) | 5.30~9.06 (135~230) | SH5-200 |
| 12.6 (320) | 5.30~13.78 (135~350) | SH5-320 |
| 15.7 (400) | 5.30~16.93 (135~430) | SH5-400 |

**OR**

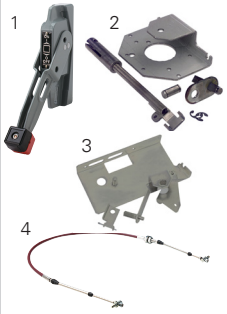


**Flange handle (1) - requires shaft operated mechanism or cable operated mechanism + cable**

| NEMA type | Flange style | Test function | Padlockable | Defeatable | Catalog no. |
|---|---|---|---|---|---|
| 1, 3R, 4, 12 | Standard | N | Y | Y | FLH1 |
| 1, 3R, 4, 4X, 12 | Chrome plated | | | | FLH2 |

**Shaft operated flange mechanism (2) - includes shaft**

| For enclosure depth - in (mm) | Catalog no. |
|---|---|
| 6~24 (152~613) | FLRM |

**Cable operated flange mechanism and cable - must select mechanism (3) and cable (4)**

| Item / length — in (mm) | Catalog no. |
|---|---|
| Cable mechanism | FLCM |
| 36 (900) cable | FLC36 |
| 60 (1500) cable | FLC60 |
| 120 (3000) cable | FLC120 |

**OR**

**NFPA through the door handle kit - to be used with selector handle or front pistol handle**

| Color | Test function | Padlockable | Defeatable | Catalog no. |
|---|---|---|---|---|
| Red | N | Y | N | H79-2 |

**AND...**

Accessories

### Aux. contacts

**Auxiliary contacts**

| Contact type | No. of contacts | Continuous amp rating | Voltage (Vac) | Max. aux contacts per switch | Catalog no. |
|---|---|---|---|---|---|
| NO | 1 | 10 | 600 | 4 | BAC05 |
| NC | | | | | BAC06 |

**Dimensions — in (mm)**

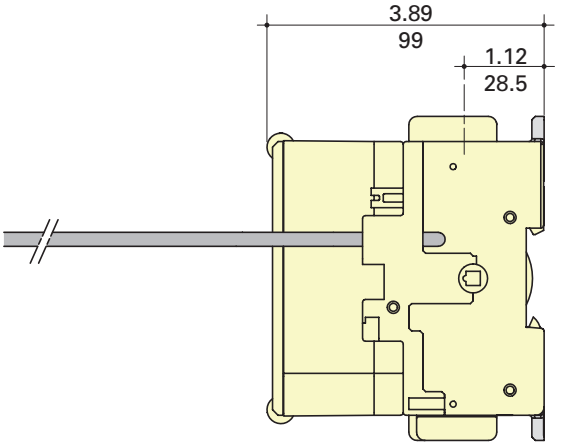


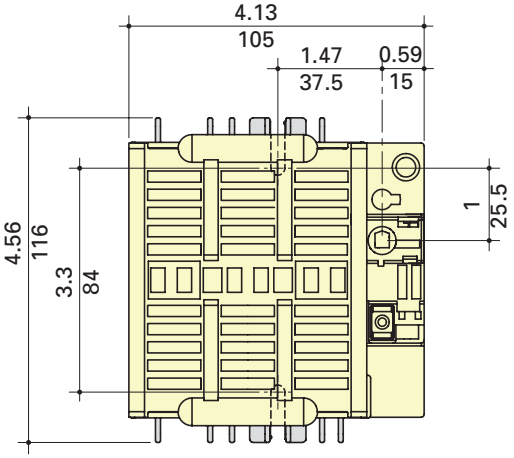


Direct mount handle

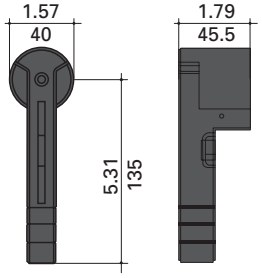


DIR-07

Flange handle

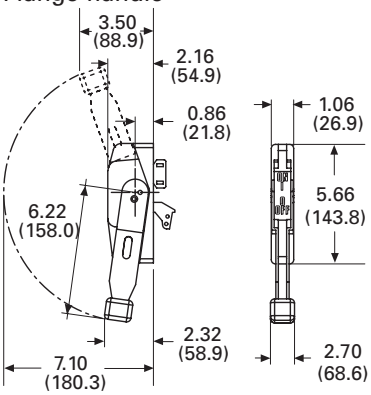


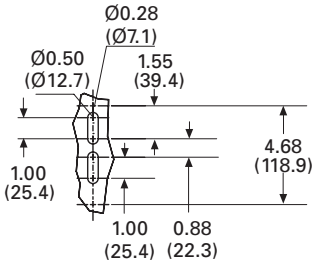


FLH_

External front and right side pistol handle

| Handle type | Direction of front operation | Direction of right side operation | Door drilling layout |
|---|---|---|---|

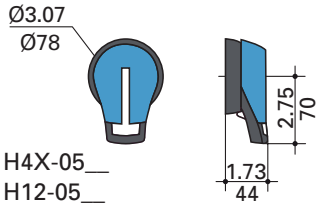


H4X-05__
H12-05__

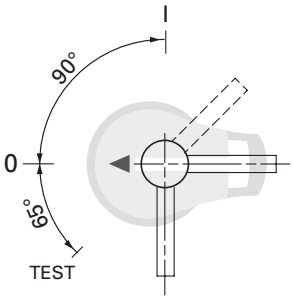


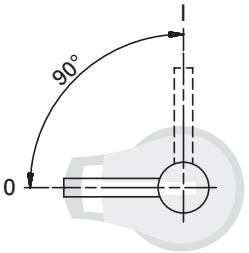


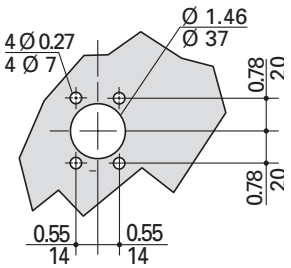

## Standard 60 amp Class J

**For a complete assembly, select:**

Select for standard applications

### Switch

**Switch**

| Amps | Fuse class | Poles | SCCR (kA) | Max horsepower rating: 1-phase 220/240 | 3-phase 220/240 | 3-phase 440/480 | 3-phase 600 | DC* 125 | DC* 250 | Conductor AWG size/type | Catalog no. |
|---|---|---|---|---|---|---|---|---|---|---|---|
| 60 | J | 2 | 200 | 10 | - | - | - | 5 | 10 | 12-10 Sol/12-1 Str 75°C Cu | RDF60J-2 |
| | | 3 | 200 | - | 15 | 30 | 50 | 5 | 10 | | RDF60J-3 |
| | | 4 | 200 | - | 15 | 30 | 50 | 5 | 10 | | RDF60J-4 |

* DC ratings use two poles in series.

**PLUS**

### Handle

**Direct mount handle - mounts directly to switch, no shaft required**

| For switch cat. no. | Color | Test function | Padlockable | Catalog no. |
|---|---|---|---|---|
| All switches | Black | Y | Y | DIR-07 |

**OR**

**External front operated pistol handles - shaft required**

| NEMA type | Color | Test function | Padlockable | Defeatable | Catalog no. |
|---|---|---|---|---|---|
| 1, 3R, 12 | Black | N | Y | Y | H12-03B |
| 1, 3R, 12 | Red/yellow | | | | H12-03R |
| 1, 3R, 4, 4X, 12 | Black | | | | H4X-06B |
| 1, 3R, 4, 4X, 12 | Red/yellow | | | | H4X-06R |
| 1, 3R, 4, 4X, 12 | Black | Y | | | H4X-06TB |
| 1, 3R, 4, 4X, 12 | Red/yellow | | | | H4X-06TR |

Or

**Metallic hasp (heavy duty) external front operated pistol handles - shaft required**

| NEMA type | Color | Test function | Padlockable | Defeatable | Catalog no. |
|---|---|---|---|---|---|
| 1, 3R, 4, 4X, 12 | Black | N | Y | Y | H4X-06BHD |
| 1, 3R, 4, 4X, 12 | Red/yellow | | | | H4X-06RHD |

**External right side operated pistol handles - shaft required**

| NEMA type | Color | Test function | Padlockable | Defeatable | Catalog no. |
|---|---|---|---|---|---|
| 1, 3R, 4, 4X, 12 | Black | N | Y | N/A | H4X-06SB |
| 1, 3R, 4, 4X, 12 | Red/yellow | | | | H4X-06SR |

+

**Shafts for pistol handles**

| Length — in (mm) | Mounting depth (X) — in (mm) | Catalog no. |
|---|---|---|
| 7.9 (200) | 5.30~9.06 (135~230) | SH5-200 |
| 12.6 (320) | 5.30~13.78 (135~350) | SH5-320 |
| 15.7 (400) | 5.30~16.93 (135~430) | SH5-400 |

**OR**

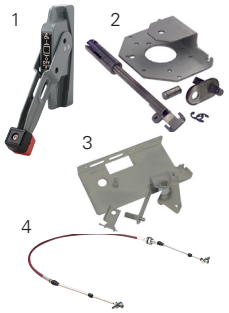


**Flange handle (1) - requires shaft operated mechanism or cable operated mechanism + cable**

| NEMA type | Flange style | Test Function | Padlockable | Defeatable | Catalog no. |
|---|---|---|---|---|---|
| 1, 3R, 4, 12 | Standard | N | Y | Y | FLH1 |
| 1, 3R, 4, 4X, 12 | Chrome plated | | | | FLH2 |

**Shaft operated flange mechanism (2) - includes shaft**

| For enclosure depth — in (mm) | Catalog no. |
|---|---|
| 6~24 (152~613) | FLRM |

**Cable operated flange mechanism and cable - must select mechanism (3) and cable (4)**

| Item / length — in (mm) | Catalog no. |
|---|---|
| Cable mechanism | FLCM |
| 36 (900) cable | FLC36 |
| 60 (1500) cable | FLC60 |
| 120 (3000) cable | FLC120 |

**OR**

**NFPA through the door handle kit - to be used with front pistol handle**

| Color | Test function | Padlockable | Defeatable | Catalog no. |
|---|---|---|---|---|
| Red | N | Y | N | H79-2 |

**AND...**

Accessories

### Aux. contacts

**Auxiliary contacts**

| Contact type | No. of contacts | Continuous amp rating | Voltage (Vac) | Max number of aux contacts per switch | Catalog no. |
|---|---|---|---|---|---|
| NO | 1 | 10 | 600 | 4 | BAC05 |
| NC | | | | | BAC06 |

**Dimensions — in (mm)**

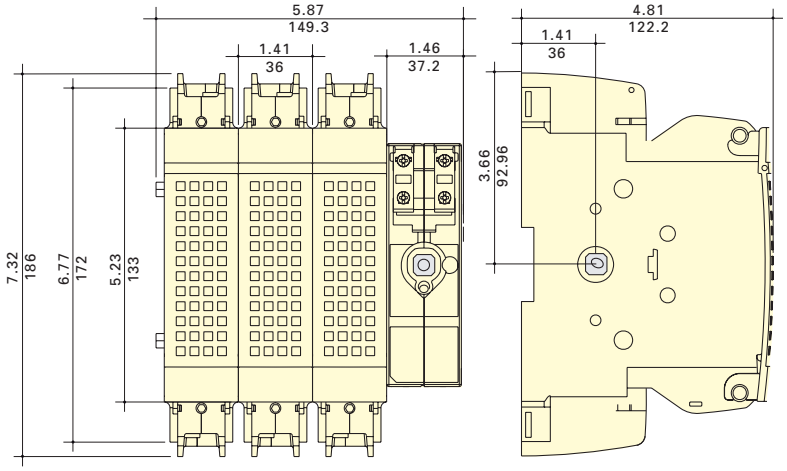


Direct mount handle

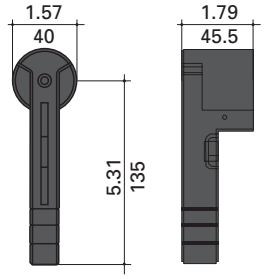


DIR-07

Flange handle

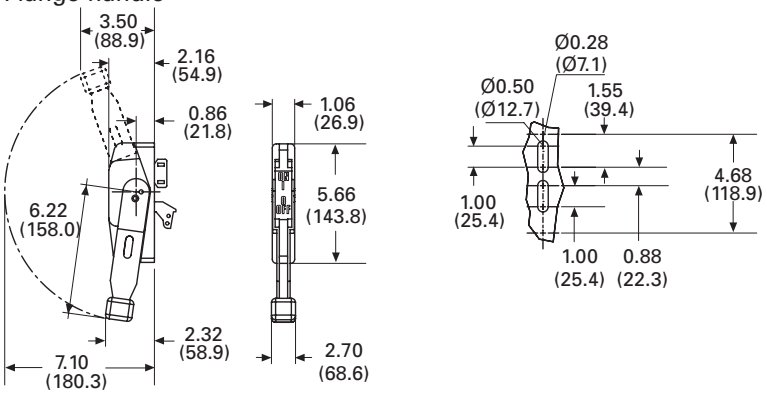


FLH_

External front and right side pistol handle

Handle type

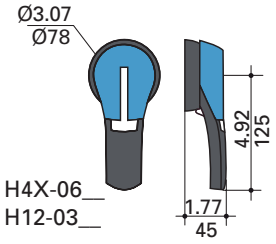


H4X-06__
H12-03__

Direction of front operation

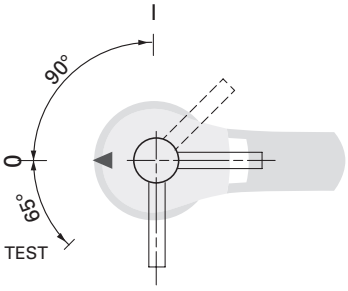


Direction of right side operation

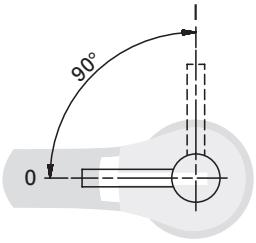


Door drilling layout

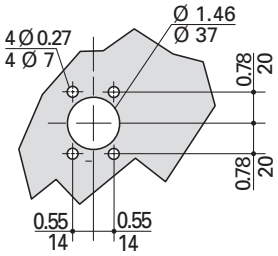

## Standard 100 amp Class J

**For a complete assembly, select:**

Select for standard applications

### Switch

**Switch**

| Amps | Fuse class | Poles | SCCR (kA) | Max horsepower rating: 1-phase 220/240 | 3-phase 220/240 | 3-phase 440/480 | 3-phase 600 | DC* 125 | DC* 250 | Conductor AWG size/type | Catalog no. |
|---|---|---|---|---|---|---|---|---|---|---|---|
| 100 | J | 2 | 200 | 10 | - | - | - | 7.5 | 20 | 12-10 Sol/12-1 Str 75°C Cu | RDF100J-2 |
| | | 3 | | - | 30 | 60 | 75 | 7.5 | 20 | | RDF100J-3 |
| | | 4 | | - | 30 | 60 | 75 | 7.5 | 20 | | RDF100J-4 |

* DC ratings use two poles in series.

**PLUS**

### Handles

**Direct mount handle - mounts directly to switch, no shaft required**

| For switch cat. no. | Color | Test function | Padlockable | Catalog no. |
|---|---|---|---|---|
| All switches | Black | Y | Y | DIR-07 |

**OR**

**External front operated pistol handles - shaft required**

| NEMA type | Color | Test function | Padlockable | Defeatable | Catalog no. |
|---|---|---|---|---|---|
| 1, 3R, 12 | Black | N | Y | Y | H12-03B |
| | Red/yellow | | | | H12-03R |
| 1, 3R, 4, 4X, 12 | Black | | | | H4X-06B |
| | Red/yellow | | | | H4X-06R |
| | Black | Y | | | H4X-06TB |
| | Red/yellow | | | | H4X-06TR |

Or

**Metallic hasp (heavy duty) external front operated pistol handles - shaft required**

| NEMA type | Color | Test function | Padlockable | Defeatable | Catalog no. |
|---|---|---|---|---|---|
| 1, 3R, 4, 4X, 12 | Black | N | Y | Y | H4X-06BHD |
| 1, 3R, 4, 4X, 12 | Red/yellow | | | | H4X-06RHD |

**External right side operated pistol handles - shaft required**

| NEMA type | Color | Test function | Padlockable | Defeatable | Catalog no. |
|---|---|---|---|---|---|
| 1, 3R, 4, 4X, 12 | Black | N | Y | N/A | H4X-06SB |
| | Red/yellow | | | | H4X-06SR |

+

**Shafts for pistol handles**

| Length — in (mm) | Mounting depth (X) - in (mm) | Catalog no. |
|---|---|---|
| 7.9 (200) | 5.30~9.06 (135~230) | SH5-200 |
| 12.6 (320) | 5.30~13.78 (135~350) | SH5-320 |
| 15.7 (400) | 5.30~16.93 (135~430) | SH5-400 |

**OR**

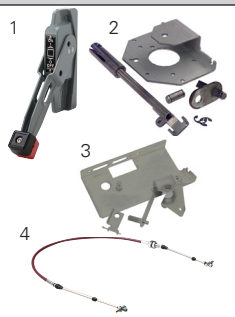


**Flange handle (1) - requires shaft operated mechanism or cable operated mechanism + cable**

| NEMA type | Flange style | Test function | Padlockable | Defeatable | Catalog no. |
|---|---|---|---|---|---|
| 1, 3R, 4, 12 | Standard | N | Y | Y | FLH1 |
| 1, 3R, 4, 4X, 12 | Chrome plated | | | | FLH2 |

**Shaft operated flange mechanism (2) - includes shaft**

| For enclosure depth — in (mm) | Catalog no. |
|---|---|
| 6~24 (152~613) | FLRM |

**Cable operated flange mechanism and cable - must select mechanism (3) and cable (4)**

| Item / length — in (mm) | Catalog no. |
|---|---|
| Cable mechanism | FLCM |
| 36 (900) cable | FLC36 |
| 60 (1500) cable | FLC60 |
| 120 (3000) cable | FLC120 |

**OR**

**NFPA through the door handle kit - to be used with front pistol handle**

| Color | Test function | Padlockable | Defeatable | Catalog no. |
|---|---|---|---|---|
| Red | N | Y | N | H79-2 |

AND...

### Accessories — Aux. contacts

**Auxiliary contacts**

| Contact type | No. of contacts | Continuous amp rating | Voltage (Vac) | Max number of aux contacts per switch | Catalog no. |
|---|---|---|---|---|---|
| NO | 1 | 10 | 600 | 4 | BAC05 |
| NC | | | | | BAC06 |

**Dimensions — in (mm)**

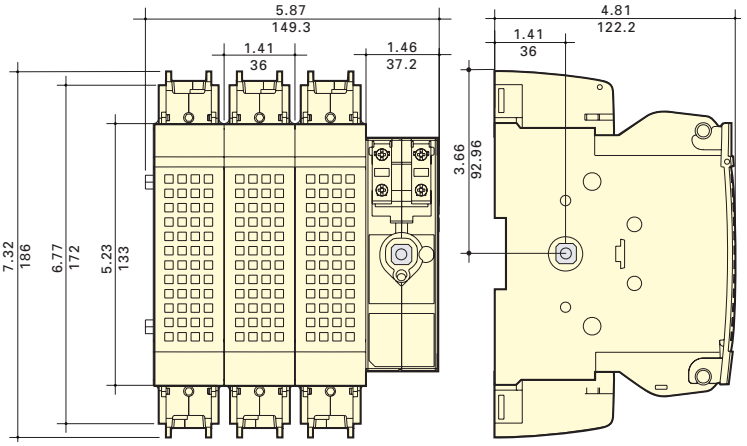


Direct mount handle

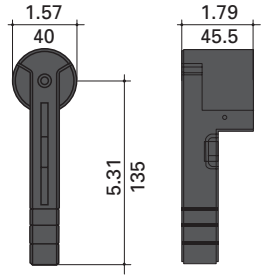


DIR-07

Flange handle

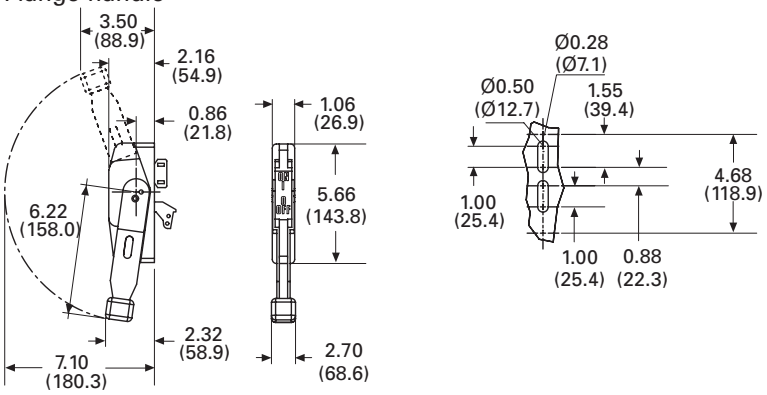


FLH_

External front and right side pistol handle

Handle type

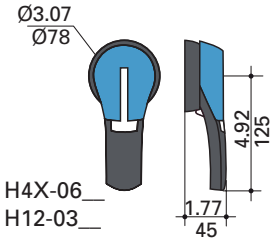


H4X-06__
H12-03__

Direction of front operation

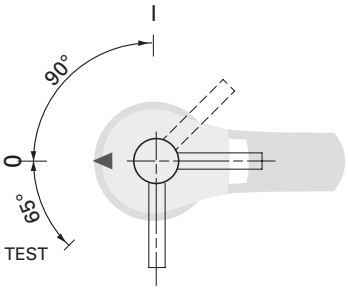


Direction of right side operation

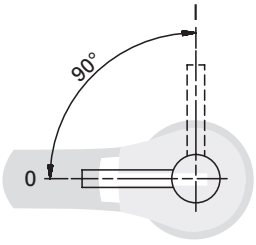


Door drilling layout

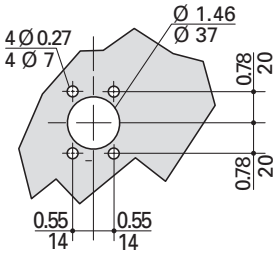

## Standard 200 and 400 amp Class J

**For a complete assembly, select:**

Select for standard applications

### Switch + lugs

+

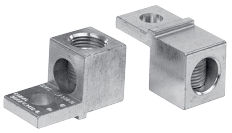

**Switch**

| Amps | Fuse class | Poles | SCCR (kA) | Max horsepower rating: 1-phase 220/240 | 3-phase 220/240 | 3-phase 440/480 | 3-phase 600 | DC* 125 | DC* 250 | Catalog no. |
|---|---|---|---|---|---|---|---|---|---|---|
| 200 | J | 2 | 200 | 10 | - | - | - | - | - | RDF200J-2 |
| | | 3 | | - | 60 | 125 | 150 | - | - | RDF200J-3 |
| | | 4 | | - | 60 | 125 | 150 | - | - | RDF200J-4 |
| 400 | | 2 | | 10 | - | - | - | 20 | 50 | RDF400J-2 |
| | | 3 | | - | 125 | 250 | 350 | 20 | 50 | RDF400J-3 |
| | | 4 | | - | 125 | 250 | 350 | 20 | 50 | RDF400J-4 |

* DC ratings use two poles in series.

**Terminal lug kit**

| Switch amps | Poles | Lugs per kit | AWG wire / type | Catalog no. |
|---|---|---|---|---|
| 200 | 2 | 2 | 6-300 kcmil 75°C Cu/Al | LUG1-2 |
| | 3 | 3 | | LUG1-3 |
| | 4 | 4 | | LUG1-4 |
| 400 | 2 | 2 | 4-600 kcmil or dual 1/0-250 kcmil 75°C Cu/Al | LUG2-2 |
| | 3 | 3 | | LUG2-3 |
| | 4 | 4 | | LUG2-4 |

**PLUS**

### Handles

**Direct mount handle - mounts directly to switch, no shaft required**

| For switch cat. no. | Color | Test function | Padlockable | Catalog no. |
|---|---|---|---|---|
| All switches | Black | Y | Y | DIR-07 |

**OR**

**External front operated pistol handles - shaft required**

| NEMA type | Color | Test function | Padlockable | Defeatable | Catalog no. |
|---|---|---|---|---|---|
| 1, 3R, 12 | Black | N | Y | Y | H12-03B |
| | Red/yellow | | | | H12-03R |
| 1, 3R, 4, 4X, 12 | Black | | | | H4X-06B |
| | Red/yellow | | | | H4X-06R |
| | Black | Y | | | H4X-06TB |
| | Red/yellow | | | | H4X-06TR |

Or

**Metallic hasp (heavy duty) external front operated pistol handles - shaft required**

| NEMA type | Color | Test function | Padlockable | Defeatable | Catalog no. |
|---|---|---|---|---|---|
| 1, 3R, 4, 4X, 12 | Black | N | Y | Y | H4X-06BHD |
| | Red/yellow | | | | H4X-06RHD |

**External right side operated pistol handles - shaft required**

| NEMA type | Color | Test function | Padlockable | Defeatable | Catalog no. |
|---|---|---|---|---|---|
| 1, 3R, 4, 4X, 12 | Black | N | Y | N/A | H4X-06SB |
| | Red/yellow | | | | H4X-06SR |

+

**Shafts for pistol handles**

| Length — in (mm) | Mounting depth (X) — in (mm) | Catalog no. |
|---|---|---|
| 7.9 (200) | 200 A: 5.70-9.06 (145-230)<br>400 A: 7.87-10.24 (200-260) | SH5-200 |
| 12.6 (320) | 200 A: 5.70-13.78 (145-350)<br>400 A: 7.87-16.93 (200-380) | SH5-320 |
| 15.7 (400) | 200 A: 5.70-16.93 (145-430)<br>400 A: 7.87-18.10 (200-460) | SH5-400 |

**OR**

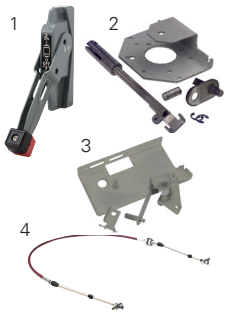


**Flange handle (1) 200 A only - requires shaft operated mechanism or cable operated mechanism + cable**

| NEMA type | Flange style | Test function | Padlockable | Defeatable | Catalog no. |
|---|---|---|---|---|---|
| 1, 3R, 4, 12 | Standard | N | Y | Y | FLH1 |
| 1, 3R, 4, 4X, 12 | Chrome plated | | | | FLH2 |

**Shaft operated flange mechanism (2) 200 A only - includes shaft**

| For enclosure depth — in (mm) | Catalog no. |
|---|---|
| 6~24 (152~613) | FLRM |

**Cable operated flange mechanism and cable 200 A only - must select Mechanism (3) and Cable (4)**

| Item — in (mm) | Catalog no. |
|---|---|
| Cable mechanism | FLCM |
| 36 (900) cable | FLC36 |
| 60 (1500) cable | FLC60 |
| 120 (3000) cable | FLC120 |

**OR**

**NFPA through the door handle kit - to be used with front pistol handle**

| Use with switch | Color | Test function | Padlockable | Defeatable | Catalog no. |
|---|---|---|---|---|---|
| RDF200J-_ | Red | N | Y | N | H79-2 |
| RDF400J-_ | | | | | H79-3 |

**AND...**

Accessories — Aux. contacts

**Auxiliary contacts**

| Contact type | No. of contacts | Continuous amp rating | Voltage (Vac) | Max number of aux contacts per switch catalog number | Catalog no. |
|---|---|---|---|---|---|
| NO | 1 | 10 | 600 | RDF200J-__: 4 | BAC05 |
| NC | | | | RDF400J-__: 8 | BAC06 |

**AND...**

Accessories — Shrouds

**Terminal shrouds - includes terminal shroud for lineside or loadside**

| Switch amps | Poles | Catalog no. |
|---|---|---|
| 200 | 2 | TSH8-2TB |
| | 3 | TSH8-3TB |
| | 4 | TSH8-4TB |
| 400 | 2 | TSH9-2TB |
| | 3 | TSH9-3TB |
| | 4 | TSH9-4TB |



## Dimensions — in (mm)

RDF200J-3

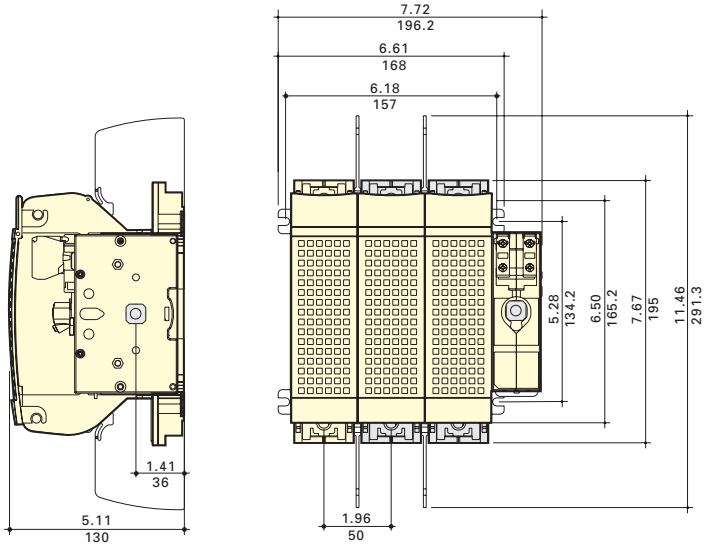


RDF400J-3

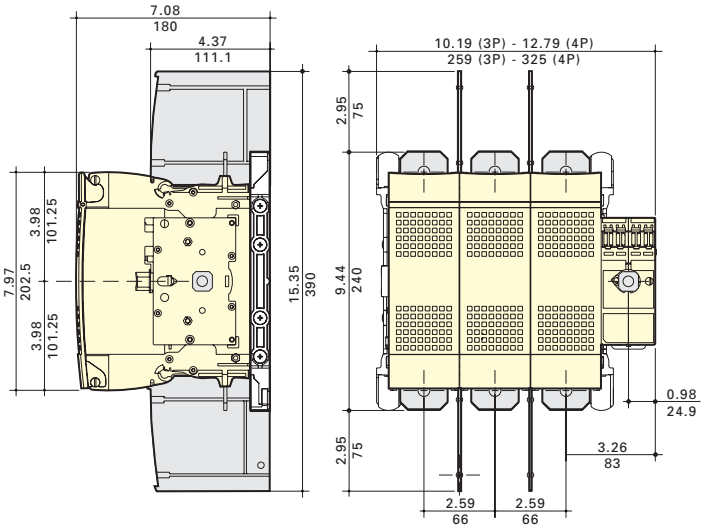

**Dimensions — in (mm)**

DIR-07 direct mount handle

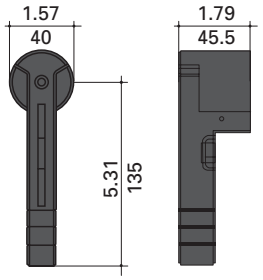


FLH_ flange handle

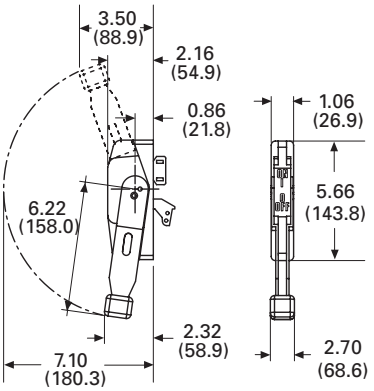


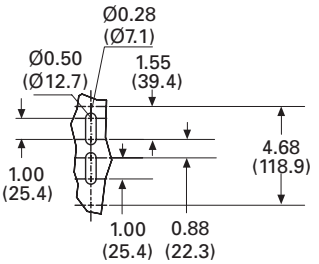


External front and right side pistol handle

Handle type

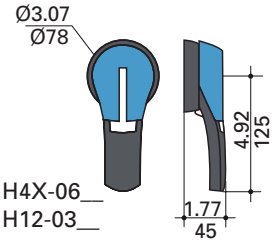


Direction of front operation

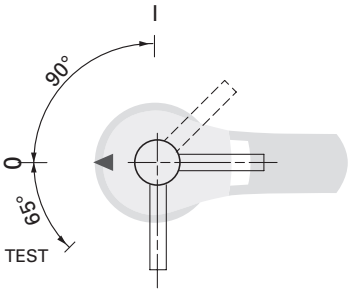


Direction of right side operation

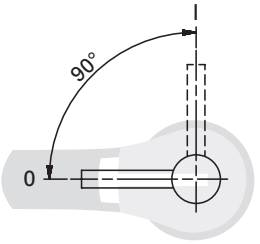


Door drilling layout

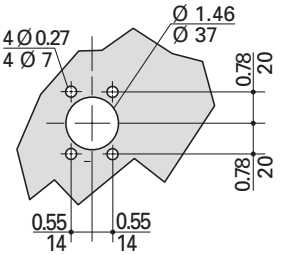


Terminal lugs

200 A (LUG1-__)

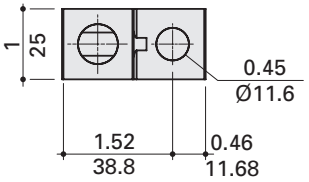


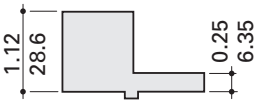


400 A (LUG2-__)

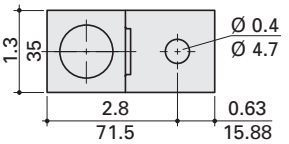


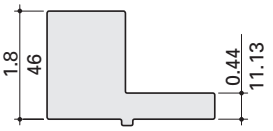

## Standard 600 amp Class J and 800 amp Class L

**For a complete assembly, select:**

Select for standard application

### Switch + lugs

+

**Switch**

| Amps | Fuse class | Poles | SCCR (kA) | Max horsepower rating, 3-phase 220/240 | 440/480 | 600 | Catalog no. |
|---|---|---|---|---|---|---|---|
| 600 | J | 2 | 200 | - | - | - | RDF600J-2 |
| | | 3 | | 200 | 400 | 500 | RDF600J-3 |
| | | 4 | | 200 | 400 | 500 | RDF600J-4 |
| 800 | L | 2 | | - | - | - | RDF800L-2 |
| | | 3 | | 200 | 500 | 500 | RDF800L-3 |
| | | 4 | | 200 | 500 | 500 | RDF800L-4 |

**Terminal lug kit**

| Switch amps | Poles | Lugs per kit | Conductor AWG size / type | Catalog no. |
|---|---|---|---|---|
| 600-800 | 2 | 2 | (2) 2-600 kcmil 75°C Cu/ Al | LUG5-2 |
| | 3 | 3 | | LUG5-3 |
| | 4 | 4 | | LUG5-4 |

**PLUS**

### Handles

**Direct mount handle - mounts directly to switch, no shaft required**

| For switch cat. no. | Color | Test function | Padlockable | Defeatable | Catalog no. |
|---|---|---|---|---|---|
| All switches | Black | Y | Y | N | DIR-08 |

**OR**

Or

**External front operated pistol handles - shaft required**

| NEMA type | Color | Test function | Padlockable | Defeatable | Catalog no. |
|---|---|---|---|---|---|
| 1, 3R, 4, 4X, 12 | Black | N | Y | Y | H4X-07B |
| | Red/yellow | | | | H4X-07R |

**Metallic hasp (heavy duty) external front operated pistol handles - shaft required**

| NEMA type | Color | Test function | Padlockable | Defeatable | Catalog no. |
|---|---|---|---|---|---|
| 1, 3R, 4, 4X, 12 | Black | N | Y | Y | H4X-07BHD |
| | Red/yellow | | | | H4X-07RHD |

+

**Shafts for pistol handles**

| Length — in (mm) | Mounting depth (X) — in (mm) | Catalog no. |
|---|---|---|
| 7.9 (200) | 10.63~11.97 (270~304) | SH7-200 |
| 12.6 (320) | 10.63~16.69 (270~424) | SH7-320 |
| 15.7 (400) | 10.63~19.84 (270~504) | SH7-400 |

**OR**

**NFPA through the door handle kit - to be used with front pistol handle**

| For switch cat. no. | Color | Test function | Padlockable | Defeatable | Catalog no. |
|---|---|---|---|---|---|
| All switches | Red | N | Y | N | H79-4 |

**AND...**

Accessories

### Aux. contacts

**Auxiliary contacts**

| Contact type | No. of contacts | Continuous amp rating | Voltage (Vac) | Max number of aux contacts per switch | Catalog no. |
|---|---|---|---|---|---|
| NO | 1 | 10 | 600 | 8 | BAC05 |
| NC | | | | | BAC06 |

**AND...**

### Shrouds

**Terminal shrouds - includes terminal shroud for lineside or loadside**

| Switch amps | Poles | Catalog no. |
|---|---|---|
| 600-800 | 2 | TSH10-2TB |
| | 3 | TSH10-3TB |
| | 4 | TSH10-4TB |

**Dimensions — in (mm)**

RDF600J-3 and RDF800L-3

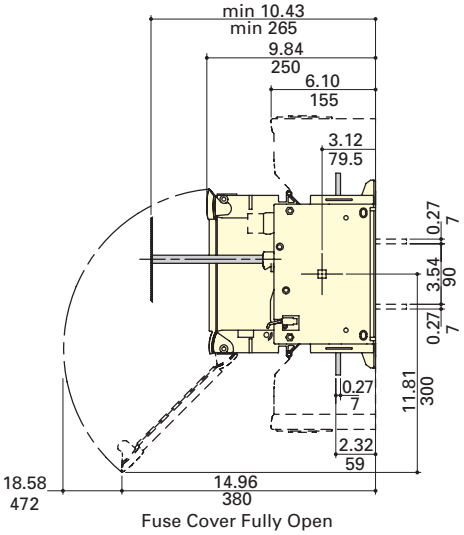


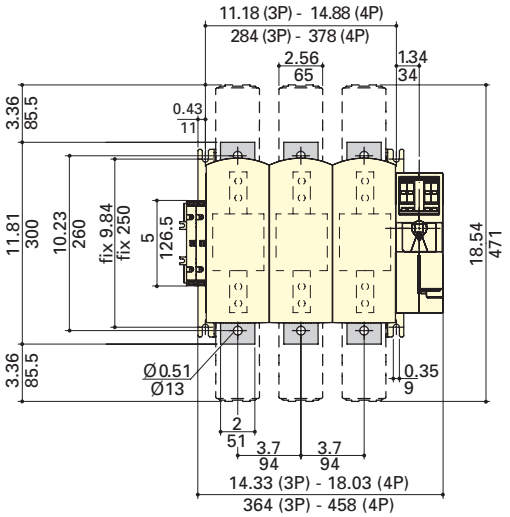


Dir-08 drect mount handle

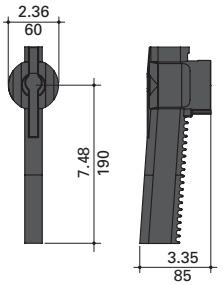


External front pistol handle

Handle type

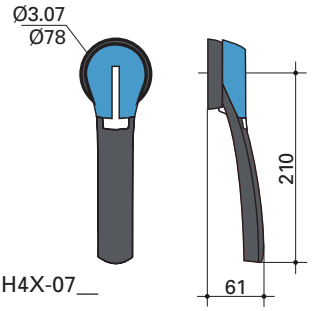


H4X-07__

Direction of front operation

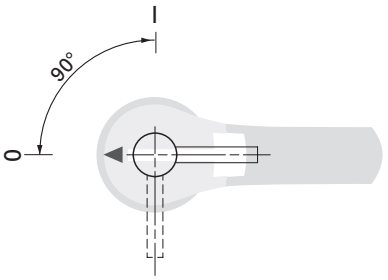


Door drilling layout

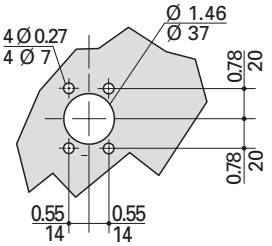


Terminal lugs

600 to 800 A (LUG5-__)

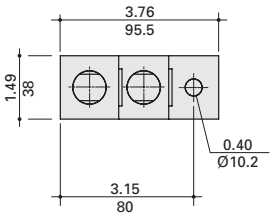


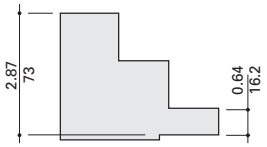

# UL 98 non-fused rotary disconnect switches — 30 to 1200 amps

Bussmann series UL 98 non-fused rotary disconnect switches are versatile switches that "break" and "make" power circuits ON and OFF load.

## Agency information

- UL 98, Guide WHTY, File E155130
- CSA 22.2 No. 4, File 257020
- Conforms with IEC 60947-3

## Features

- Make and break power under load
- Up to 200 kA SCCR
- Panel mount (30-100 A compact DIN-Rail or panel mount)
- Disconnect switches are front, right side and direct handle operable (30-100 A)
- Finger-safe (30-100 A compact only)
- Fully visualized breaking (100-1200 A)

## Online resources

Visit Eaton.com/bussmannseries for:

- CAD drawings
- Instruction sheets
- UL information

## Related Bussmann series products

| Fuse blocks |
|---|
| Modular Class H(K), J and RK fuse blocks up to 600 A |
| Modular Class H(K), J and RK power distribution fuse blocks up to 400 A |
| Modular, finger-safe CH Class CC and J, and UL supplemental and IEC 10x38mm DIN-Rail holders up to 60 A |
| Finger-safe Optima Class CC, UL supplemental and IEC 10x38mm DIN-Rail/panel mount holders up to 30 A |
| Finger-safe Optima™ Class CC, UL supplemental and IEC 10x38mm DIN-Rail/panel mount protection modules up to 30 A |

RD30-3

RD200-3

RD600-3

## IEC specifications

| | | Catalog no. | | | | | | | | | |
|---|---|---|---|---|---|---|---|---|---|---|---|
| **3-pole** | | **RD30-3** | **RD60-3** | **RD100-3** | **RD100-3-SCCR** | **RD200-3** | **RD400-3** | **RD600-3** | **RD800-3** | **RD1000-3** | **RD1200-3** |
| **4-pole** | | **—** | **—** | **—** | **—** | **RD200-4** | **RD400-4** | **RD600-4** | **RD800-4** | **RD1000-4** | **RD1200-4** |
| Thermal current $I_{th}$ @ 40°C (A) | | 30 | 60 | 100 | 100 | 200 | 400 | — | — | — | — |
| Rated insulation voltage $U_i$ (V) | | 800 | 800 | 800 | 1000 | 1000 | 1000 | 1000 | 1000 | 1000 | 1000 |
| Rated impulse withstand voltage $U_{imp}$ (kV) | | 8 | 8 | 8 | 8 | 8 | 8 | 12 | 12 | 12 | 12 |
| **Rated operation currents $I_e$ (A)** | | | | | | | | | | | |
| Rated voltage (Vac) | Load duty category | A [1] | A [1] | A [1] | A [1] | A [1] | A [1] | A [1] | A [1] | A [1] | A [1] |
| 400 | AC-22 A | 32 | 63 | 100 | 100 | 200 | 400 | 630 | 800 | 1000 | 1200 |
| | AC-23 A | | | | | | | | | | 1000 |
| 690 | AC-22 A | | | 80 | | | | 500 | 630 | 630 | 630 |
| | AC-23 A | | | 63 | | | 315 | 200 | 400 | 400 | 400 |
| **Operational power (Vac) in AC-23 (kW)** | | | | | | | | | | | |
| 400 V w/o prebreak AC [1, 2] | | 15 | 30 | 45 | 51 | 100 | 220 | 355 | 450 | 560 | 560 |
| 500 V w/o prebreak AC [1, 2] | | | | | 63 | 140 | 280 | 450 | 560 | | |
| 690 V w/o prebreak AC [1, 2] | | 18.5 | | | 90 | 185 | 185 | 185 | 400 | 400 | 400 |
| **Overload capacity ($U_e$ 415 Vac)** | | | | | | | | | | | |
| Rated short-circuit making capacity $I_{cm}$ (kA peak) [3] | | 12 | 12 | 12 | 17.6 | 32 | 48 | 48 | 75 | 48 | 75 |
| **Fuse protected short-circuit withstand** | | | | | | | | | | | |
| (kA RMS prospective) | | | | | | | | | | | |
| Short-circuit current (kA) [3] | | 50 | 50 | 25 | 200 | 200 | 200 | 100 | 100 | 100 | 100 |
| Associated fuse rating (A) [3] | | 32 | 63 | 100 | 100 | | 400 | 630 | 800 | 1000 | 1250 |
| **Connection** | | | | | | | | | | | |
| Minimum Cu cable cross section (mm²) | | 2.5 | 2.5 | 10 | 35 | 70 | 185 | 2x150 | 2x185 | 2x240 | — |
| Minimum Cu busbar section (mm²) | | — | — | — | — | — | — | 2x30x5 | 2x40x5 | 2x50x5 | 2x60x5 |
| Maximum Cu cable section (mm²) | | 70 | 70 | 70 | 300 | 300 | 600 | — | — | — | — |

1 A/B: Category with index A = frequent operation; category with index B = infrequent operation.
2 The power value is given for information only; the current values vary from one manufacturer to another.
3 For a rated operating voltage, Ue = 400 Vac.

UL specifications

RD30-3 | RD200-3 | RD600-3

| | | Catalog no. | | | | | | | | | |
|---|---|---|---|---|---|---|---|---|---|---|---|
| **3-pole** | | **RD30-3** | **RD60-3** | **RD100-3** | **RD100-3-SCCR** | **RD200-3** | **RD400-3** | **RD600-3** | **RD800-3** | **RD1000-3** | **RD1200-3** |
| **4-pole** | | **—** | **—** | **—** | **—** | **RD200-4** | **RD400-4** | **RD600-4** | **RD800-4** | **RD1000-4** | **RD1200-4** |
| UL standard | | UL 98 | UL 98 | UL 98 | UL 98 | UL 98 | UL 98 | UL 98 | UL 98 | UL 98 | UL 98 |
| Max ampacity | | 30 A | 60 A | 100 A | 100 A | 200 A | 400 A | 600 A | 800 A | 1000 A | 1200 A |
| Switch type | | Compact | Compact | Compact | Standard | Standard | Standard | Standard | Standard | Standard | Standard |
| Handle operation | | Front/Side | Front/Side | Front/Side | Front | Front | Front | Front | Front | Front | Front |
| **UL electrical ratings** | | | | | | | | | | | |
| Max voltage (AC) | | 600 Vac | 600 Vac | 600 Vac | 600 Vac | 600 Vac | 600 Vac | 600 Vac | 600 Vac | 600 Vac | 600 Vac |
| Max voltage (DC) | | — | — | — | 250 Vdc | 250 Vdc | — | 250 Vdc | — | — | — |
| Max. AC Hp ratings | 1-phase, 120 | 2 | 3 | 5 | — | — | — | — | — | — | — |
| | 1-phase, 240 | 5 | 10 | 10 | 10 | 10 | — | — | — | — | — |
| | 3-phase, 240 | 10 | 20 | 20 | 30 | 75 | 125 | 200 | 200 | 200 | 200 |
| | 3-phase, 480 | 20 | 40 | 50 | 75 | 150 | 250 | 400 | 500 | 500 | 500 |
| | 3-phase, 600 | 25 | 50 | 50 | 100 | 200 | 350 | 350 | 500 | 500 | 500 |
| DC Hp ratings | 125 | — | — | — | — | — | — | 20 | — | — | — |
| | 250 | — | — | — | — | — | — | 50 | — | — | — |
| **Electrical characteristics** | | | | | | | | | | | |
| SCCR with fuse (kA) | | 100 | 100 | 25 /100* | 200 | 200 | 200 | 200 | 100 | 100 | 100 |
| Fuse class | | J | J | J | J | J | J | J | L | L | L |
| Max. fuse rating (A) | | 30 | 60 | 100 | 10A | 200 | 400 | 600 | 800 | 1000 | 1200 |
| Terminal lugs/kits | | Integral | Integral | Integral | • | • | • | • | • | • | • |
| Lug mounting torque - lb-in (N•m) | | — | — | — | 160 (18) | 160 (18) | LUG2-_ 310 (35)<br>LUG3-_ 398 (45) | 310 (35) | 310 (35) | 310 (35) | 310 (35) |
| Wire type | | 75°C Cu | 75°C Cu | 75°C Cu | 75°C Cu/ Al | 75°C Cu/ Al | 75°C Cu/ Al | 75°C Cu/ Al | 75°C Cu/ Al | 75°C Cu/ Al | 75°C Cu/ Al |
| Wire range and torque - lb-in (N•m) | Solid | 12-10, 35.4 (4) | 12-10, 35.4 (4) | 12-10, 35.4 (4) | — | — | — | — | — | — | — |
| | Stranded | 10-1, 35.4 (4) | 10-1, 35.4 (4) | 10-1, 35.4 (4) | 6-300 kcmil, 275 (31) | 6-300 kcmil, 275 (31) | LUG2-_ 4-600 kcmil, 550 (62) | (2) 2-600 kcmil, 375 (42.4) | (4) 2-600 kcmil, 375 (42.4) | (4) 2-600 kcmil, 375 (42.4) | (4) 2-600 kcmil, 375 (42.4) |
| | | 1/0, 39.8 (4.5) | 1/0, 39.8 (4.5) | 1/0, 39.8 (4.5) | | | Dual 1/0-250 kcmil, 550 (62) | | | | |
| | | 2/0, 44.3 (5) | 2/0, 44.3 (5) | 2/0, 44.3 (5) | | | LUG3-_: (2) 6-2, 200 (22.6) | | | | |
| | | | | | | | (2) 1-350 kcmil, 375 (42.4) | | | | |
| **Mechanical characteristics** | | | | | | | | | | | |
| Endurances/Cycles | | 10,000 | 10,000 | 10,000 | 10,000 | 8000 | 6000 | 6000 | 3500 | 3500 | 3500 |
| **Physical characteristics** | | | | | | | | | | | |
| Dimensions | | See drawings on product pages | | | | | | | | | |
| Weight - lbs (kg) | 3-pole | 1.3 (0.6) | 1.3 (0.6) | 1.3 (0.6) | 4.2 (1.91) | 4.2 (1.91) | 10.0 (4.6) | 18.1 (8.2) | 19.6 (8.9) | 19.6 (8.9) | 19.6 (8.9) |
| | 4-pole | — | — | — | — | 5.0 (2.3) | 12.3 (5.6) | 23.9 (10.9) | 25.3 (11.5) | 25.3 (11.5) | 25.3 (11.5) |
| **Environmental** | | | | | | | | | | | |
| Operating Temperature | | -20 to 70°C | -20 to 70°C | -20 to 70°C | -20 to 70°C | -20 to 70°C | -20 to 70°C | -20 to 70°C | -20 to 70°C | -20 to 70°C | -20 to 70°C |
| Flammability Rating | | UL 94-V0 | UL 94-V0 | UL 94-V0 | UL 94-V0 | UL 94-V0 | UL 94-V0 | UL 94-V0 | UL 94-V0 | UL 94-V0 | UL 94-V0 |
| **Accessories** | | | | | | | | | | | |
| Lug kit cat. no. | 3-pole | Integral | Integral | Integral | • | • | • | • | • | • | • |
| | 4-pole | — | — | — | — | • | • | • | • | • | • |
| Handles | NEMA 1, 3R, 12 | • | • | • | • | • | • | — | — | — | — |
| | NEMA 1, 3R, 4, 4X, 12 | • | • | • | • | • | • | • | • | • | • |
| | Direct | • | • | • | • | • | • | • | • | • | • |
| | Front Pistol | • | • | • | • | • | • | • | • | • | • |
| | Front or Side Selector | • | • | • | — | — | — | — | — | — | — |
| Shaft c/s - mm | | 5x5 | 5x5 | 5x5 | 10x10 | 10x10 | 10x10 | 12x12 | 12x12 | 12x12 | 12x12 |
| Shaft guide | | • | • | • | • | • | • | • | • | •• | • |
| Shrouds | | • | • | • | • | • | • | • | • | • | • |
| Additional pole accessory | | • | • | • | — | — | — | — | — | — | — |
| Auxiliary contacts | NO + NC | • | • | • | • | • | • | • | • | • | • |
| | (2) NO | • | • | • | — | — | — | — | — | — | — |

• Available, see product page for details and catalog numbers.
— Not available.
* 25 kA @ 600 Vac, 100 kA @ 480 Vac.

# UL 98 non-fused rotary disconnect switches — 30, 60 and compact 100 A

**For a complete assembly, select:**

Select for standard application

## Switch

| Amps | Poles | SCCR (kA) | Max horsepower rating 1-phase 120 | 1-phase 220/240 | 3-phase 220/240 | 3-phase 440/480 | 3-phase 600 | Conductor AWG size/type | Catalog no. |
|---|---|---|---|---|---|---|---|---|---|
| 30 | 3 | 100 | 2 | 5 | 10 | 20 | 25 | 10-2/0 Str/12-10 Sol 75°C Cu | RD30-3 |
| 60 | | | 3 | 10 | 20 | 40 | 50 | | RD60-3 |
| 100 | | 25/100* | 5 | 10 | 20 | 50 | 50 | | RD100-3 |

* 100 kA @480 Vac, 25 kA @ 600 Vac.

**PLUS**

## Handles

**Direct mount handle - mounts directly to switch, no shaft required**

| For switch cat. no. | Color | Test function | Padlockable | Catalog no. |
|---|---|---|---|---|
| All switches | Black | N | Y - On Switch | DIR-02 |

**OR**

1 2

**External front or right side operated selector handles - shaft required**

| NEMA type | Color | Handle length | Test function | Padlockable | Catalog no. |
|---|---|---|---|---|---|
| 1, 3R, 4, 4X, 12 | Black | Short | N | Y | H4X-01B (1) |
| | Red/yellow | Short | | | H4X-01R (1) |
| | Black | Long | | | H4X-02B (2) |
| | Red/yellow | Long | | | H4X-02R (2) |

**Or**

**External front operated pistol handles - shaft required**

| NEMA type | Color | Handle length | Test function | Padlockable | Defeatable | Catalog no. |
|---|---|---|---|---|---|---|
| 1, 3R, 4, 4X, 12 | Black | — | N | Y | Y | H4X-03B |
| | Red/yellow | — | | | | H4X-03R |

**Metallic hasp (heavy duty) external front operated pistol handles - shaft required**

| NEMA type | Color | Handle length | Test function | Padlockable | Defeatable | Catalog no. |
|---|---|---|---|---|---|---|
| 1, 3R, 4, 4X, 12 | Black | — | N | Y | Y | H4X-03BHD |
| | Red/yellow | — | | | | H4X-03RHD |

\+

1

**Shafts for selector handles**

| Length — in (mm) | Mounting depth (X) — in (mm) | Catalog no. |
|---|---|---|
| 5.9 (150) | 3.50~7.60 (89~193) | SH4-150 (1) |
| 7.9 (200) | 3.50~9.50 (89~241) | SH4-200 (1) |
| 12.6 (320) | 3.50~14.9 (89~378) | SH4-320 (1) |

2

**Shafts for pistol handles**

| Length — in (mm) | Mounting depth (X) - in (mm) | Catalog no. |
|---|---|---|
| 7.9 (200) | 3.30~7.40 (84~188) | SH3-200 (2) |
| 12.6 (320) | 3.30~9.30 (84~236) | SH3-320 (2) |
| 15.7 (400) | 3.30~14.7 (84~373) | SH3-400 (2) |

\+

**Shaft guide for selector handles**

| | Catalog no. |
|---|---|
| Required for 12.6" (320mm) long shafts, optional for other lengths | SH-GUIDE1 |

**Shaft guide for pistol handles**

| | Catalog no. |
|---|---|
| Required for 15.7î (400mm) long shafts, optional for other lengths | SH-GUIDE2 |

**AND...**

Accessories

## Aux. contacts

**Auxiliary contacts**

| Contact type | No. of contacts | Continuous amp rating | Voltage (Vac) | Max number of units per switch | Catalog no. |
|---|---|---|---|---|---|
| NO + NC | 1 of each | 10 | 240 | 2 (1 per side/4 contacts total) | BAC01 |
| NO | 2 | | | 2 (1 per side/4 contacts total) | BAC02 |

**AND...**

## Shrouds

**Terminal shrouds - includes terminal shroud for both lineside and loadside**

| Switch amps | Poles | Location on switch | Catalog no. |
|---|---|---|---|
| All switch-es | 1 (for switched 4th pole) | Lineside and loadside | TSH3-1TB |
| | 3 | | TSH3-3TB |

**AND...**

## Sw. 4th pole

**Switched 4th Pole - converts 3-pole switch to 4-pole**

| Switch amps | Catalog no. |
|---|---|
| 30 | POLE98-30 |
| 60 | POLE98-60 |
| 100 | POLE98-100 |

Auxiliary contact configurations

Possible 4th pole configurations

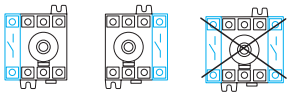

## Dimensions - in (mm)

### Direct handle operation

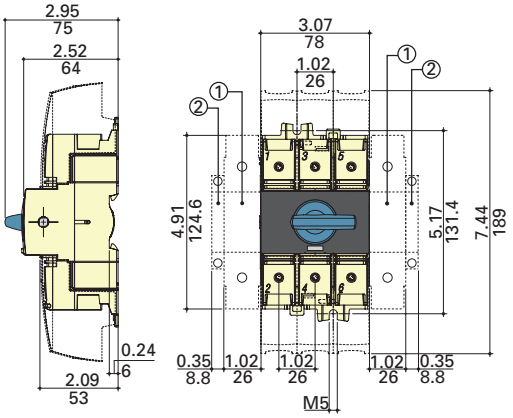


### External front operation

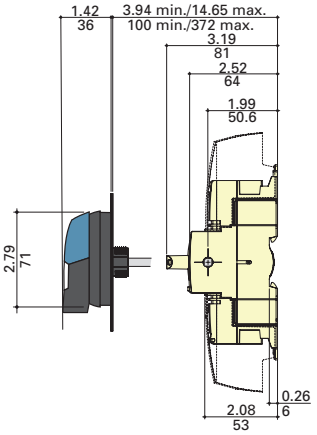


### External right side operation

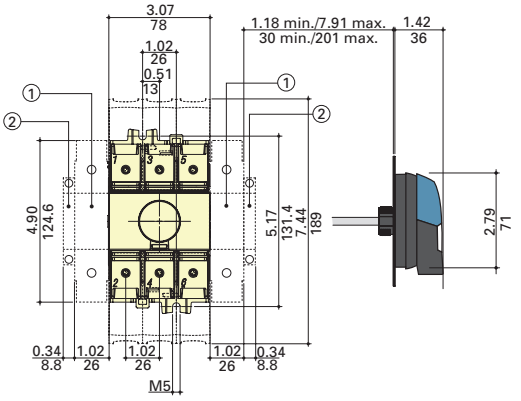


1. Position for 1 switched 4th pole (1 per device max.) or 1 auxiliary contact.
2. Position for 1 auxiliary contact only.

Note: Maximum of 4 Auxiliary contacts, or 3 Auxiliary contacts + one switched 4th pole.

### External front/right side operated selector handle, front operated pistol handle

Handle type

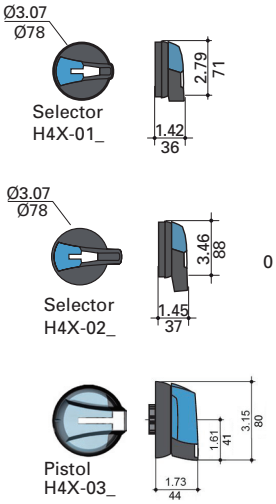


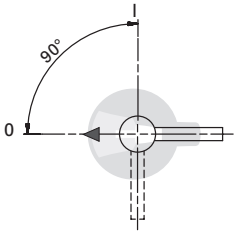


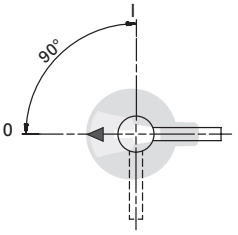


Door drilling layouts

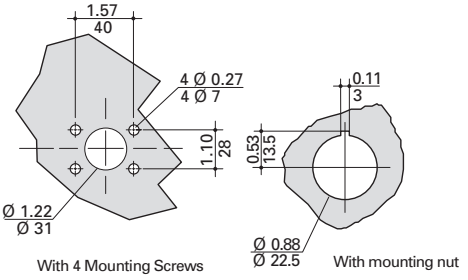


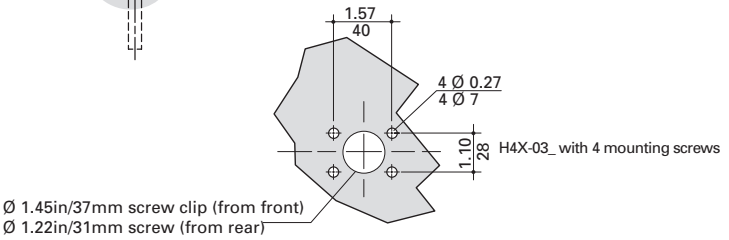

# UL 98 non-fused rotary disconnect switches—100, 200 and compact 400 A

**For a complete assembly, select:**

Select for standard application

## Switch

+

| Amps | Poles | SCCR (kA) | Max horsepower rating 1-phase 220/240 | 3-phase 220/240 | 3-phase 440/480 | 3-phase 600 | Catalog no. |
|---|---|---|---|---|---|---|---|
| 100 | 3 | 200 | 10 | 30 | 75 | 100 | RD100-3-SCCR |
| 200 | 3 | | 10 | 75 | 150 | 200 | RD200-3 |
| | 4 | | 10 | 75 | 150 | 200 | RD200-4 |
| 400 | 3 | | - | 125 | 250 | 350 | RD400-3 |
| | 4 | | - | 125 | 250 | 350 | RD400-4 |

**Terminal lug kit**

| Switch amps | Poles | Lugs per kit | Conductor AWG size/type | Catalog no. |
|---|---|---|---|---|
| 100-200 | 2 | 2 | 6-300 kcmil 75°C Cu/ Al | LUG1-2 |
| | 3 | 3 | | LUG1-3 |
| | 4 | 4 | | LUG1-4 |
| 400 | 2 | 2 | 4-600 kcmil or Dual 1/0-250 kcmil 75°C Cu/ Al | LUG2-2 |
| | 3 | 3 | | LUG2-3 |
| | 4 | 4 | | LUG2-4 |
| | 2 | 2 | (2) 6-350 kcmil 75°C Cu/ Al | LUG3-2 |
| | 3 | 3 | | LUG3-3 |
| | 4 | 4 | | LUG3-4 |

**PLUS**

## Handle

**Direct mount handle - mounts directly to switch, no shaft required**

| For switch cat. no. | Color | Test function | Padlockable | Catalog no. |
|---|---|---|---|---|
| All switches | Black | N | Y | DIR-03 |

**OR**

Or

**External front operated pistol handles - shaft required**

| NEMA type | Color | Test function | Padlockable | Defeatable | Catalog no. |
|---|---|---|---|---|---|
| 1, 3R, 12 | Black | N | Y | Y | H12-03B |
| | Red/yellow | | | | H12-03R |
| 1, 3R, 4, 4X, 12 | Black | | | | H4X-06B |
| | Red/yellow | | | | H4X-06R |

Metallic hasp (heavy duty) external front operated pistol handles - shaft required

| NEMA type | Color | Test function | Padlockable | Defeatable | Catalog no. |
|---|---|---|---|---|---|
| 1, 3R, 4, 4X, 12 | Black | N | Y | Y | H4X-06BHD |
| | Red/yellow | | | | H4X-06RHD |

+

**Shafts for pistol handles**

| Length — in (mm) | Mounting depth (X) - in (mm) | Catalog no. |
|---|---|---|
| 7.9 (200) | 5.31~10.43 (135~265) | SH5-200 |
| 12.6 (320) | 5.31~15.16 (135~385) | SH5-320 |
| 15.7 (400) | 5.31~18.31 (135~465) | SH5-400 |

+

**Shaft Guide**

| | Catalog no. |
|---|---|
| Required for 15.7î (400mm) long shafts, optional for other lengths | SH-GUIDE2 |

**AND...**

Accessories

## Aux. contacts

**Auxiliary contacts**

| Contact type | No. of contacts | Continuous amp rating | Voltage Vac | Max number of aux contacts per switch | Catalog no. |
|---|---|---|---|---|---|
| NO + NC | 1 of each | 10.1 | 125-250 | 2 | BAC03* |
| NO + NC | | | | | BAC04* |
| NO + NC | | 1 | 125 | | BAC11* |
| NO + NC | | | | | BAC12* |

* For one auxiliary contact, install either BAC03 or BAC11. For two auxiliary contacts, install BAC03 + BAC04, or BAC11 + BAC12.

**AND...**

## Shrouds

**Terminal shrouds - includes terminal shroud for Lineside or loadside**

| Switch amps | Poles | Location on switch | Catalog no. |
|---|---|---|---|
| 100-200 | 3 | Lineside | TSH4-3T |
| | | Loadside | TSH4-3B |
| | 4 | Lineside or loadside | TSH4-4TB |
| 400 | 3 | Lineside | TSH5-3T |
| | | Loadside | TSH5-3B |
| | 4 | Lineside or loadside | TSH5-4TB |

## Dimensions — in (mm)

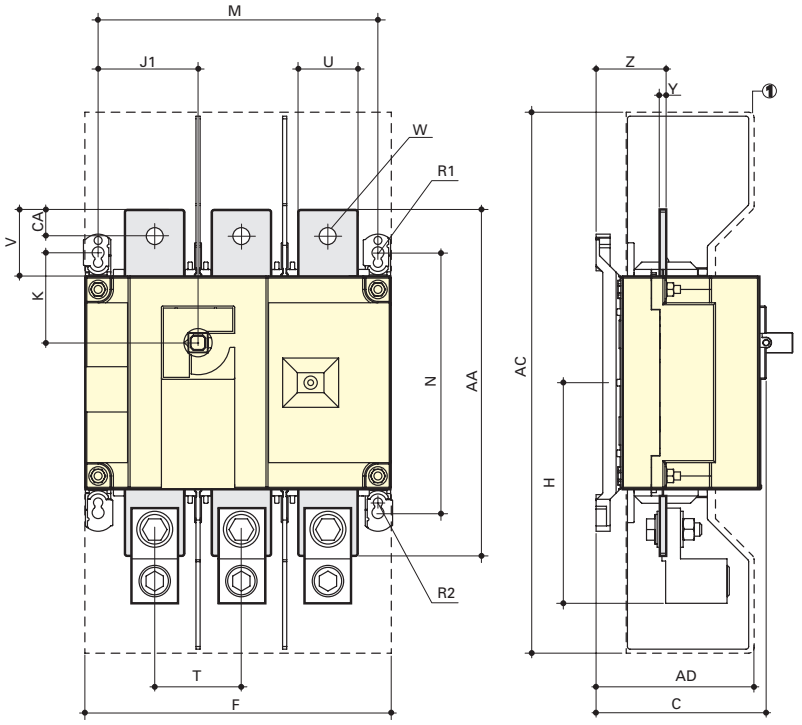


| Switch amps | Overall dim. C | Terminal shrouds AC | Terminal shrouds AD | Switch body F 3p. | Switch body F 4p. | Switch body H | Switch body J1 3p. | Switch body J1 4p. | Switch body K | Switch body M 3p. | Switch body M 4p. | Switch mounting N | Switch mounting R1 | Switch mounting R2 | Switch mounting T | Switch mounting U | Connection V | Connection W | Connection Y | Connection Z | Connection A A | Connection AC |
|---|---|---|---|---|---|---|---|---|---|---|---|---|---|---|---|---|---|---|---|---|---|---|
| 100 | 3.72 (95) | 10.1 (256) | 3.05 (78) | 7.09 (180) | 9.06 (230) | 4.22 (107) | 2.17 (55) | 4.13 (105) | 1.8 (46) | 6.3 (160) | 8.27 (210) | 5.31 (135) | 0.35 (9) | 0.27 (7) | 1.97 (50) | 0.98 (25) | 1.18 (30) | 0.43 (11) | 0.14 (4) | 1.35 (34) | 6.3 (160) | 0.6 (15) |
| 200 | 3.72 (95) | 10.1 (256) | 3.05 (78) | 7.09 (180) | 9.06 (230) | 4.22 (107) | 2.17 (55) | 4.13 (105) | 1.8 (46) | 6.3 (160) | 8.27 (210) | 5.31 (135) | 0.35 (9) | 0.27 (7) | 1.97 (50) | 0.98 (25) | 1.18 (30) | 0.43 (11) | 0.14 (4) | 1.35 (34) | 6.3 (160) | 0.6 (15) |
| 400 | 4.92 (128) | 16 (406) | 4.15 (115) | 9.05 (230) | 11.4 (290) | 6.53 (166) | 2.95 (75) | 5.31 (135) | 2.65 (68) | 8.26 (210) | 10.6 (270) | 7.67 (195) | 0.35 (9) | 0.27 (7) | 2.56 (65) | 1.77 (45) | 1.97 (50) | 0.43 (13) | 0.2 (5) | 2.08 (53) | 10.2 (260) | 0.8 (20) |

### DIR-03 direct mount handle

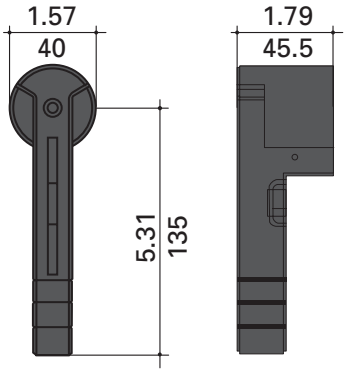


### External front handle

Handle type

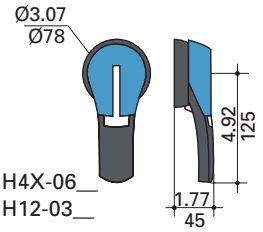


Direction of front operation

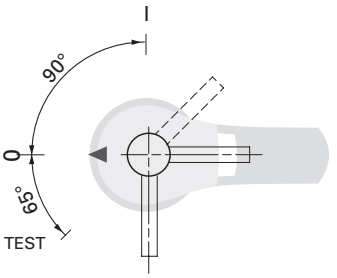


Door drilling layout

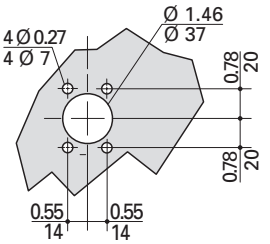


### Terminal lugs

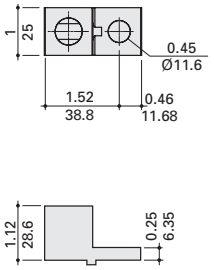


LUG1-_ 100 to 200 A

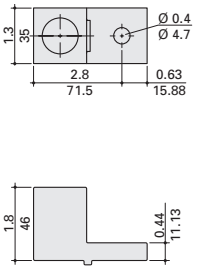


LUG2-_ 400 A

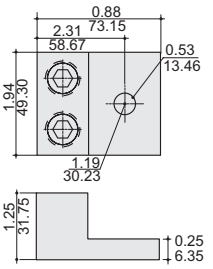


LUG3-_ 400 A

# UL 98 non-fused rotary disconnect switches — 600, 800, 1000 and 1200 A

**For a complete assembly, select:**

Select for standard application

## Switch

| Amps | Poles | SCCR (kA) | Max horsepower rating 3-phase 220/240 | 3-phase 440/480 | 3-phase 600 | DC* 125 | DC* 250 | Catalog no. |
|---|---|---|---|---|---|---|---|---|
| 600 | 3 | 200 | 240 | 400 | 350 | 20 | 50 | RD600-3 |
| | 4 | | 240 | 400 | 350 | 20 | 50 | RD600-4 |
| 800 | 3 | 100 | 200 | 500 | 500 | - | - | RD800-3 |
| | 4 | | 200 | 500 | 500 | - | - | RD800-4 |
| 1000 | 3 | | 200 | 500 | 500 | - | - | RD1000-3 |
| | 4 | | 200 | 500 | 500 | - | - | RD1000-4 |
| 1200 | 3 | | 200 | 500 | 500 | - | - | RD1200-3 |
| | 4 | | 200 | 500 | 500 | - | - | RD1200-4 |

* DC ratings use two poles in series.

+

**Terminal lug kit**

| Switch amps | Poles | Lugs per kit | Lugs required per pole | Conductor AWG size/type | Catalog no. |
|---|---|---|---|---|---|
| 600 | 3 | 3 | 1 | (2) 2-600 kcmil 75°C Cu/ Al | LUG5-3 |
| | 4 | 4 | | | LUG5-4 |
| 800-1200 | 3 | 6 | 2 | (4) 2-600 kcmil 75°C Cu/ Al | LUG6-6 |
| | 4 | 8 | | | LUG6-8 |

**PLUS**

Direct mount handle - mounts directly to switch, no shaft required

| For switch cat. no. | Color | Test function | Padlockable | Catalog no. |
|---|---|---|---|---|
| All switches | Black | N | Y | DIR-04 |

**OR**

## Handles

Or

**External front operated pistol handles - shaft required**

| NEMA type | Color | Test function | Padlockable | Defeatable | Catalog no. |
|---|---|---|---|---|---|
| 1, 3R, 4, 4X, 12 | Black | N | Y | Y | H4X-07B (1) |
| | Red/yellow | | | | H4X-07R (1) |
| | Black | | | | H4X-08B (2) |
| | Red/yellow | | | | H4X-08R (2) |

**Metallic hasp (heavy duty) external front operated pistol handles - shaft required**

| NEMA type | Color | Test function | Padlockable | Defeatable | Catalog no. |
|---|---|---|---|---|---|
| 1, 3R, 4, 4X, 1 | Black | N | Y | Y | H4X-07BHD (3) |
| | Red/yellow | | | | H4X-07RHD (3) |
| | Black | | | | H4X-08BHD (4) |
| | Red/yellow | | | | H4X-08RHD (4) |

+

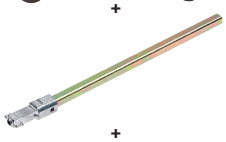

**Shafts for pistol handles**

| Length — in (mm) | Mounting depth (X) — in (mm) | Catalog no. |
|---|---|---|
| 7.9 (200) | 8.70~13.50 (221~343) | SH6-200 |
| 12.6 (320) | 8.70~18.23 (221~463) | SH6-320 |
| 15.7 (400) | 8.70~21.38 (221~543) | SH6-400 |

+

**Shaft guide**

| | Catalog no. |
|---|---|
| Required for 15.7" (400mm) long shafts, optional for other lengths | SH-GUIDE2 |

**AND...**

Accessories

## Aux. contacts

**Auxiliary contacts**

| Contact type | No. of contacts | Continuous amp rating | Voltage (Vac) | Max number of aux contacts per switch | Catalog no. |
|---|---|---|---|---|---|
| NO + NC | 1 of each | 10.1 | 125-250 | 2 | BAC03* |
| NO + NC | 1 of each | | | | BAC04* |
| NO + NC | 1 of each | 1 | 125 | | BAC11* |
| NO + NC | 1 of each | | | | BAC12* |

* For one auxiliary contact, install either BAC03 or BAC11. For two auxiliary contacts, install BAC03 + BAC04, or BAC11 + BAC12.

**AND...**

## Shrouds

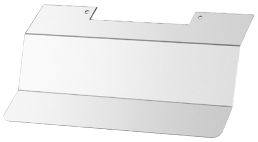

Terminal shrouds* — includes terminal shroud for lineside or loadside

| Switch amps | Poles | Location on switch | Catalog no. |
|---|---|---|---|
| 600 | 3 | Lineside or loadside | TSH6-3TB |
| | 4 | | TSH6-4TB |
| 800-1200 | 3 | | TSH7-3TB |
| | 4 | | TSH7-4TB |

* Shroud for lineside included with switch.

## Dimensions — in (mm)

600 A

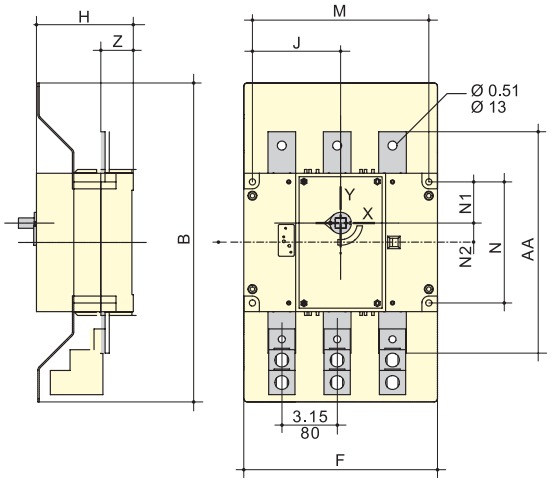


800 to 1200 A

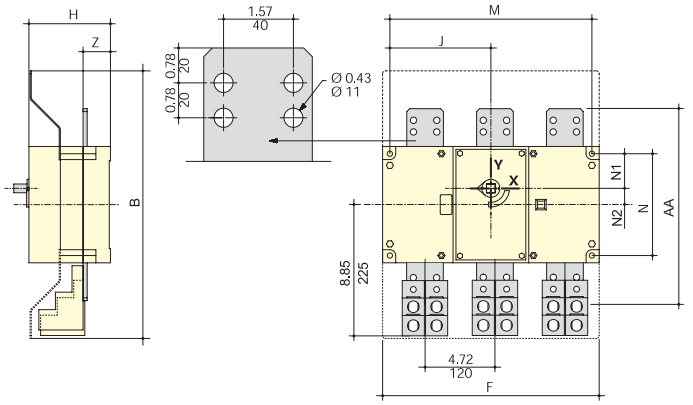


| Switch amps | Terminal shrouds B | Switch body | | | | | | Switch mounting | | | | Connection | |
|---|---|---|---|---|---|---|---|---|---|---|---|---|---|
| | | F 3p. | F 4p. | H | J 3p. | J 4p. | M 3p. | M 4p. | N | N1 | N2 | A A | Z |
| 600 | 18.12 (460) | 11 (280) | 14.17 (360) | 5.5 (140) | 5 (128) | 6.59 (168) | 10.03 (255) | 13.19 (335) | 6.88 (175) | 2.34 (60) | 1.1 (28) | 12.6 (320) | 1.85 (47) |
| 800 | 18.12 (460) | 14.64 (372) | 19.37 (492) | 5.5 (140) | 6.83 (174) | 9.19 (234) | 13.66 (347) | 18.38 (467) | 6.88 (175) | 2.34 (60) | 1.1 (28) | 13 (330) | 1.85 (47) |
| 1000 | 18.12 (460) | 14.64 (372) | 19.37 (492) | 5.5 (140) | 6.83 (174) | 9.19 (234) | 13.66 (347) | 18.38 (467) | 6.88 (175) | 2.34 (60) | 1.1 (28) | 13 (330) | 1.85 (47) |
| 1200 | 18.12 (460) | 14.64 (372) | 19.37 (492) | 5.5 (140) | 6.83 (174) | 9.19 (234) | 13.66 (347) | 18.38 (467) | 6.88 (175) | 2.34 (60) | 1.1 (28) | 13 (330) | 1.85 (47) |

DIR-04 Direct mount handle

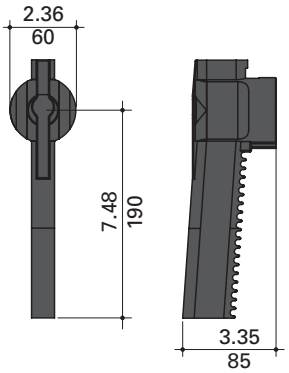


Terminal lugs

External front pistol handles

Handle Type

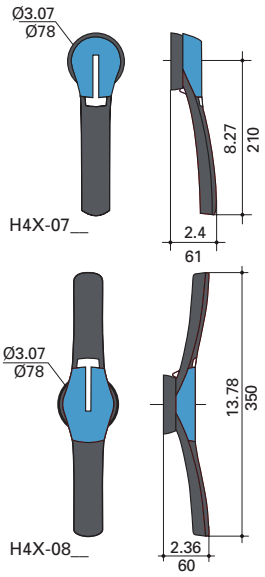


Direction of Front Operation

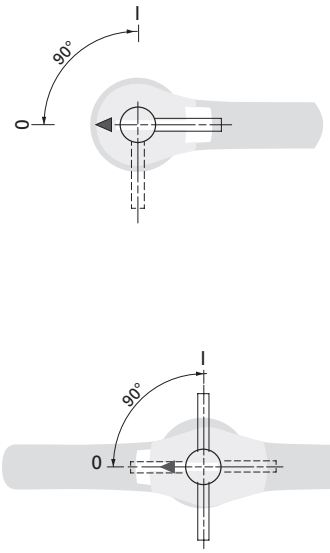


Door drilling layout

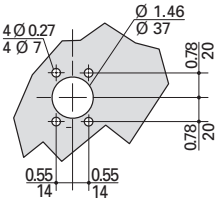


LUG5-__, LUG6-__ 600 to 1200 A

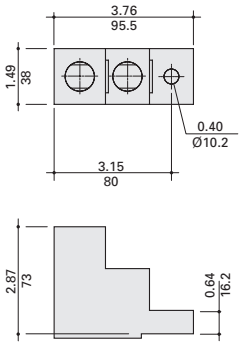

# UL 508 non-fused rotary disconnect switches — 16 to 80 A

Eaton UL 508 load break disconnect switches allow safe control and safe disconnection of any motor application or to isolate a circuit within the panel.

These disconnect switches are compact and offer a wide variety of accessories like 4th poles, Auxiliary contacts, door mounting and 6/8-Pole kits.

## Features

- Suitable for motor disconnect
- DIN-Rail or panel mount
- Door mount option
- Disconnect switches are front, right side or direct handle operable
- Finger-safe

## Agency information

- UL 508, Guide NLRV, File E155129
- CSA C22.2 No. 14, File 257020
- Conforms with IEC 60947-3

## Online resources

Visit Eaton.com/bussmannseries for:

- CAD drawings
- Instruction sheets
- UL information

## Related Bussmann series products

| Fuse blocks |
|---|
| Modular Class H(K), J and RK fuse blocks up to 600 A |
| Modular Class H(K), J and RK power distribution fuse blocks up to 400 A |
| Modular, finger-safe CH Class CC and J, and UL supplemental and IEC 10x38mm DIN-Rail holders up to 60 A |
| Finger-safe Optima Class CC, UL supplemental and IEC 10x38mm DIN-Rail/panel mount holders up to 30 A |
| Finger-safe Optima™ Class CC, UL supplemental and IEC 10x38mm DIN-Rail/panel mount protection modules up to 30 A |

## IEC specifications

RD16-3-508

RD16-3-508 with 6-pole conversion kit

| Catalog no. | | RD16-3-508 | RD25-3-508 | RD40-3-508 | RD63-3-508 | RD80-3-508 |
|---|---|---|---|---|---|---|
| Thermal current $I_{th}$ at 40°C (A) | | 16 | 25 | 40 | 63 | 80 |
| Rated insulation voltage $U_i$ (V) | | 800 | 800 | 800 | 800 | 800 |
| Rated impulse withstand voltage $U_{imp}$ (kV) | | 8 | 8 | 8 | 8 | 8 |
| **Rated operation currents Ie (A)** | | | | | | |
| Load duty category | Rated voltage | A/B [1] | A/B [1] | A/B [1] | A/B [1] | A/B [1] |
| 500 | AC-22 A/ AC-22 B | 16/16 | 25/25 | 40/40 | 63/63 | 80/80 |
| | AC-23A/ AC-23 B | 16/16 | 25/25 | 25/25 | 63/63 | 63/63 |
| 690 | AC-21 A/ AC-21 B | 16/16 | 25/25 | 40/40 | 63/63 | 80/80 |
| | AC-22 A/ AC-22 B | 16/16 | 25/25 | 32/40 | 40/63 | 63/80 |
| | AC-23A/ AC-23 B | 16/16 | 25/25 | 25/25 | 40/40 | 40/40 |
| **Operational power in AC-23 (kW)** | | | | | | |
| 400 Vac without prebreak AC [1, 2] | | 7.5 | 11 | 18.5 | 30 | 37 |
| 500 Vac without prebreak AC [1, 2] | | 7.5 | 11 | 15 | 30 | 37 |
| 690 Vac without prebreak AC [1, 2] | | 7.5 | 15 | 18.5 | 30 | 37 |
| **Overload capacity ($U_e$ 415 Vac)** | | | | | | |
| Rated short-time withstand current 0.3 s. ICW (kA RMS) [3] | | 2.5 | 2.5 | 2.5 | 3 | 3 |
| Rated short-time making capacity $I_{cm}$ (kA peak) [3] | | 6 | 6 | 6 | 9 | 9 |
| **Fuse protected short-circuit withstand (kA RMS prospective)** | | | | | | |
| Prospective short-circuit current (kA RMS) [3] | | 50 | 50 | 50 | 50 | 50 |
| Associated fuse rating (A) [3] | | 16 | 25 | 40 | 63 | 80 |
| **Connection** | | | | | | |
| Minimum Cu cable cross section (mm²) | | 1.5 | 1.5 | 1.5 | 2.5 | 2.5 |
| Maximum Cu cable section (mm²) | | 16 | 16 | 16 | 35 | 35 |
| Tightening torque min/max (N•m) | | 2/2.2 | 2/2.2 | 2/2.2 | 3.5/3.85 | 3.5/3.85 |

1 A/B: Category with index A = frequent operation; category with index B = infrequent operation.
2 The power value is given for information only; the current values vary from one manufacturer to another.
3 For a rated operating voltage, $U_e$ = 400 Vac.

## UL specifications

RD16-3-508

RD16-3-508 with 6-pole conversion kit

| Catalog no. | | RD16-3-508 | RD25-3-508 | RD40-3-508 | RD63-3-508 | RD80-3-508 |
|---|---|---|---|---|---|---|
| UL standard | | UL 508 | UL 508 | UL 508 | UL 508 | UL 508 |
| Max ampacity | | 16 A | 25 A | 40 A | 63 A | 80 A |
| Handle operation | | Front/Side | Front/Side | Front/Side | Front/Side | Front/Side |
| **UL ratings** | | | | | | |
| Max voltage (AC) | | 600 Vac | 600 Vac | 600 Vac | 600 Vac | 600 Vac |
| Max. Hp ratings | 3-phase, 208 | 3 | 7.5 | 7.5 | 15 | 15 |
| | 3-phase, 240 | 5 | 7.5 | 7.5 | 20 | 20 |
| | 3-phase, 480 | 10 | 15 | 20 | 40 | 40 |
| | 3-phase, 600 | 10 | 20 | 25 | 40 | 40 |
| **Electrical characteristics** | | | | | | |
| SCCR with fuse (kA) | | 65 | 65 | 10/65 | 50/65 | 50/65 |
| Recommended upstream | Fuse class | J | J | J | J | J |
| | Max. fuse rating (A) | 30 | 30 | 60/30 | 100/60 | 100/60 |
| Terminals | | Integral | Integral | Integral | Integral | Integral |
| Wire type | | 75°C Cu | 75°C Cu | 75°C Cu | 75°C Cu | 75°C Cu |
| Wire range and torque - lb-in (N•m) | Solid single | 14-10, 26.5 (3) | 14-10, 26.5 (3) | 14-10, 26.5 (3) | 14-10, 31.1 (3.5) | 14-10, 31.1 (3.5) |
| | Solid dual | 12, 26.5 (3) | 12, 26.5 (3) | 12, 26.5 (3) | 12, 31.1 (3.5) | 12, 31.1 (3.5) |
| | Stranded single | 14-4, 26.5 (3) | 14-4, 26.5 (3) | 14-4 , 26.5 (3) | 14-1, 31.1 (3.5) | 14-1, 31.1 (3.5) |
| | Stranded dual | 14-12, 26.5 (3) | 14-12, 26.5 (3) | 14-12, 26.5 (3) | 10-6, 31.1 (3.5) | 10-6, 31.1 (3.5) |
| **Mechanical characteristics** | | | | | | |
| Endurances/cycles | | 10,000 | 10,000 | 10,000 | 10,000 | 10,000 |
| **Physical characteristics** | | | | | | |
| Dimensions | | See drawings on product pages | | | | |
| Weight- lb (kg) | | 0.5 (0.2) | 0.5 (0.2) | 0.5 (0.2) | 0.7 (0.32) | 0.7 (0.32) |
| **Environmental** | | | | | | |
| Operating temperature | | -20 to 70°C | -20 to 70°C | -20 to 70°C | -20 to 70°C | -20 to 70°C |
| Flammability rating | | UL 94-V0 | UL 94-V0 | UL 94-V0 | UL 94-V0 | UL 94-V0 |
| **Accessories** | | | | | | |
| Handles | Direct | DIR-01 | DIR-01 | DIR-01 | DIR-01 | DIR-01 |
| | Short selector/NEMA 1, 3R, 4, 4X, 12 | H4X-01B | H4X-01B | H4X-01B | H4X-01B | H4X-01B |
| | | H4X-01R | H4X-01R | H4X-01R | H4X-01R | H4X-01R |
| | Long selector/NEMA 1, 3R, 4, 4X, 12 | H4X-02B | H4X-02B | H4X-02B | H4X-02B | H4X-02B |
| | | H4X-02R | H4X-02R | H4X-02R | H4X-02R | H4X-02R |
| | Pistol handle/NEMA 1, 3R, 4, 4X, 12 | H4X-03B | H4X-03B | H4X-03B | H4X-03B | H4X-03B |
| | | H4X-03R | H4X-03R | H4X-03R | H4X-03R | H4X-03R |
| | Metallic hasp (HD) pistol handle/ NEMA 1, 3R, 4, 4X, 12 | H4X-03BHD | H4X-03BHD | H4X-03BHD | H4X-03BHD | H4X-03BHD |
| | | H4X-03RHD | H4X-03RHD | H4X-03RHD | H4X-03RHD | H4X-03RHD |
| Selector handle shafts - 5x5mm | 5.9"/150mm | SH4-150 | SH4-150 | SH4-150 | SH4-150 | SH4-150 |
| | 7.9"/200mm | SH4-200 | SH4-200 | SH4-200 | SH4-200 | SH4-200 |
| | 12.6"/320mm | SH4-320 | SH4-320 | SH4-320 | SH4-320 | SH4-320 |
| Pistol handle shafts - 5x5mm | 7.9"/200mm | SH3-200 | SH3-200 | SH3-200 | SH3-200 | SH3-200 |
| | 12.6"/320mm | SH3-320 | SH3-320 | SH3-320 | SH3-320 | SH3-320 |
| | 15.75"/400mm | SH3-400 | SH3-400 | SH3-400 | SH3-400 | SH3-400 |
| Selector handle shaft guide | | SH-GUIDE1 | SH-GUIDE1 | SH-GUIDE1 | SH-GUIDE1 | SH-GUIDE1 |
| Pistol handle shaft guide | | SH-GUIDE2 | SH-GUIDE2 | SH-GUIDE2 | SH-GUIDE2 | SH-GUIDE2 |
| Door mount kit | | DOOR-508 | DOOR-508 | DOOR-508 | DOOR-508 | DOOR-508 |
| Shrouds/switch amps | 1-Pole | TSH1-1TB | TSH1-1TB | TSH1-1TB | — | — |
| | 3-Pole (loadside and lineside) | TSH1-3TB | TSH1-3TB | TSH1-3TB | TSH2-3TB | TSH2-3TB |
| | Switched 4th pole/switch amps | POLE-16 | POLE-25 | POLE-40 | — | — |
| | Ground module (conforms to IEC 60947-3) | GND-16-40 | GND-16-40 | GND-16-40 | GND-63-80 | GND-63-80 |
| | Neutral module (conforms to IEC 60947-3) | NTRL-16-40 | NTRL-16-40 | NTRL-16-40 | NTRL-63-80 | NTRL-63-80 |
| Auxiliary contacts | NO + NC (1 ea.) | BAC01 | BAC01 | BAC01 | BAC01 | BAC01 |
| | (2) NO | BAC02 | BAC02 | BAC02 | BAC02 | BAC02 |
| | AC ratings | | | | | |
| | Volts | 240 Vac | 240 Vac | 240 Vac | 240 Vac | 240 Vac |
| | Amps | 10 | 10 | 10 | 10 | 10 |
| 6-/8-pole conversion kit gangs two switches of same rating, 16-80 A switch amps | | KIT-6POLE | KIT-6POLE | KIT-6POLE | KIT-6POLE | KIT-6POLE |

— Not available.

## UL 508 non-fused rotary disconnect switches —16, 25, 40, 63 and 80 A

**For a complete assembly, select:**

Select for standard application

### Switch

| Amps | Poles | SCCR @600V (kA) | Max. Class J fuse amps | Max horsepower rating, 3-Phase 208 | 220/240 | 440/480 | 600 | Conductor AWG size/ type | Catalog no. |
|---|---|---|---|---|---|---|---|---|---|
| 16 | 3 | 65 | 30 | 3 | 5 | 10 | 10 | 14-10 Sol, Dual 12 Sol, 14-4 Str, Dual 14-12 Str, 75°C Cu | RD16-3-508 |
| 25 | | | | 7.5 | 7.5 | 15 | 20 | | RD25-3-508 |
| 40 | | 10 | 60 | 7.5 | 7.5 | 20 | 25 | | RD40-3-508 |
| | | 65 | 30 | | | | | | |
| 63 | | 50 | 100 | 15 | 20 | 40 | 40 | 14-10 Sol, Dual 12 Sol, 14-1 Str, Dual 10-6 Str, 75°C Cu | RD63-3-508 |
| | | 65 | 60 | | | | | | |
| 80 | | 50 | 100 | 15 | 20 | 40 | 40 | | RD80-3-508 |
| | | 65 | 60 | | | | | | |

**PLUS**

### Handles

**Direct mount handle - mounts directly to switch, no shaft required**

| For switch cat. no. | Color | Test function | Padlockable | Catalog no. |
|---|---|---|---|---|
| All switches | Black | N | Y - On Switch | DIR-01 |

**OR**

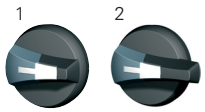


**External front or right side operated selector handles - shaft required**

| NEMA type | Color | Handle length | Test function | Padlockable | Catalog no. |
|---|---|---|---|---|---|
| 1, 3R, 4, 4X, 12 | Black | Short | N | Y | H4X-01B (1) |
| | Red/yellow | | | | H4X-01R (1) |
| | Black | Long | | | H4X-02B (2) |
| | Red/yellow | | | | H4X-02R (2) |

**Or**

**External front operated pistol handles - shaft required**

| NEMA type | Color | Handle length | Test function | Padlockable | Defeatable | Catalog no. |
|---|---|---|---|---|---|---|
| 1, 3R, 4, 4X, 12 | Black | — | N | Y | Y | H4X-03B |
| | Red/yellow | | | | | H4X-03R |

Metallic hasp (heavy duty) external front operated pistol handles - shaft required

| NEMA type | Color | Handle length | Test function | Padlockable | Defeatable | Catalog no. |
|---|---|---|---|---|---|---|
| 1, 3R, 4, 4X, 12 | Black | — | N | Y | Y | H4X-03BHD |
| | Red/yellow | | | | | H4X-03RHD |

**+**

**Shafts for selector handles**

| Length — in (mm) | Mounting depth (X) - in (mm) | Catalog no. |
|---|---|---|
| 5.9 (150) | 3.50~7.60 (89~193) | SH4-150 (1) |
| 7.9 (200) | 3.50~9.50 (89~241) | SH4-200 (1) |
| 12.6 (320) | 3.50~14.9 (89~378) | SH4-320 (1) |

**Shafts for pistol handles**

| Length — in (mm) | Mounting depth (X) - in (mm) | Catalog no. |
|---|---|---|
| 7.9 (200) | 3.30~7.40 (84~188) | SH3-200 (2) |
| 12.6 (320) | 3.30~9.30 (84~236) | SH3-320 (2) |
| 15.7 (400) | 3.30~14.7 (84~373) | SH3-400 (2) |

**+**

**Shaft guides for selector and pistol handles**

| Handle type | | Catalog no. |
|---|---|---|
| Selector | Required for 12.6" (320mm) long shafts, optional for other lengths | SH-GUIDE1 |
| Pistol | Required for 15.7" (400mm) long shafts, optional for other lengths | SH-GUIDE2 |

**+**

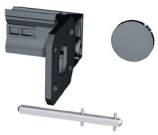

**Door mount kit**

For mounting switch on the right side of the enclosure or directly on the enclosure door using switch side operation shaft location. Kit includes a shaft. Order switch and selector handle separately.

| Switch | Catalog no. |
|---|---|
| All switches - kit includes shaft | DOOR-508 |

**AND...**

**Accessories**

**Aux. Contacts**

**Auxiliary contacts**

| Contact type | No. of contacts | Continuous amp rating | Voltage (Vac) rating | Max number of units per switch | Catalog no. |
|---|---|---|---|---|---|
| NO + NC | 1 Ea. | 10 | 240 | 2 (1 per side/4 contacts total) | BAC01 |
| NO | 2 | | | | BAC02 |

**AND...**

**Shrouds**

**Terminal shrouds - includes terminal shroud for both lineside and loadside**

| Switch amps | Poles | Location on switch | Catalog no. |
|---|---|---|---|
| 16-40 | 1 (for switched 4th pole) | Lineside and loadside | TSH1-1TB |
| 16-40 | 3 | | TSH1-3TB |
| 63-80 | | | TSH2-3TB |

**AND...**

**4th pole**

**Switched 4th pole - converts 3-pole switch to 4-pole switch**

| Switch amps | Catalog no. |
|---|---|
| 16 | POLE-16 |
| 25 | POLE-25 |
| 40 | POLE-40 |

**AND...**

**Gnd./neut. mods**

**Ground and Neutral Modules - provides unswitched ground or neutral pole - conforms to IEC 60947-3**

| Switch amps | Module Type | Catalog no. |
|---|---|---|
| 16-40 | Ground | GND-16-40 |
| 63-80 | | GND-63-80 |
| 16-40 | Neutral | NTRL-16-40 |
| 63-80 | | NTRL-63-80 |

**AND...**

**6 pole kit**

Order switches separately

6-pole conversion kit - creates a 6-pole switch by ganging two 3-pole switches of equal rating

| Switch amps | Catalog no. |
|---|---|
| All switches | KIT-6POLE* |

* Kit ships with a direct handle. If external handle is needed order a selector handle and shaft for the UL 508 Rotary Disconnect Switches.

Note: To create an 8-pole switch from 16 to 40 amp switches, use two 3-pole switches of equal ratings plus two switched 4th poles (part # POLE-_).

Auxiliary contact configurations

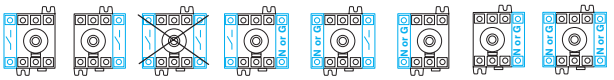

Ground and neutral module, and switched 4th pole configurations.

## Dimensions — in (mm)

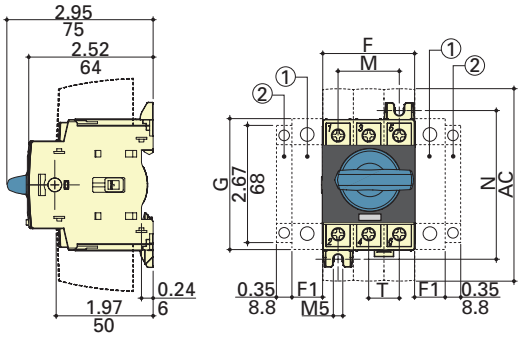


Direct handle operation

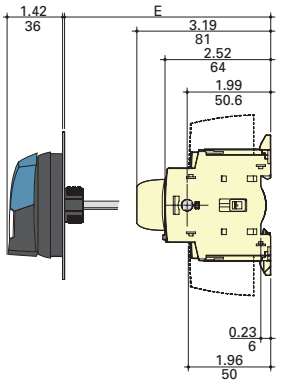


External front operation

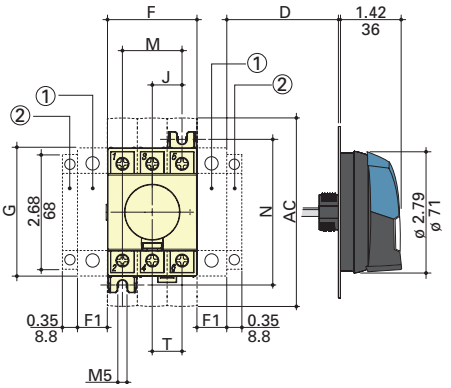


External side operation

1. Position for 1 switched 4th pole (1 per device max.), or ground or neutral module (2 per device max.) or 1 auxiliary contact.
2. Position for 1 auxiliary contact only.

Note: Maximum of 4 Auxiliary contacts, or 3 Auxiliary contacts + one ground or neutral module, or one switched 4th pole.

| Switch amps | Overall dimensions | | | | Terminal shroud AC | Switch body | | | Switch mounting | | | Connection T |
|---|---|---|---|---|---|---|---|---|---|---|---|---|
| | D min | D max | E min | E max | | F | F1 | G | J | M | N | |
| 16 to 40 | 1.18 (30) | 9.25 (235) | 3.94 (100) | 14.64 (372) | 4.33 (110) | 1.77 (45) | 0.59 (15) | 2.67 (68) | 0.59 (15) | 1.18 (30) | 2.95 (75) | 0.59 (15) |
| 63 to 80 | 1.18 (30) | 9.25 (235) | 3.93 (100) | 14.64 (372) | 4.33 (110) | 2.06 (53) | 0.69 (18) | 2.99 (76) | 0.69 (18) | 1.38 (35) | 3.35 (85) | 0.69 (18) |

## Dimensions — in (mm)

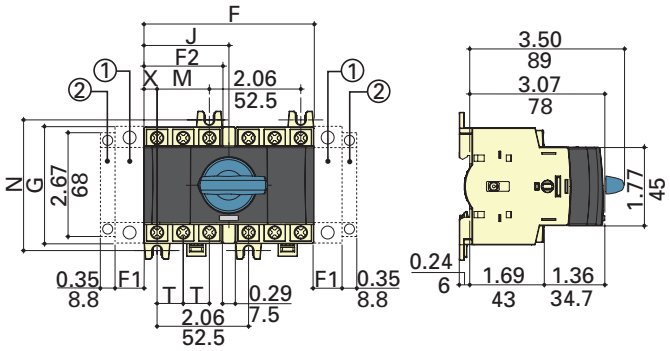


Direct front operation for 6/8-pole disconnects

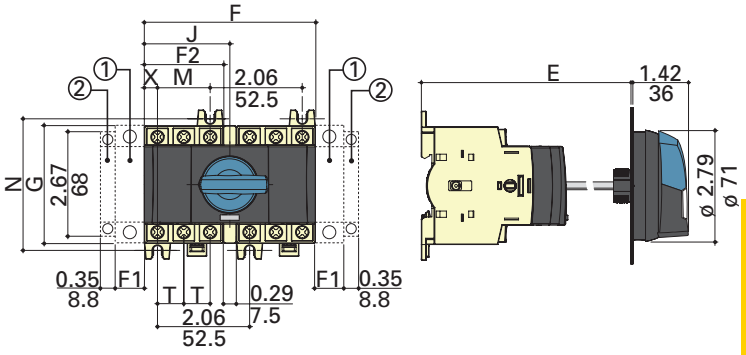


External front operation for 6/8-pole disconnects

1. Position for 1 switched 4th pole (1 per device max.) or 1 auxiliary contact.
2. Position for 1 auxiliary contact only.
Note: Maximum of 4 auxiliary contacts, or 3 auxiliary contacts + one switched 4th pole.

| Switch amps | Overall dimensions | | | | Switch body | | | Switch mounting | | Connection | |
|---|---|---|---|---|---|---|---|---|---|---|---|
| | E min | E max | F | F1 | F2 | G | J | M | N | T | X |
| 16 to 40 | 4.13 (105) | 14.64 (372) | 3.83 (98) | 0.59 (15) | 1.77 (45) | 2.67 (68) | 1.92 (48.75) | 1.18 (30) | 2.95 (75) | 0.59 (15) | 0.29 (8) |
| 63 to 80 | 4.13 (105) | 14.65 (372) | 4.13 (105) | 0.69 (18) | 2.06 (53) | 2.99 (76) | 2.06 (52.5) | 1.38 (35) | 3.35 (85) | 0.69 (18) | 0.34 (9) |

## External selector and pistol handles

Handle type

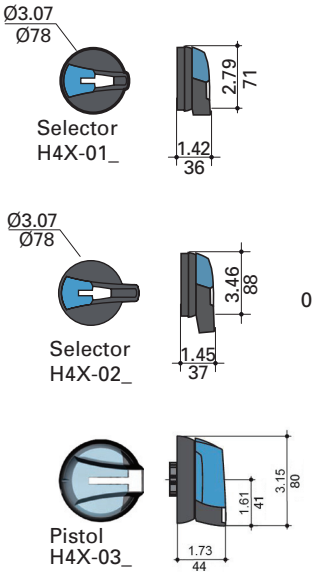


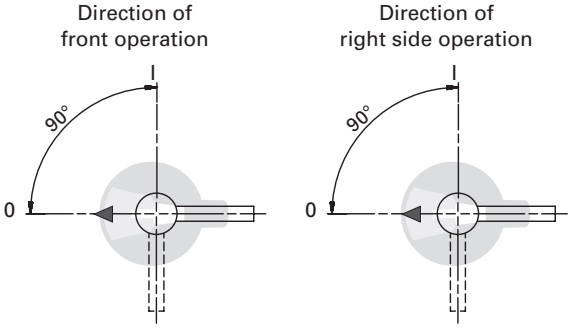


Door drilling layouts

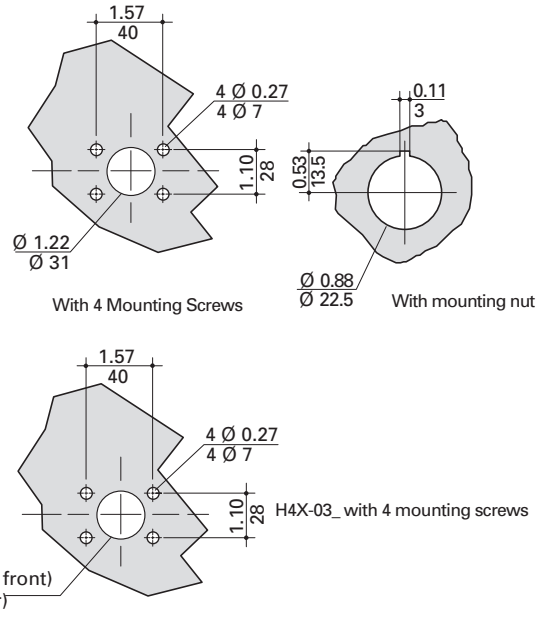

## UL 98 and UL 508 enclosed disconnect switches

Enclosed fused and non-fused rotary disconnect switches from 16 to 1200 A in NEMA 1, 3R, 4, 4X, 12 enclosures.

### Ratings

RoHS 2011/65/EU

- Volts
  - 600 Vac
  - 250-600 Vdc*
- Amps 16-1200 A
- SCCR
  - UL 98 25-200 kA
  - UL 508 10-65 kA

* Some non-fused disconnect switches are not rated for DC applications.

### Agency information

- UL 98 Listed, Guide WIAX, WIAX7, File E182262
- UL 508 Listed, Guide NLRV, NLRV, File E155129
- cULus Listed to Canadian Standard 22.2, No. 14
- cULus Listed to Canadian Standard 22.2, No. 4
- Conforms with IEC 60947-3
- RoHS compliant
- CE

### Operating temperature

- -20°C to 70°C

### 4X plastic enclosure flammability ratings

- Polycarbonate UL 94-5V A-0
- Fiberglass UL 94-5V

### Field installed accessories

- Auxiliary contacts
- Terminal shrouds
- Switched 4th pole (UL 508 only)

### Online resources

Visit Eaton.com/bussmannseries for:

- CAD drawings
- Instruction sheets
- UL information

### Features

- UL 98 Listed for general purpose, main disconnect, or branch circuit protection up to 600 Vac/dc
- UL 508 Listed for motor disconnect applications up to 600 Vac
- Multiple field installed accessories enhance the enclosed disconnect switches to fit the desired application
- Lockout/tagout: Up to three 1/4" shank padlocks can be installed on external handles

NEMA 1, 3R, 4 and 12

NEMA 4X 304 stainless steel

NEMA 4X polycarbonate or fiberglass

## UL 98 enclosed fused disconnects — 30 to 800 A

### 3-pole UL 98 600 Vac

Catalog number system:

**ER 4X - 60 J 3 P B**

**ER**

Enclosed Rotary disconnect

**NEMA rating**

1, 3R, 4, 4X (304 SST), 4P (4X Plastic), 12

**Amp rating**

30, 60, 100, 200, 400, 600, 800

**Fuse class**

J = Class J, L = Class L

**Number of poles**

3 = 3-pole

**Handle type**

P = Pistol

**Handle color**

B = Black, R = Red

NEMA 1, 3R, 4 and 12

NEMA 4X
304 stainless steel

NEMA 4X

**30-800A UL 98 fused switches**

### Available Bussmann series fuses

| Fuse class | Catalog symbol/type |
|---|---|
| J | LPJ time-delay, current limiting |
| | JKS fast-acting fuses |
| | DFJ high speed drive fuse |
| L | KRP-C time-delay, current limiting |
| | KTU fast-acting |
| | KLU time-delay |
| | KRP-CL (225-600 A) |

### Catalog numbers

All catalog numbers provided with integral or installed lugs and a black selector handle. Order Red/yellow handle by changing the suffix "B" to "R."

| | | NEMA enclosure type and catalog no. | | | | | |
|---|---|---|---|---|---|---|---|
| Switch amps | Fuse class | 1 | 3R | 4 | 4X plastic[1] | 4X 304 stainless | 12 |
| 30 | J | ER1-30J3PB | ER3R-30J3PB | ER4-30J3PB | ER4P-30J3PB | ER4X-30J3PB | ER12-30J3PB |
| 60 | | ER1-60J3PB | ER3R-60J3PB | ER4-60J3PB | ER4P-60J3PB | ER4X-60J3PB | ER12-60J3PB |
| 100 | | ER1-100J3PB | ER3R-100J3PB | ER4-100J3PB | ER4P-100J3PB | ER4X-100J3PB | ER12-100J3PB |
| 200 | | ER1-200J3PB | ER3R-200J3PB | ER4-200J3PB | ER4P-200J3PB | ER4X-200J3PB | ER12-200J3PB |
| 400 | | ER1-400J3PB | ER3R-400J3PB | ER4-400J3PB | ER4P-400J3PB | ER4X-400J3PB | ER12-400J3PB |
| 600 | | ER1-600J3PB | ER3R-600J3PB | ER4-600J3PB | ER4P-600J3PB | ER4X-600J3PB | ER12-600J3PB |
| 800 | L | ER1-800L3PB | ER3R-800L3PB | ER4-800L3PB | ER4P-800L3PB | ER4X-800L3PB | ER12-800L3PB |

1 Enclosures ≤100 A are polycarbonate, flammability rating UL 94-5V A-V0, ≥200 A are fiberglass, flammability rating UL 94-5V.

### Switch ratings

For wire types, ranges and terminal torques, see table on page 11-55.

| | | | | Voltage | | | |
|---|---|---|---|---|---|---|---|
| Switch amps | Switch cat. no. | Fuse class | Poles | Vac | Vdc | SCCR @ Vac (kA) | Max. Hp @ 600 Vac |
| 30 | RDF30J-3 | J | 3 | 600 | 250 | 200 | 20 |
| 60 | RDF60J-3 | | | | | | 50 |
| 100 | RDF100J-3 | | | | | | 75 |
| 200 | RDF200J-3 | | | | N/A | | 150 |
| 400 | RDF400J-3 | | | | 250 | | 350 |
| 600 | RDF600J-3 | | | | 600 | | 500 |
| 800 | RDF800L-3 | L | | | | | |

## UL 98 enclosed fused disconnects — 30 to 800 A

### Enclosure weights and dimensions

| Catalog no. family | Amps | Fuse class | NEMA enclosure | H x W x D (in) | Mounting centers h x w (in) A | B | C | Weight (lbs) |
|---|---|---|---|---|---|---|---|---|
| ER_-30J | 30 | J | 1, 3R, 4, 12 | 10x10x6 | 8.3x8.3 | — | — | 15 |
| | | | 4X-SST | | — | 10.7x8.3 | 8.3x10.7 | |
| | | | 4X-plastic [1] | 12x10x6 | — | 12x5.6 | 7.6x10 | 8 |
| ER_-60J | 60 | | 1, 3R, 4, 12 | | 10.3x8.3 | — | — | 19 |
| | | | 4X-SST | | — | 12.7x8.3 | 8.3x10.7 | |
| | | | 4X-plastic [1] | 13x13x6 | — | 14x7.6 | 9.6x12 | 11 |
| ER_-100J | 100 | | 1, 3R, 4, 12 | 14x12x6 | 12.3x10.3 | — | — | 21 |
| | | | 4X-SST | | — | 14.7x10.3 | 12.3x12.7 | |
| | | | 4X-plastic [1] | 13x13x6 | — | 14x7.6 | 9.6x12 | 12 |
| ER_-200J | 200 | | 1, 3R, 4, 12 | 24x20x8 | 22.3x18.3 | — | — | 55 |
| | | | 4X-SST | | — | 24.7x18.3 | 22.3x20.7 | |
| | | | 4X-plastic [1] | 27x21x10 | — | 25.75x14 | — | 39 |
| ER_-400J | 400 | | 1, 3R, 4, 12 | 48x36x12 | 46.3x34.3 | — | — | 188 |
| | | | 4X-SST | | — | 48.7x34.3 | 46.3x36.7 | |
| | | | 4X-plastic [1] | 51x37x14 | — | 50x28.5 | — | 186 |
| ER_-600J | 600 | | 1, 3R, 4, 12 | 48x36x12 | 46.3x34.3 | — | — | 216 |
| | | | 4X-SST | | — | 48.7x34.3 | 46.3x36.7 | |
| | | | 4X-plastic [1] | 51x37x14 | — | 50x28.5 | — | 214 |
| ER_-800L | 800 | L | 1, 3R, 4, 12 | 48x36x12 | 46.3x34.3 | — | — | 216 |
| | | | 4X-SST | | — | 48.7x34.3 | 46.3x36.7 | |
| | | | 4X-plastic [1] | 51x37x14 | — | 50x28.5 | — | 214 |

1 Enclosures ≤100 A are polycarbonate, flammability rating UL 94-5V A-V0, ≥200 A are fiberglass, flammability rating UL 94-5V.

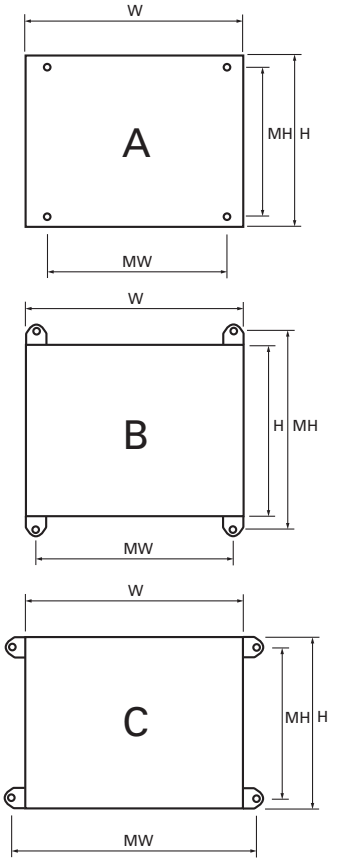


### Available field-Installed accessories - order separately

### Auxiliary contacts - for 30 to 800 amp switches

| Contact type | No. of contacts | Cont. amp rating | Vac | Max. units per switch | Catalog no. |
|---|---|---|---|---|---|
| NO | 1 | 10 | 600 | 4 (30 to 200 A) | BAC05 |
| NC | | | | 8 (400 to 800 A) | BAC06 |

### Terminal shrouds

For 200 to 800 amp switches - includes terminal shroud for lineside or loadside

| Switch amps | Poles | Catalog no. |
|---|---|---|
| 200 | 3 | TSH8-3TB |
| 400 | | TSH9-3TB |
| 600-800 | | TSH10-3TB |

## UL 98 enclosed non-fused disconnects — 30 to 1200 A

### 3-pole UL 98 600 Vac

Catalog number system:

**ER 4X - 60 N 3 P B**

**ER**

Enclosed Rotary disconnect

**NEMA rating**

1, 3R, 4, 4X (304 SST), 4P (4X Plastic), 12

**Amp rating**

30, 60, 100, 200, 400, 600, 800, 1200

**N = non-fused**

**Number of poles**

3 = 3-pole

**Handle type**

P = Pistol

**Handle color**

B = Black, R = Red

NEMA 1, 3R, 4 and 12

NEMA 4X
304 stainless steel

NEMA 4X

**200-1200A UL 98 non-fused switches**

NEMA 1, 3R, 4 and 12

NEMA 4X
304 stainless steel

NEMA 4X

**30-800A UL 98 non-fused switches**

### Catalog numbers

All Catalog numbers provided with integral or installed lugs and a black selector handle. Order Red/yellow handle by changing the suffix "B" to "R."

| Amps | NEMA enclosure type and catalog no. | | | | | |
|---|---|---|---|---|---|---|
| | 1 | 3R | 4 | 4X plastic [1] | 4X 304 stainless | 12 |
| 30 | ER1-30N3PB | ER3R-30N3PB | ER4-30N3PB | ER4P-30N3PB | ER4X-30N3PB | ER12-30N3PB |
| 60 | ER1-60N3PB | ER3R-60N3PB | ER4-60N3PB | ER4P-60N3PB | ER4X-60N3PB | ER12-60N3PB |
| 100 | ER1-100N3PB | ER3R-100N3PB | ER4-100N3PB | ER4P-100N3PB | ER4X-100N3PB | ER12-100N3PB |
| 200 | ER1-200N3PB | ER3R-200N3PB | ER4-200N3PB | ER4P-200N3PB | ER4X-200N3PB | ER12-200N3PB |
| 400 | ER1-400N3PB | ER3R-400N3PB | ER4-400N3PB | ER4P-400N3PB | ER4X-400N3PB | ER12-400N3PB |
| 600 | ER1-600N3PB | ER3R-600N3PB | ER4-600N3PB | ER4P-600N3PB | ER4X-600N3PB | ER12-600N3PB |
| 800 | ER1-800N3PB | ER3R-800N3PB | ER4-800N3PB | ER4P-800N3PB | ER4X-800N3PB | ER12-800N3PB |
| 1200 | ER1-1200N3PB | ER3R-1200N3PB | ER4-1200N3PB | N/ A | ER4X-1200N3PB | ER12-1200N3PB |

1 Enclosures ≤100 A are polycarbonate, flammability rating UL 94-5V A-V0, ≥200 A are fiberglass, flammability rating UL 94-5V.

### Switch ratings

For wire types, ranges and terminal torques, see table on page 11-72.

| Amps | Switch catalog no. | Poles | Vac | SCCR (kA) | Max. Hp @ 600 Vac |
|---|---|---|---|---|---|
| 30 | RD30-3 | 3 | 600 | 100 | 25 |
| 60 | RD60-3 | | | | 50 |
| 100 | RD100-3 | | | 25/100* | |
| 200 | RD200-3 | | | 200 | 200 |
| 400 | RD400-3 | | | | 350 |
| 600 | RD600-3 | | | | |
| 800 | RD800-3 | | | 100 | 500 |
| 1200 | RD1200-3 | | | | |

* 25 kA @ 600 Vac, 100 kA @ 480 Vac.

## UL 98 enclosed non-fused disconnects — 30 to 1200 A

### Enclosure weights and dimensions

| Catalog no. family | Amps | NEMA enclosure | H x W x D (in) | Mounting centers h x w (in) A | B | C | Weight (lbs) |
|---|---|---|---|---|---|---|---|
| ER_-30 | 30 | 1, 3R, 4, 12 | 10x8x6 | 8.3x6.3 | — | — | 11 |
| | | 4X-SST | | — | 10.7x6.3 | 8.3x8.7 | 11 |
| | | 4X-plastic (1) | 9x9x6 | — | 10x3.6 | 5.6x8 | 5 |
| ER_-60 | 60 | 1, 3R, 4, 12 | 10x8x6 | 8.3x6.3 | — | — | 12 |
| | | 4X-SST | | — | 10.7x6.3 | 8.3x8.7 | 12 |
| | | 4X-plastic (1) | 9x9x6 | — | 10x3.6 | 5.6x8 | 5 |
| ER_-100 | 100 | 1, 3R, 4, 12 | 12x10x6 | 10.3x8.3 | — | — | 12 |
| | | 4X-SST | | — | 12.7x8.3 | 8.3x10.7 | 12 |
| | | 4X-plastic (1) | 13x13x6 | — | 14x7.6 | 9.6x12 | 8 |
| ER_-200 | 200 | 1, 3R, 4, 12 | 20x16x8 | 18.3x14.3 | — | — | 39 |
| | | 4X-SST | | — | 20.7x14.3 | 18.3x16.7 | 39 |
| | | 4X-plastic (1) | 20x17x12 | — | 21.5x10.1 | | 31 |
| ER_-400 | 400 | 1, 3R, 4, 12 | 36x30x8 | 34.3x28.3 | — | — | 122 |
| | | 4X-SST | | — | 36.7x28.3 | 34.3x30.7 | 122 |
| | | 4X-plastic (1) | 37x32x14 | — | 38x28.9 | — | 103 |
| ER_-600 | 600 | 1, 3R, 4, 12 | 48x36x12 | 46.3x34.3 | — | — | 209 |
| | | 4X-SST | | — | 48.7x34.3 | 46.3x36.7 | 209 |
| | | 4X-plastic (1) | 51x37x 14 | — | 50x28.5 | — | 187 |
| ER_-800 | 800 | 1, 3R, 4, 12 | 48x36x12 | 46.3x34.3 | — | — | 211 |
| | | 4X-SST | | — | 48.7x34.3 | 46.3x36.7 | 211 |
| | | 4X-plastic (1) | 51x37x 14 | — | 50x28.5 | — | 189 |
| ER_-1200 | 1200 | 1, 3R, 4, 12 | 60x36x16 | 58.3x34.3 | — | — | 268 |
| | | 4X-SST | 60x36x16 | — | 60.7x34.3 | 58.3x36.7 | 268 |

1 Enclosures ≤100 A are polycarbonate, flammability rating UL 94-5V A-V0, ≥200 A are fiberglass, flammability rating UL 94-5V.

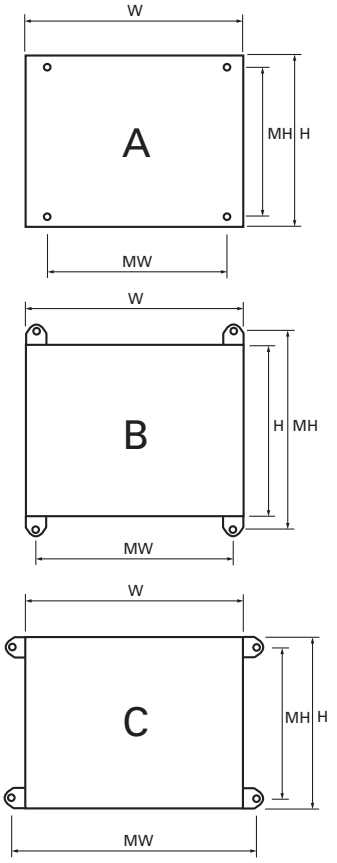


### Available field-installed accessories - order separately

### Auxiliary contacts for 30 to 1200 amp switches.

| Switch amps | Contact type | No. of contacts | Cont. amp rating | Vac | Max. units per switch | Catalog no. |
|---|---|---|---|---|---|---|
| 30-100 | NO + NC | 1 of each | 10 | 240 | 4 | BAC01* |
| | NO | 2 | | | | BAC02* |
| 200-1200 | NO + NC | 1 of each | 10.1 | 125-250 | 2 | BAC03** |
| | NO + NC | 1 of each | | | | BAC04** |
| | NO + NC | 1 of each | 1 | 125 | | BAC11** |
| | NO + NC | 1 of each | | | | BAC12** |

* Two (2) Units per switch max.
**For one auxiliary contact, install either BAC03 or BAC11. For two auxiliary contacts, install BAC03 + BAC04, or BAC11 + BAC12.

### Terminal shrouds for 200 to 800 amp switches

| Switch amps | Poles | Location on switch | Catalog no. |
|---|---|---|---|
| 30-100 | 3 | Lineside and loadside | TSH3-3TB |
| 200 | | Lineside | TSH4-3T |
| | | Loadside | TSH4-3B |
| 400 | | Lineside | TSH5-3T |
| | | Loadside | TSH5-3B |
| 600 | | Lineside or loadside | TSH6-3TB |
| 800-1200 | | | TSH7-3TB |

## UL 508 enclosed non-fused disconnect — 16 to 80 A

### 3-/6-pole UL 508 600 Vac

Catalog number system:

**ER 4X - 63 N 6 P B**

**ER**

Enclosed Rotary disconnect

**NEMA rating**

1, 3R, 4, 4X (304 SST), 4P (4X Plastic), 12

**Amp rating**

16, 25, 40, 63, 80

**N = non-fused**

**Number of poles**

3 = 3-pole, 6 = 6-pole

**Handle type**

S = Selector*, P = Pistol**

**Handle color**

B = Black, R = Red

* 6-Pole switches only, selector handle does not interlock the enclosure door.
**3-pole switches only.

NEMA 1, 3R, 4 and 12

NEMA 4X
304 stainless steel

NEMA 4X

**16-80 A UL 508 non-fused switches**

### Catalog numbers

All catalog numbers provided with a black selector handle. Order red/yellow handle by changing the suffix "B" to "R."

| Amps | Poles | NEMA enclosure and catalog no. | | | | | |
|---|---|---|---|---|---|---|---|
| | | 1 | 3R | 4 | 4X plastic [1] | 4X 304 stainless | 12 |
| 16 | 3 | ER1-16N3PB | ER3R-16N3PB | ER4-16N3PB | ER4P-16N3PB | ER4X-16N3PB | ER12-16N3PB |
| | 6 | ER1-16N6SB | ER3R-16N6SB | ER4-16N6SB | ER4P-16N6SB | ER4X-16N6SB | ER12-16N6SB |
| 25 | 3 | ER1-25N3PB | ER3R-25N3PB | ER4-25N3PB | ER4P-25N3PB | ER4X-25N3PB | ER12-25N3PB |
| | 6 | ER1-25N6SB | ER3R-25N6SB | ER4-25N6SB | ER4P-25N6SB | ER4X-25N6SB | ER12-25N6SB |
| 40 | 3 | ER1-40N3PB | ER3R-40N3PB | ER4-40N3PB | ER4P-40N3PB | ER4X-40N3PB | ER12-40N3PB |
| | 6 | ER1-40N6SB | ER3R-40N6SB | ER4-40N6SB | ER4P-40N6SB | ER4X-40N6SB | ER12-40N6SB |
| 63 | 3 | ER1-63N3PB | ER3R-63N3PB | ER4-63N3PB | ER4P-63N3PB | ER4X-63N3PB | ER12-63N3PB |
| | 6 | ER1-63N6SB | ER3R-63N6SB | ER4-63N6SB | ER4P-63N6SB | ER4X-63N6SB | ER12-63N6SB |
| 80 | 3 | ER1-80N3PB | ER3R-80N3PB | ER4-80N3PB | ER4P-80N3PB | ER4X-80N3PB | ER12-80N3PB |
| | 6 | ER1-80N6SB | ER3R-80N6SB | ER4-80N6SB | ER4P-80N6SB | ER4X-80N6SB | ER12-80N6SB |

1 Polycarbonate enclosure flammability rating UL 94-5V A-V0.

### Switch ratings

For wire types, ranges and terminal torques, see table on page 11-80.

| Amps | Switch catalog no. | Vac | SCCR with max upstream Class J fuse | Max. Hp @ 600 V |
|---|---|---|---|---|
| 16 | RD16-3-508 | 600 | 65 kA /30 A | 10 |
| 25 | RD25-3-508 | | | 20 |
| 40 | RD40-3-508 | | 65 kA /30 A — 10 kA / 60 A | 25 |
| 63 | RD63-3-508 | | 65 kA /60 A — 50 kA / 100 A | 40 |
| 80 | RD80-3-508 | | 50 kA / 100 A | 40 |

Note: Voltage, SCCR and horsepower ratings are the same for 3- and 6-pole switches.

## UL 508 enclosed non-fused disconnect — 16 to 80 A

### Enclosure weights and dimensions

| NEMA enclosure | Poles | Switch amps | H x W x D (in) | Mounting centers h x w (in) A | B | C | Weight (lbs) |
|---|---|---|---|---|---|---|---|
| 1, 3R, 4, 12 | 3 | 16-80 | 8x6x6 | 6.3x4.3 | — | — | 8 |
| | 6 | | 10x8x6 | 8.3x6.3 | — | — | 11 |
| 4X-304 SST | 3 | | 8x6x6 | — | 8.7x4.3 | 6.3x6.7 | 8 |
| | 6 | | 10x8x6 | — | 10.7x6.3 | 8.3x8.7 | 11 |
| 4X-plastic [1] | 3 | 16-63 | 7.4x8.7x5.8 | — | 8x3.6 | 3.6x8 | 4 |
| | | 80 | 9.4x8.7x5.9 | — | 10x3.6 | 5.6x8 | 5 |
| | 6 | 16-8 A | 11.4x10.7x6.3 | — | 12x5.6 | 7.6x10 | 6 |

1 Polycarbonate.

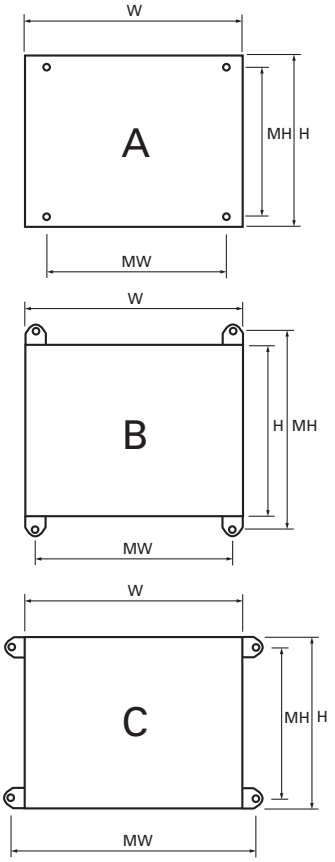


### Available field-installed accessories - order separately

### Auxiliary contacts

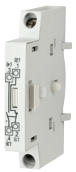

| Contact type | No. of contacts | Cont. amp rating | Vac | Max. units per switch | Catalog no. |
|---|---|---|---|---|---|
| NO + NC | 1 Ea. | 10 | 240 | 2 (1 per side, 4 contacts total) | BAC01 |
| NO | 2 | | | | BAC02 |

Auxiliary contact configurations

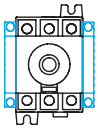

### Terminal shrouds

Includes terminal shroud for both lineside and loadside.

| Switch amps | Poles | Location on switch | Catalog no. |
|---|---|---|---|
| 16-40 | 3 | Lineside and loadside | TSH1-3TB |
| 63-80 | | | TSH2-3TB |

### Switched 4th pole

Converts 3-pole switch to 4-pole switch.

| Switch amps | Catalog no. |
|---|---|
| 16 | POLE-16 |
| 25 | POLE-25 |
| 40 | POLE-40 |