THIS DRAWING IS UNPUBLISHED. RELEASED FOR PUBLICATION -,- .
© COPYRIGHT - BY TYCO ELECTRONICS CORPORATION. ALL RIGHTS RESERVED.

LOC	DIST
HC	00

REVISIONS

P	LTR	DESCRIPTION	DATE	DWN	APVD
	A1	REVISED PER ECO 06-006127	01JUN06	GB	JH

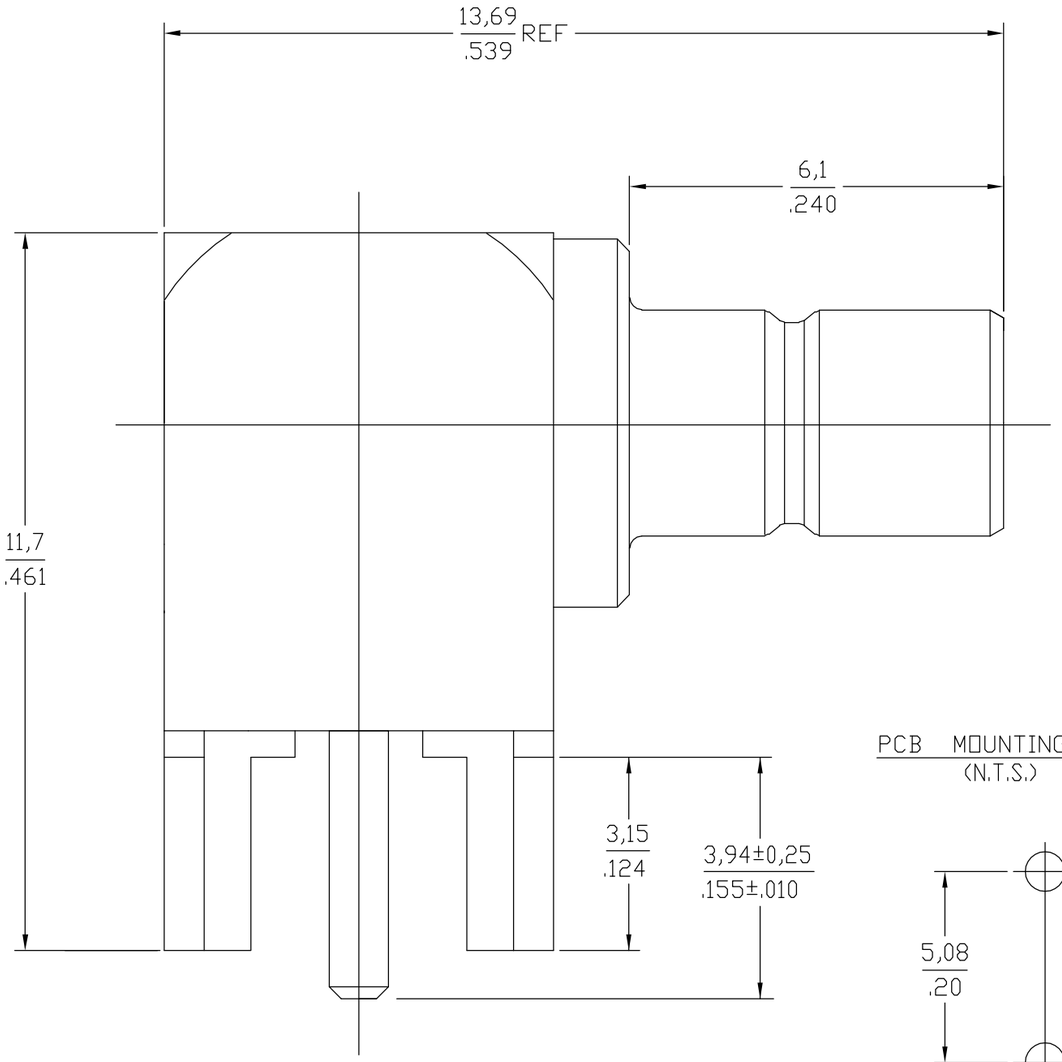

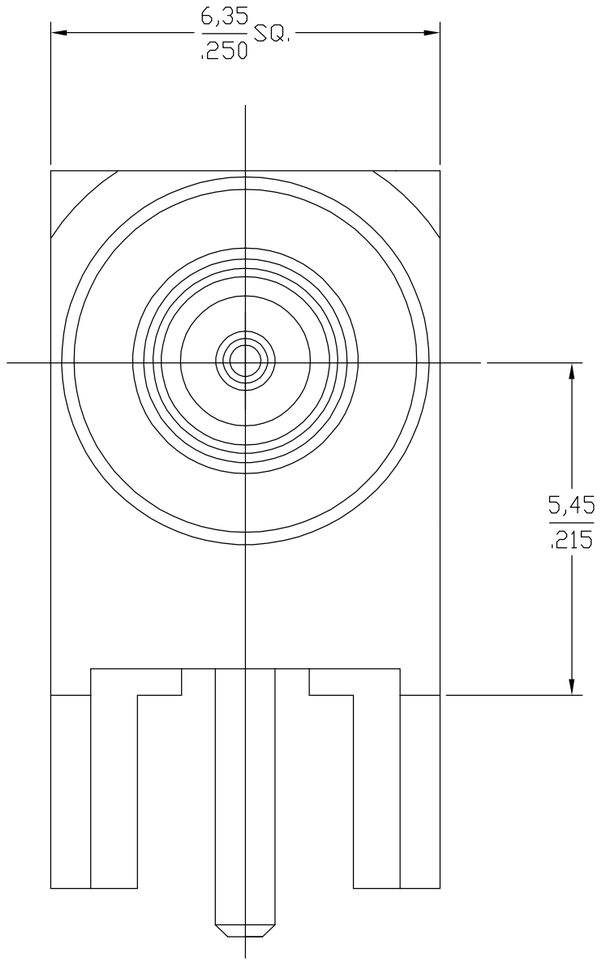

PCB MOUNTING DETAIL
(N.T.S.)

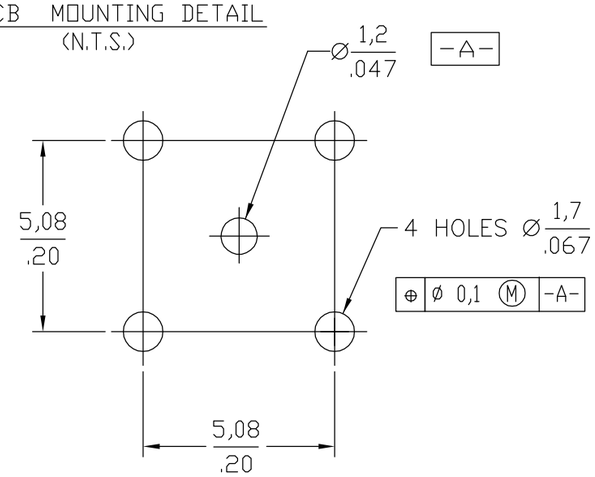

1310852-1

PART #

CAP JACK HOUSING EXTRA HOUSING MALE CONTACTS	BRASS PER ASTM B 16, 1/2 HD	GOLD PLATE PER ASTM B 488
DIELECTRICS	TEFLON PER ASTM D 1710	N/A
COMPONENT	MATERIAL	FINISH

THIS DRAWING IS A CONTROLLED DOCUMENT.

DIMENSIONS: mm [INCHES]

TOLERANCES UNLESS OTHERWISE SPECIFIED:

0 PLC	± -
1 PLC	± -
2 PLC	± -
3 PLC	± 0.127 [.005]
4 PLC	± -
ANGLES	± 1°0'

MATERIAL -

FINISH -

DWN	CAM	8/22/85
CHK	CAM	8/22/85
APVD	CAM	8/22/85
PRODUCT SPEC	—	
APPLICATION SPEC	—	
WEIGHT	—	

CUSTOMER DRAWING

tyco Electronics

Tyco Electronics Corporation
Harrisburg, PA 17105-3608

NAME 'SMB' PCB RIGHT ANGLE SOCKET (B65N10G999X)
—

SIZE	CAGE CODE	DRAWING NO	RESTRICTED TO
A3	00779	C-1310852	—

SCALE	SHEET	REV
10:1	1 OF 1	A1