THIS DRAWING IS UNPUBLISHED.
DIFFUSION RESTREINTE

RELEASED FOR PUBLICATION 20
LIBRE A LA DIFFUSION

© COPYRIGHT 20 BY -
ALL RIGHTS RESERVED.
TOUS DROITS RESERVES

REVISIONS

P	LTR	DESCRIPTION MODIFICATIONS	DATE	DWN DESS.	APVD APP.
	B	ADDED VERSION WITHOUT STAMP	22APR2005	MP	XR
	C	953119-1 was 1-953119-1 and 953119-2 was 1-953119-2	10MAY2007	MP	XR
	D	DIMENSION 16 +/-0.2 WAS 16 0/-0.1	05NOV2010	EC	XR
	D1	CORRECTED PN IN NOTE IN ZONE A3	20JUL2016	KCD	SA

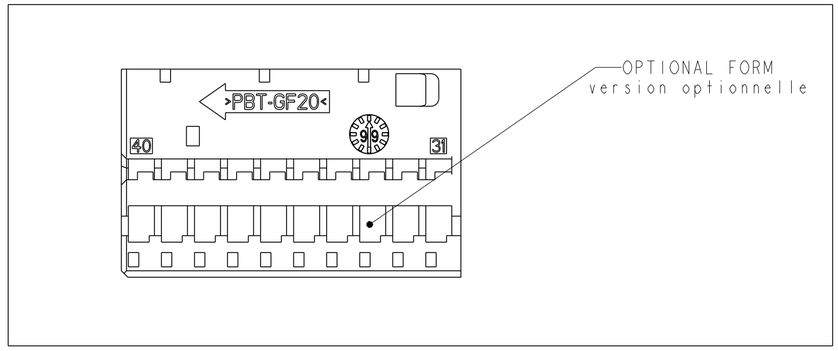

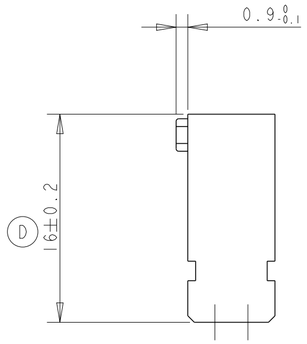

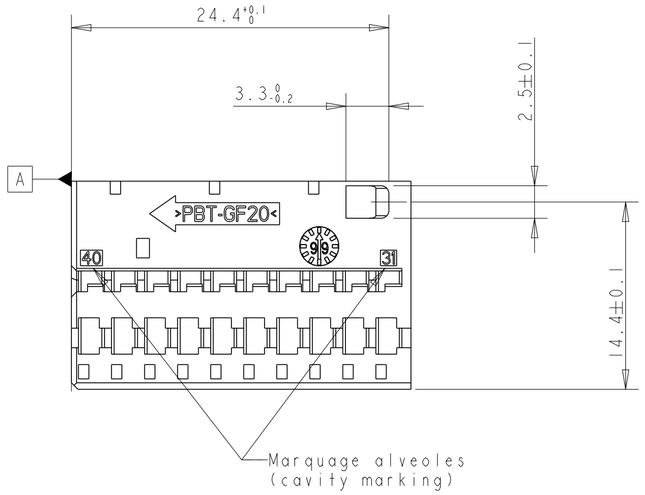

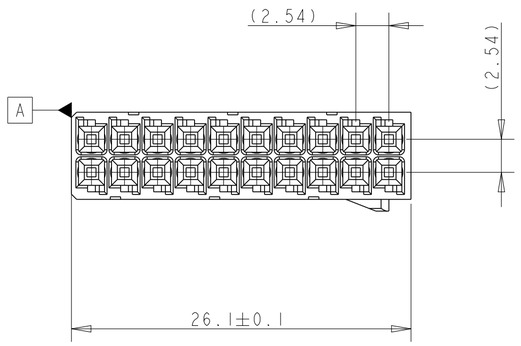

1-953119-4	PBT 20% FV	BLANC (white)	DE 1 A 20	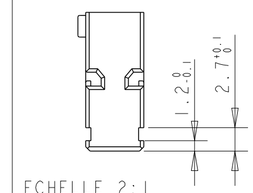
1-953119-3	PBT 20% FV	NOIR (black)	DE 21 A 40	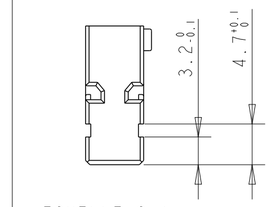
953119-1	PBT 20% FV	VERT (green)	DE 21 A 40	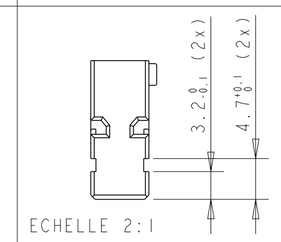
953119-2	PBT 20% FV	MARRON (brown)	DE 1 A 20	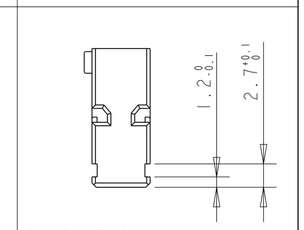
REFERENCE TE (P/N TE)	MATIERE (material)	COULEUR (color)	Marquage alveoles (cavity marking)	DETROMPAGE (coding)

953119-1 as shown

Notes:
Pièces à utiliser avec :
-porte module 40 voies MQS ref 953122-x
-clips MQS ref 144969-x

To use with:
-shield 953122-x
-contact MQS 144969-x

THIS DRAWING IS A CONTROLLED DOCUMENT.
CE PLAN EST UN DOCUMENT CONTROLE PAR TYCO ELECTRONICS. IL EST SUSCEPTIBLE D'ETRE REVISE. CONTACTER LE SERVICE TECHNIQUE DE TYCO ELECTRONICS POUR OBTENIR LA DERNIERE REVISION.

DIMENSIONS: mm

TOLERANCES UNLESS OTHERWISE SPECIFIED: TOLERANCES NON SPECIFIEES
(SEPT. NB DE DECIMALES)
1 PLC DEC ±
2 PLC DEC ±
3 PLC DEC ±
4 PLC DEC ±
5 PLC DEC ±
ANGLES ±5°

MATERIAL/MATIERE - -
FINISH/FINITION - -

DWN /DESSINE B. R NOV2003
CHK /VERIFIE J.Daher NOV2003
APVD /APROUVE JJ. REVIL NOV2003
PRODUCT SPEC SPEC. PRODUIT 108-15178
APPLICATION SPEC SPEC. APPLICATION -
WEIGHT MASSE APPROX. 1.8 gr

TE Connectivity

NAME TITRE MODULE 20 VOIES MQS
Receptacle housing 20 way MQS
-

SIZE FORMAT A2 | CAGE CODE 00779 | DRAWING NO No PLAN C-953119 | RESTRICTED TO RESERVE A -

CUSTOMER DRAWING /PLAN CLIENT UNIQUEMENT POUR REFERENCE | SCALE ECHELLE 4:1 | SHEET FEUILLE 1 OF DE 1 | REV D1

1471-9 (3/13)