Honeywell

# LIMIT SWITCH

CATALOGUE LISTING
**GLS**

CHART NO.
**MTG-GL-180**

**MTG-GL-180**

REPLACES

DRAWING NUMBER A018-38

ISSUE 10

RELEASE NUMBER

| REVISIONS | |
|---|---|
| 5 | 9/96 |
| A018-276 | |
| 6 | 12/96 |
| A018-293 | |
| 7 | 7/97 |
| CO-00008 | |
| 8 | 8/97 |
| CO-000106 | |
| 9 | CO/395 |
| IW | 6/98 |
| 10 | CO/769 |
| IW | 12/98 |

## FIG. 1

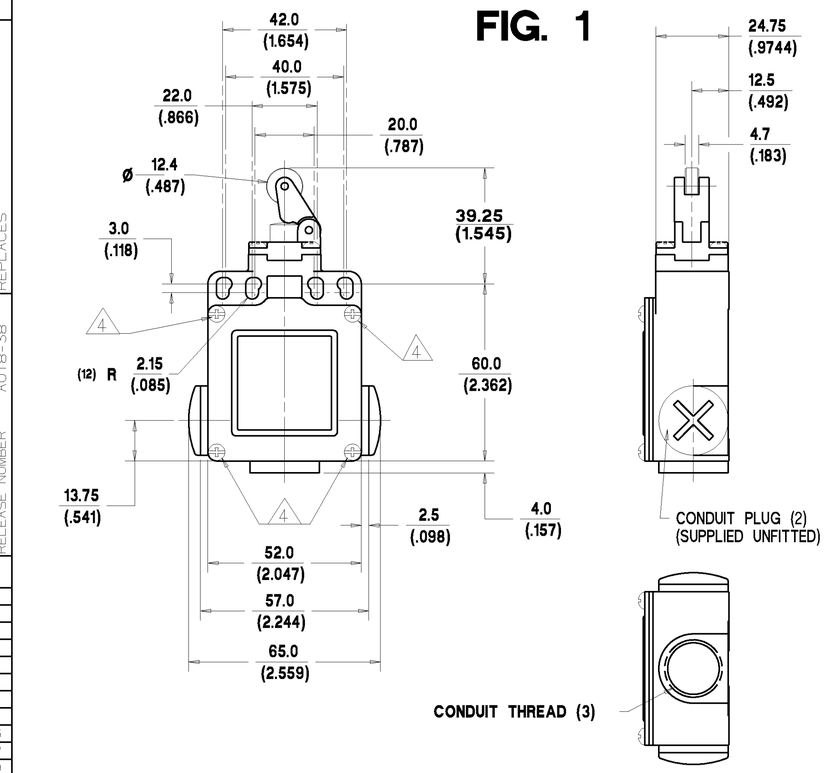


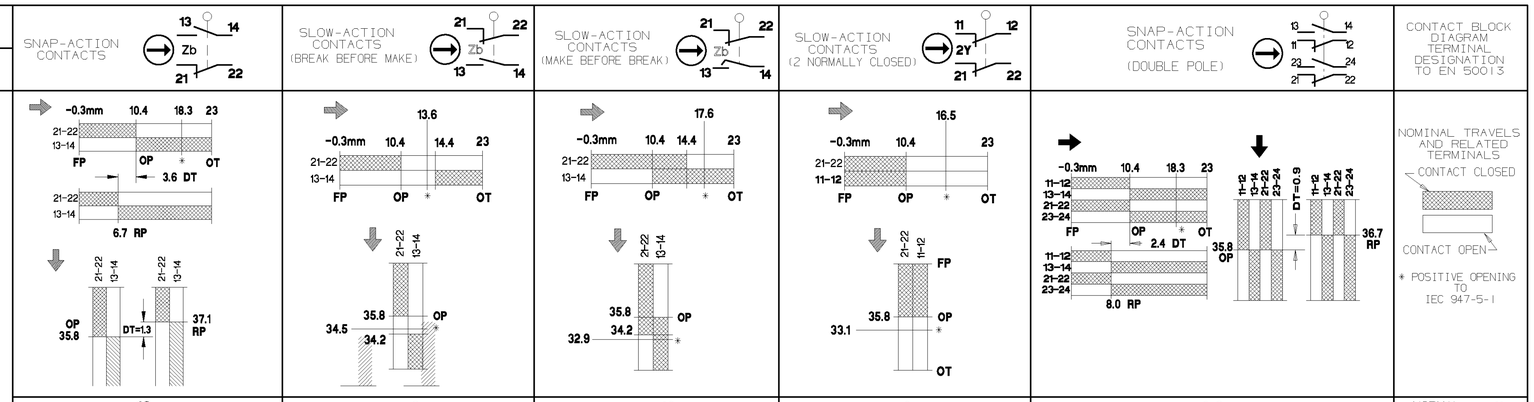


| | | | | |
|---|---|---|---|---|
| 01 OR 07 | 03 OR 33 | 04 OR 34 | 06 OR 36 | 24 OR 32 |
| | | | | 24 — BASIC SWITCH WITH SILVER CONTACTS |
| | | | | 32 — BASIC SWITCH WITH GOLD PLATED CONTACTS. |

BASIC SWITCH

TOP ROLLER ARM ACTUATOR (SEE FIG. 1)

CONDUIT THREAD (SEE FIGS. 1 & 2)

ROLLER ORIENTATION (SEE FIG. 3)

EN50047 BODY TYPE 3 CONDUIT ENTRY (SEE FIG. 1)

MODIFICATION CODE

| GLE | X | XX | D | – | X | XXXX |
|---|---|---|---|---|---|---|

1/2" NPT X 14 CONDUIT THREAD ADAPTER — A

PG 13.5 CONDUIT THREAD — B

M20 X 1.5 CONDUIT THREAD — C

PF 1/2 CONDUIT THREAD — D

01, 03, 04, 06, 07, 24, 32, 33, 34, 36

4 — C021

CABLE 5 WIRE, WITH GROUND. LAST CHARACTER IS CABLE LENGTH 1 = 1MTR. CABLE LENGTHS ARE FROM 1 TO 9 METRES. ONLY AVAILABLE WITH CONDUIT THREAD TYPE 'B' .

Q01 — CONNECTOR , 4 PIN MICRO. ONLY AVAILABLE WITH CONDUIT THREAD TYPE 'B' .

Q02 — CONNECTOR , 5 PIN MICRO TWIN KEYWAY. ONLY AVAILABLE WITH CONDUIT THREAD TYPE 'B' .

Q03 — CONNECTOR , 4 PIN MINI. ONLY AVAILABLE WITH CONDUIT THREAD TYPE 'B' .

Q04 — CONNECTOR , 5 PIN MINI. ONLY AVAILABLE WITH CONDUIT THREAD TYPE 'B' .

Q07 — CONNECTOR , 5 PIN MICRO. ONLY AVAILABLE WITH CONDUIT THREAD TYPE 'B' .

NOTE:-
ANY STANDARD LISTING WITH SUFFIX 'RS' OR 'FE' IS PERMITTED.

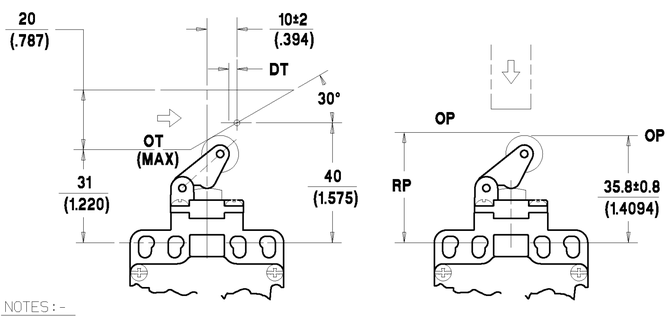


NOTES:-

1. ZINC DIECAST BODY AND HEAD WITH STEEL COVER. BODY AND COVER FINISHED IN MICRO SWITCH BLUE EPOXY PAINT. HEAD FINISHED IN BLACK EPOXY PAINT.
2. MINIMUM OPERATING VELOCITY (Vmin) = 1.0 MM/S
   MAXIMUM OPERATING VELOCITY (Vmax) = 100 MM/S
   MAXIMUM OPERATING FREQUENCY (Fmax) = 250 OPS/MIN
   (THESE LIMITS APPLY TO LINEAR OPERATION AS SHOWN IN THE ABOVE DIAGRAMS ONLY)
3. FREE POSITION (FP), OPERATING POINT (OP), OVERTRAVEL (OT) AND PRETRAVEL (PT) ALL TO EN50047.

4 MAXIMUM TIGHTENING TORQUE FOR FIXING SCREW = 0.5Nm (4.4in.LB)

*NO CHANGES CAN BE MADE TO THIS DRAWING WITHOUT JOINT NEWHOUSE/FREEPORT APPROVAL*

## FIG. 2

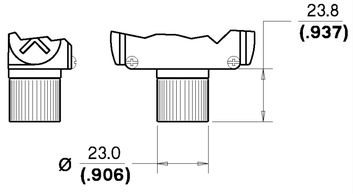


1/2" NPT X 14 CONDUIT THREAD ADAPTER **A**

## FIG. 3

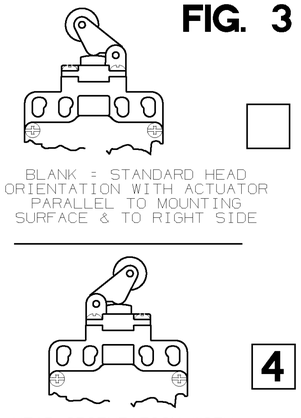

BLANK = STANDARD HEAD ORIENTATION WITH ACTUATOR PARALLEL TO MOUNTING SURFACE & TO RIGHT SIDE

**4** — HEAD ORIENTATION WITH ACTUATOR PARALLEL TO MOUNTING SURFACE AND TO LEFT SIDE

NOTE:
FOR CONNECTION DIAGRAMS AND ADDITIONAL ELECTRICAL, ENVIRONMENTAL & DIMENSIONAL INFORMATION SEE DRAWING GL-49212.

NOTE:- CABLE AND CONNECTOR WILL BE FITTED TO BOTTOM EXIT CONDUIT ONLY. OTHER OPTIONS CUSTOMER SPECIAL'N' LISTING.

| STANDARD SILVER CONTACTS | | GOLD PLATED CONTACTS | ENVIRONMENTAL | APPROVALS |
|---|---|---|---|---|
| ELECTRICAL RATING | | ELECTRICAL RATING | | |
| AC | DC | | | |
| A300 AC15 Ue Ie | Q300 DC13 Ue Ie | $I_{th}$ = 10A | IP66 NEMA 1,4,12,13 | UL |
| VOLTS AMPS | VOLTS AMPS | 1V 10μA MIN. | TEMP RANGE : -25°C TO 85°C / -13°F TO 185°F | CSA |
| 120 6 | 125 0.55 | 50V 100mA MAX. | STORAGE : -40°C TO 85°C / -40°F TO 185°F | IEC 947-5-1 |
| 240 3 | 250 0.27 | | SHOCK : 50G PER IEC 68-2-27 | EN50047 |
| | | | VIBRATION : 10G PER IEC 68-2-6 | |

| | | | |
|---|---|---|---|
| DRAWN | M. LOCH | 3/93 | |
| CHECK | I. WEIR | 3/93 | |
| DESIGN | J. BOYD | 3/93 | |
| AUTHOR'N | P. TRICKETT | 3/93 | |

THE COPYRIGHT OF THIS DRAWING IS THE PROPERTY OF HONEYWELL LTD. THE DRAWING IS SUPPLIED IN CONFIDENCE AND MUST NOT BE USED FOR ANY PURPOSE OTHER THAN THAT FOR WHICH IT IS SUPPLIED.

THIRD ANGLE PROJECTION | SCALE 1:1 | DIMENSIONS ARE IN MM/INCHES. | MODIFY ON CAD SYSTEM ONLY