MICRO SWITCH
a Honeywell Division
FED. MFG. CODE 91929

SWITCH – ENCLOSED

CATALOG LISTING
BZE6–2RN1809–5

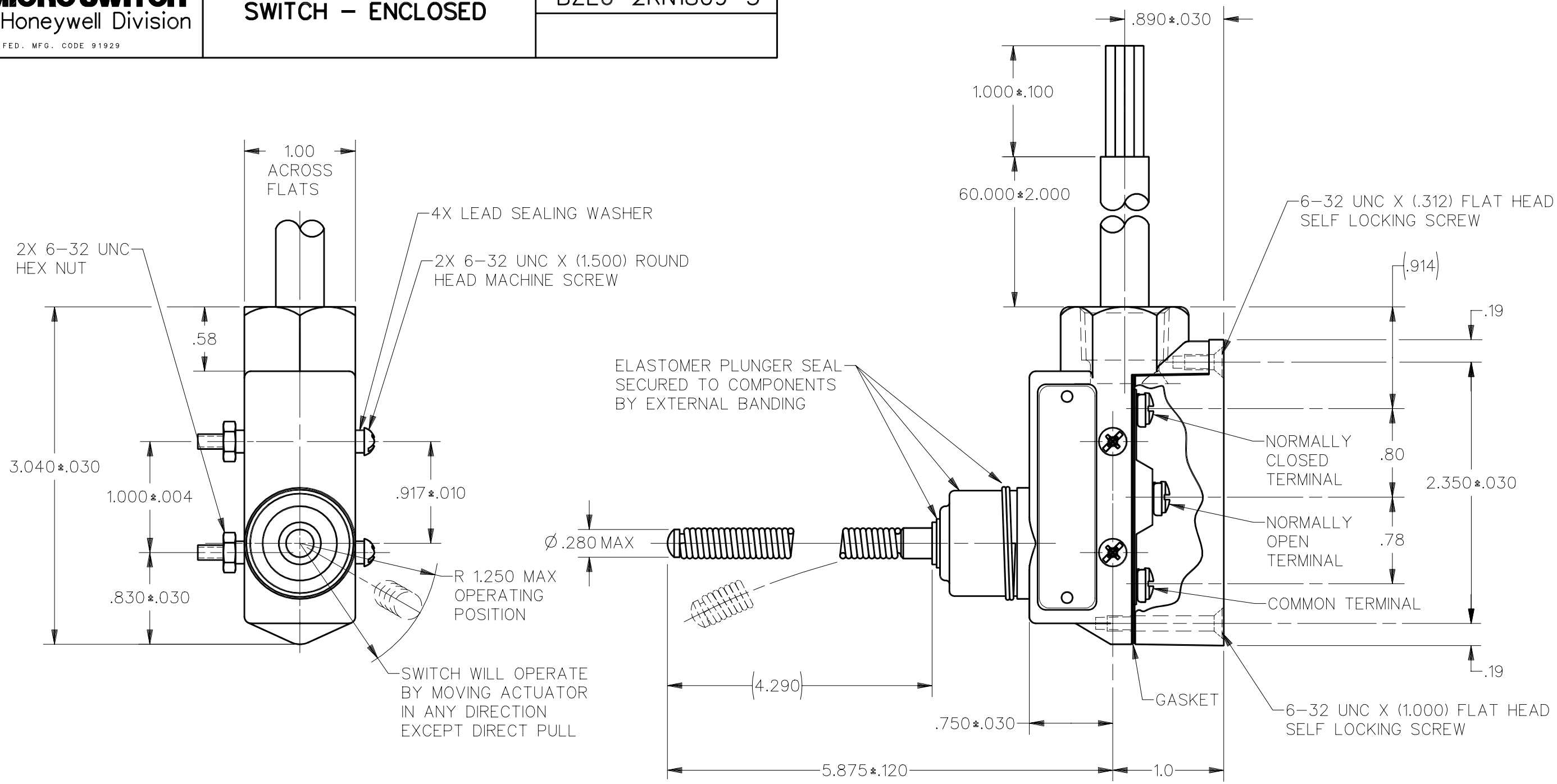

NOTE
1 – CONDUIT OPENING POTTED
2 – WIRING CONNECTIONS
BLACK LEAD-----COMMON
WHITE LEAD-----NORMALLY OPEN
RED LEAD-------NORMALLY CLOSED
GREEN LEAD-----GROUND

THIS DRAWING COVERS A PROPRIETARY ITEM AND IS THE PROPERTY OF MICRO SWITCH. A DIVISION OF HONEYWELL. THIS DRAWING IS NOT TO BE COPIED OR USED WITHOUT THE APPROVAL OF MICRO SWITCH

THIRD ANGLE PROJECTION

SCALE FULL

DO NOT SCALE PRINT

CHARACTERISTICS

OPERATING FORCE — — — — — 7 OZ MAX
OPERATING POSITION — — — — — 15° MAX
SWITCH – BASIC REPLACEMENT --- BZ–2R–A2

ELECTRICAL DATA

CONTACT ARRANGEMENT
S P D T

10A 125, 250 OR 480 VAC
2A 600 VAC
1/8HP 125 VAC, 1/4HP 250 VAC
1/2A 125 VDC, 1/4A 250 VDC

UNLESS OTHERWISE SPECIFIED TOLERANCES ARE

ONE PLACE	(.0)	±.030
TWO PLACE	(.00)	±.015
THREE PLACE	(.000)	±.005
ANGLES		±

WEIGHT

ANSI Y14.5M–1982 APPLIES

CATALOG LISTING BZE6–2RN1809–5
RELEASE NO. PR–19289
REPLACES
ISSUE 4
CHECK
REVISIONS
A CO–73655 S M 22 APR 93
B CO 75965 TSM 20 AUG 93
C CO–77179A K D R 18 FEB 94
CHECK
CHECK
DRAWN MAM 19 JUN 91
DDM/CAD