© COPYRIGHT BY HOKUYO AUTOMATIC CO., LTD., JAPAN
THIS DOCUMENT IS THE PROPERTY OF HOKUYO AUTOMATIC CO., LTD. IT IS LOANED SUBJECT TO THE UNDERSTANDING THAT IT SHALL NOT BE REPRODUCED, COPIED, OR MADE AVAILABLE TO ANY THIRD PARTY WITHOUT THE PRIOR WRITTEN CONSENT OF HOKUYO AUTOMATIC CO., LTD.

TECHNICAL DATA			TEST SPECI.	TEST RESL
POWER SUPPLY				
SUPPLY VOLTAGE	[V]	24.5 to 28.5	ATP-ZS-00380-02	a
RIPPLE	[mV rms]	≤50, 10Hz to 200kHz	RTCA/DO-160C, 18.4.1	d
SUPPLY CURRENT	[mA rms]	typ.≤14.0, typ.≤12.5	ATP-ZS-00380-02	a
SENSING CHARACTERISTICS				
SENSOR INPUT		compatible with sensors to analog specs. IEC-61326-32, IEC-61326-33 and IEC-61326-34	OTP-ZS-00380-02	c
RESPONSE TIME, SENSING	[ms]	≤25	OTP-ZS-00380-01	d
RESPONSE TIME, FAILURE DETECTION & BITE	[ms]	≤100	OTP-ZS-00380-01	d
INPUT CHARACTERISTICS				
ON-STATE BITE INPUT VOLTAGE	[V]	4.0 to 16	ATP-ZS-00380-02	d
OFF-STATE BITE INPUT VOLTAGE	[V]	≤0.8	ATP-ZS-00380-02	d
OUTPUT CHARACTERISTICS				
OUTPUT TYPE, OUT		NO, current sinking, open collector	–	–
OUTPUT TYPE, STA		NO, current sinking, open collector	–	–
ON-STATE OUTPUT VOLTAGE	[V]	≤0.8	ATP-ZS-00380-02	a,b
OFF-STATE LEAKAGE CURRENT	[μA]	≤100	ATP-ZS-00380-02	a,b
ANALOGUE OUTPUT VOLTAGE	[V]	+2.0	OTP-ZS-00380-01	d
LOAD CURRENT	[mA]	≤10	ATP-ZS-00380-02	a,b
ANALOGUE OUTPUT	[V]	0.035 to 2.500	ATP-ZS-00380-02	a,b
ENVIRONMENTAL CHARACTERISTICS				
OPERATING TEMPERATURE	[°C]	−40 to +85	RTCA/DO-160C, 4.5	b
SURVIVAL TEMPERATURE	[°C]	−55 to +100	RTCA/DO-160C, 4.0	d
TEMPERATURE VARIATION		category B	RTCA/DO-160C, 5.3	d
ALTITUDE	[ft]	−1000 to +70000	RTCA/DO-160C, 4.6	d
HUMIDITY		category B	RTCA/DO-160C, 6.3.2	d
SHOCK		40g @ 9ms	MIL-STD-810D, 516.3-1	d
VIBRATION		category Y/Z	RTCA/DO-160C, 8.1/8.2	d
EMC-REQUIREMENTS				
INDUCED SIGNAL SUSCEPTIBILITY:				
-MAGNETIC FIELDS, EQUIPMENT		category Z	RTCA/DO-160C, 19.3.1	d
-MAGNETIC FIELDS, SENSOR INPUT		category Z	RTCA/DO-160C, 19.3.2	d
-ELECTRIC FIELDS, SENSOR INPUT		category Z	RTCA/DO-160C, 19.3.3	d
-SPIKES, SENSOR INPUT		500 mA noisy	DO-160D-4, 7.3.2	d
RF SUSCEPTIBILITY				
-CONDUCTED, SENSOR INPUT		category Y	RTCA/DO-160C, 20.4	d
-CONDUCTED, SIGNAL INPUTS		category U	RTCA/DO-160C, 20.4	d
-CONDUCTED, SIGNAL OUTPUTS		category T	RTCA/DO-160C, 20.4	d
-RADIATED, CW/AM, SENSOR INPUT		category Y	RTCA/DO-160C, 20.5	d
-RADIATED PULSED, SENSOR INPUT		200V/m, 200Hz-18GHz	OTP-ZS-00380-01	d
-RADIATED, HIRF, SENSOR INPUT		20-200V/m, 100Hz-18GHz	OTP-ZS-00380-01	d
EMISSIONS				
-RF EMISSION, CARRIERS COUPLING		≤300mV/ppk, 30Hz-150MHz	OTP-ZS-00380-01	d
-RF EMISSION, INDUCTIVE COUPLING		54dBmV/ppk, 30Hz-150MHz	OTP-ZS-00380-01	d
-RF EMISSION, CONDUCTED		category M2	RTCA/DO-160C, 21.3	d
-RF EMISSION, RADIATED		FAR, 8.4-6, 8.4-7	DO-160D-4, 8.4.2	d
DURING INDUCED TRANSIENT SUSCEPTIBILITY				
-SENSOR INPUT		LEVEL L2 (DS4)	DO-160D-4, 7.4.1 (2.5)	d
-SIGNAL INPUTS		category A2,3	RTCA/DO-160C, 22.5	d
-SIGNAL OUTPUTS		category A1C1	RTCA/DO-160C, 22.6	d
RELIABILITY				
MTBF	[hrs]	≥435000 @ Ambient Temp.=40°C	MIL-HDBK-217 F	–

a = 100% TEST AT ROOM TEMPERATURE
b = 100% BASIC FUNCTION TEST AT TEMPERATURE EXTREMES
c = TYPE APPROVAL TEST
d = IN SERVICE

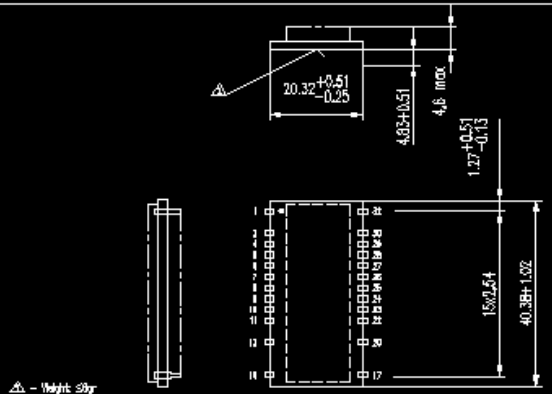

⚠ – Weight: 30gr
⚠ – IDENTIFICATION MARKING
ZS-00380-02 [YW W] S/N [XXX XXX]
DATE CODE
WEEK
YEAR
SIX DIGIT SERIAL NUMBER

PIN ALLOCATION

No.	Name	Function	No.	Name	Function
1	AR	SENSOR INPUT, REFERENCE	17	GND	SENSOR & POWER SUPPLY GROUND
2	–	CUTTED PIN	18	–	CUTTED PIN
3	TP1	ONLY FOR INTERNAL TEST PURPOSE	19	–	CUTTED PIN
4	TP2	ONLY FOR INTERNAL TEST PURPOSE	20	INA	INPUT, SENSING
5	V_{EE}	NEGATIVE SUPPLY VOLTAGE	21	–	CUTTED PIN
6	–	NC	22	NEAR	INPUT FOR TARGET NEAR SIMULATION
7	–	NC	23	V_{DD}	POSITIVE SUPPLY VOLTAGE
8	–	NC	24	TP4	ONLY FOR INTERNAL TEST PURPOSE
9	–	NC	25	TP5	ONLY FOR INTERNAL TEST PURPOSE
10	TP3	ONLY FOR INTERNAL TEST PURPOSE	26	ANA	ANALOGUE VOLTAGE OUTPUT
11	FAR	INPUT FOR TARGET FAR SIMULATION	27	STA	FAILURE INDICATION OUTPUT
12	–	CUTTED PIN	28	AGND	SIGNAL GROUND
13	INB	INPUT, REFERENCE	29	OUT	SENSOR OUTPUT
14	–	CUTTED PIN	30	DGND	DIGITAL GROUND
15	–	CUTTED PIN	31	–	CUTTED PIN
16	GND	SENSOR & POWER SUPPLY GROUND	32	AA	SENSOR INPUT, SENSING

Unless stated Tolerance Statement after DIN 7168 middle

					Date	Name
				Proc.	13/03/07	Bauer
				Eval.		
				QS		
B	248/97	Wiener	03.03.97			
A	811/95	Wiener	07.11.95			
Ind.	Änderungen	Name	Datum			

Hokuyo Automatic Co.,Ltd. Central Development Division Sensor Development Department

File No.: 43400140 | RELEASE " E "

SENSOR INTERF. MODULE
ZS-00380-02

A

43400140-001

Page 1 / 1 Pg.

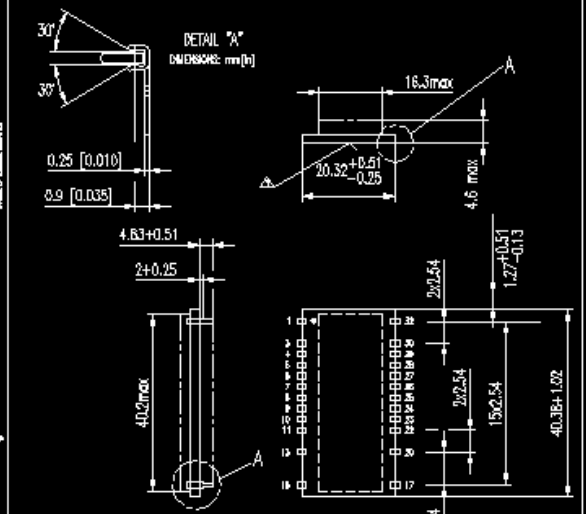

⚠ – Weight: 30gr
⚠ – IDENTIFICATION MARKING
ZS-00380-02 [YW W] S/N [XXX XXX]
DATE CODE
WEEK
YEAR
SIX DIGIT SERIAL NUMBER
⚠ – ALL PINS DIP-SOLDERD
SOLDER MATERIAL: 63Sn/36Pb/2Ag
⚠ – TRANSPORT PACKAGING:
12 PCS MAX PER ESD SAFE SHIPPING BOX

Unless stated Tolerance Statement after DIN 7168 middle

					Date	Name
				Proc.	13/03/07	Bauer
				Eval.		
				QS		
A	184/97	Wiener	20.03.97			
Ind.	Änderungen	Name	Datum			

Hokuyo Automatic Co.,Ltd. Central Development Division Sensor Development Department

File No.: 43400140 | RELEASE " E "

OUTLINE DIMENSIONS

SENSOR INTERF. MODULE
ZS-00380-02

A

43400140-002

Page 1 / 1 Pg.