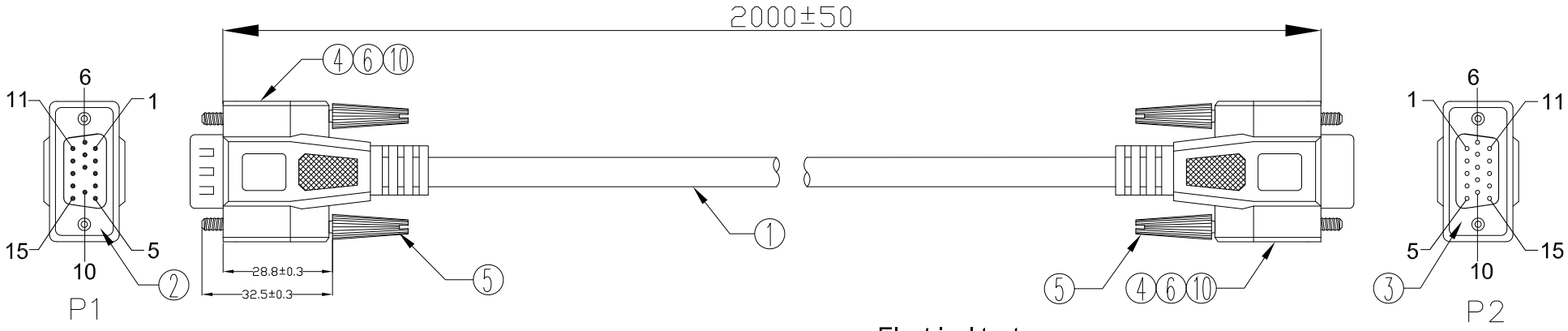

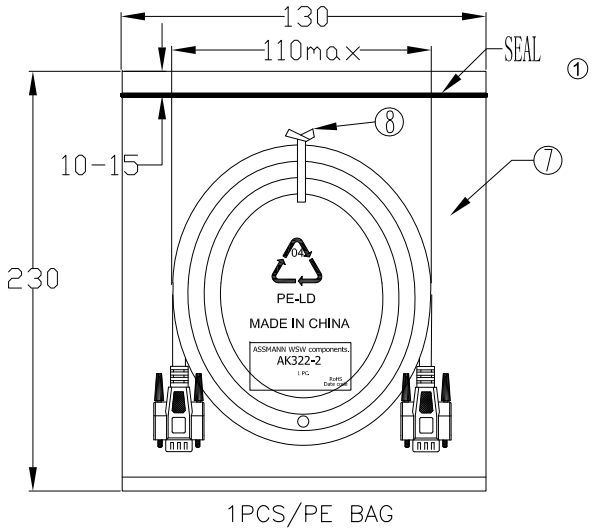

PIN ASSIGNMENT

P1	P2
1	1
2	2
3	3
4	4
5	5
6	6
7	7
8	8
10	10
11	11
12	12
13	13
14	14
15	15
Shell	Shell

Electrical test:

1. 100% short,open,miss wire test
2. Conduct resistance:3 Ohm(max)
3. Insulation resistance:5 Mohm(min)
4. Dielectric test:DC 300V/10ms

NO.	NAME	Q'TY	SPECIFICATION
⑩	TUBE	2	HEAT SHRINK TUBE BLACK OD1.5*L=15MM
⑨	PE BAG	1/10	CLEAR SIZE:280*330*0.05mm PRINT BLACK"MADE IN CHINA"+"10PCS"
⑧	TIE	1	WHITE L=120mm
⑦	PE BAG	1	CLEAR SIZE:130*230*0.05mm PRINT BLACK"MADE IN CHINA"+"1PC"
⑥	COPPER FOIL	2	DOUBLE-SIDED CONDUCTIVE COPPER FOIL 18U" W25mm*L55mm
⑤	SCREW	4	SCREW:#4-40UNC L47mm,NICKEL PLATED,INSULATION COLOR BEIGE(IV-29)
④	OUT JACKET	43.5g	BEIGE(IV-29) 40P PVC(MOULD NO:WM-113)
	IN JACKET	8g	CLEAR LDPE(MOULD NO:NM-049)
③	CONN	1	HDD15P FEMALE,PIN G/F.SHELL-NICKEL,INSULATION COLOR:BLUE. SOLDER TYPE.
②	CONN	1	HDD15P MALE,PIN G/F.SHELL-NICKEL,INSULATION COLOR:BLUE. MISSING 9PIN SOLDER TYPE.
①	CABLE	1	NOUL 28AWG(7/0.12TC)*14C+AL/MY+D.W(7/0.12 TC) OUTTER JACKET COROL:BEIGE(IV-29) OD:6.0±0.15mm. L=2000±20mm.

RoHS compliant

Unit: mm

Scale	Free					Date	Name	Customer-No.
TOLERANCE					Drawn	20.02.2017	Amy	
					Approved	04.09.2017	Fred	ASSMANN WSW-No. AK322-2
DIM	TOL	①	Delete the wire color for pin assignment	04.09.2017	Fred			Drawing-No. ASS 7878 CA
		⓪	Drawn	20.02.2017	Amy			rev01
Angle	TOL	Id.	Modification	Date	Name			Replace / Sheet

ASSMANN WSW components