CASE FINISH	CURRENT (AMPS)	WORKING VOLTAGE				MAXIMUM DC RESISTANCE (OHMS)	MAXIMUM VOLTAGE DROP		MINIMUM CAPACITANCE (uF)	MIN. INSERTION LOSS PER MIL-STD-220, FULL LOAD, +25°C												
		-55°C TO +85°C		-55°C TO +125°C																		
		AC	DC	AC	DC		DC	AC		14 KHz	30 KHz	50 KHz	75 KHz	100 KHz	150 KHz	300 KHz	500 KHz	1 MHz	10 MHz	100 MHz	1 GHz	2 GHz
SOLDER	1.0	125	150	125	150	2.5	.20	.25	---	--	--	--	--	--	13	24	--	45	80	--	70	70

PART MARKING:

M15733/26-0003
L OLSP2 DATE CODE
125VAC 1A
400HZ 125°C 150VDC
51-353-077

PACKAGE MARKING
STANDARD

MARKING NOTES:
N/A

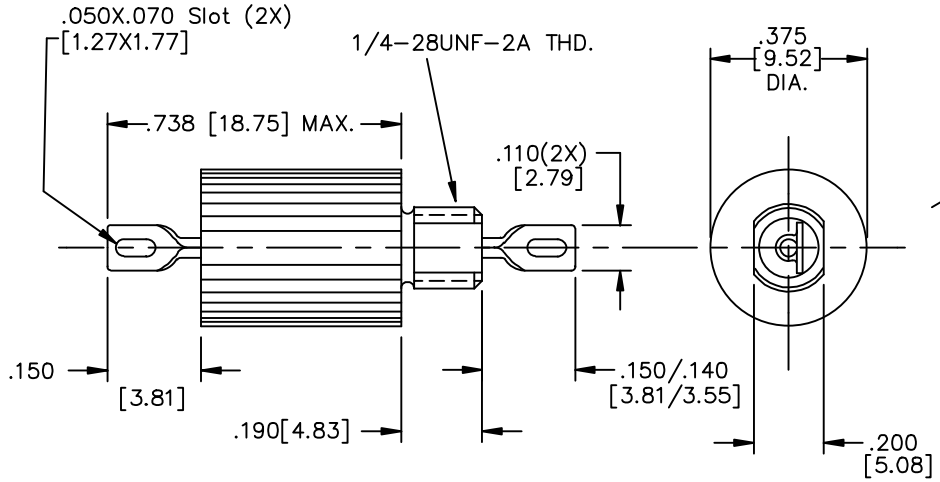

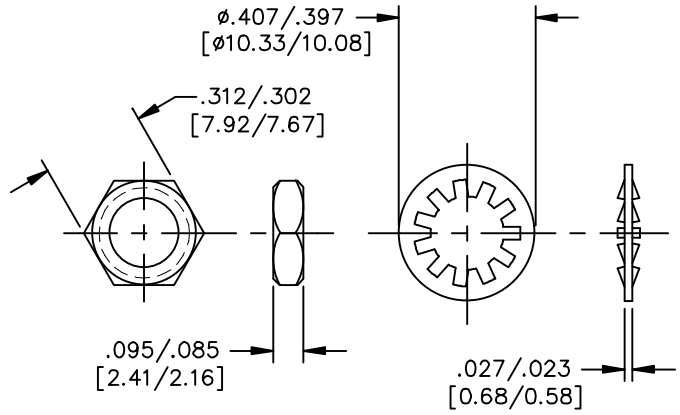

MTG. HARDWARE

SCHEMATIC

22 THIS PART IS CODED "NCA". SPECTRUM CONTROL, INC. DOES NOT HAVE CHANGE AUTHORITY. CUSTOMER APPROVAL REQUIRED BEFORE PRODUCT/PROCESS CHANGES CAN BE MADE.

NOTES:
1) MOUNTING TORQUE NOT TO EXCEED 7in-lbs.

REV. NO.	CHANGE NOTICE
22	CN 59169-ENG
21	CN 38679-ENG
20	CN 32312-CPD
19	CN 186914
18	CN 182331

UNLESS OTHERWISE SPECIFIED DIMENSIONS ARE IN INCHES [MILLIMETERS]
DO NOT SCALE
THIRD ANGLE PROJECTION

TOLERANCES UNLESS OTHERWISE SPECIFIED
Fractions ±
Dec. .xx±
Dec. .xxx± .010
Angles ±0° 30'
CODE IDENT. NO. OLSP2

SPECTRUM CONTROL INC.
FAIRVIEW PENNSYLVANIA
Dwn. SLAGLE
Date 12-11-07
Engr. J.Kraus
Sheet 1 of 1
Description Low Pass EMI Filter
51-353-077

Quality Products From The Specialists In Electro-Magnetic Compatibility