THIS DRAWING IS UNPUBLISHED. RELEASED FOR PUBLICATION -,- .
© COPYRIGHT - By - ALL RIGHTS RESERVED.

| LOC | DIST |
|---|---|
| GP | 00 |

REVISIONS

| P | LTR | DESCRIPTION | DATE | DWN | APVD |
|---|---|---|---|---|---|
| | B1 | REVISED PER ECO-11-005033 | 28MAR11 | RK | HMR |

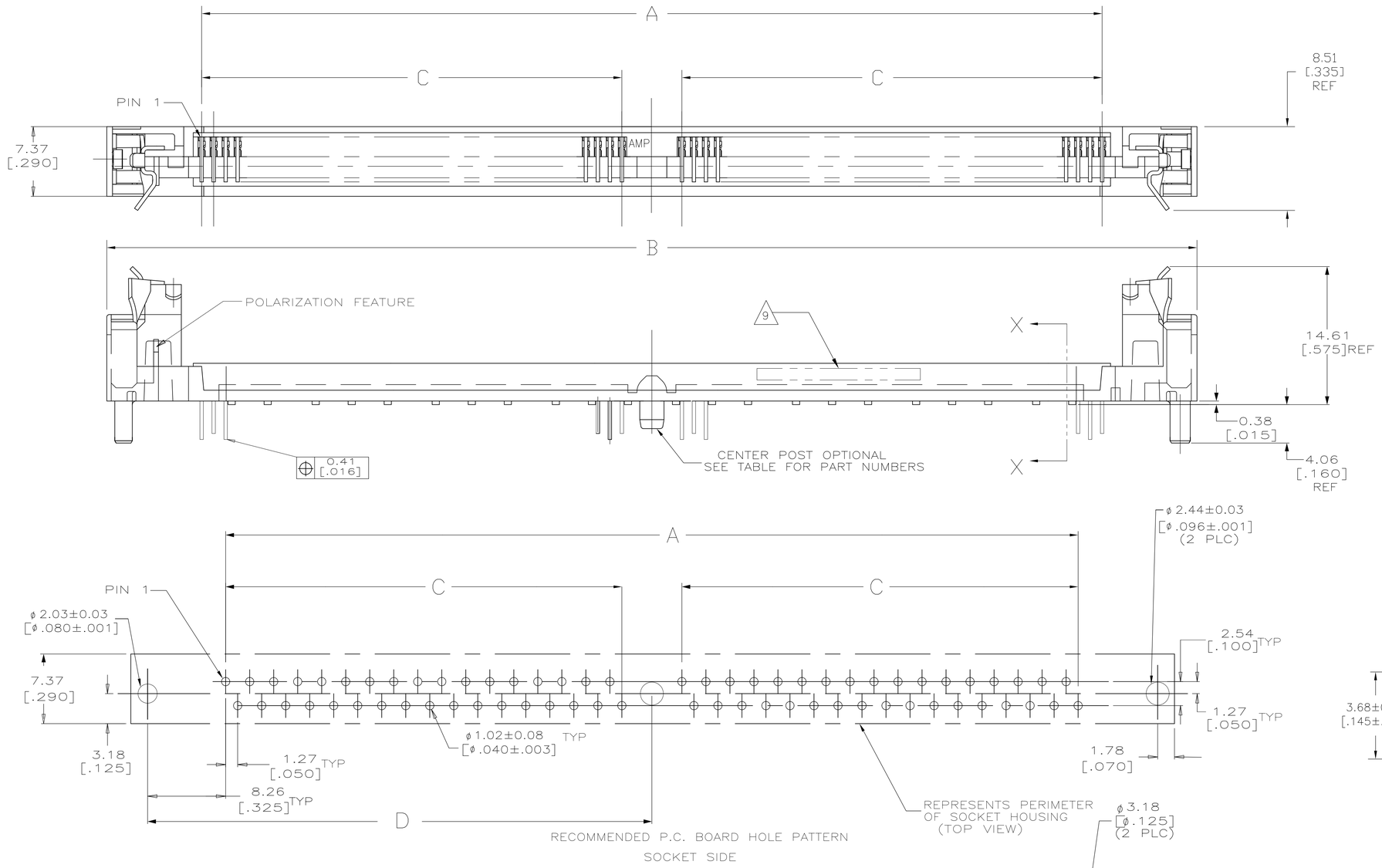


RECOMMENDED P.C. BOARD HOLE PATTERN

SOCKET SIDE

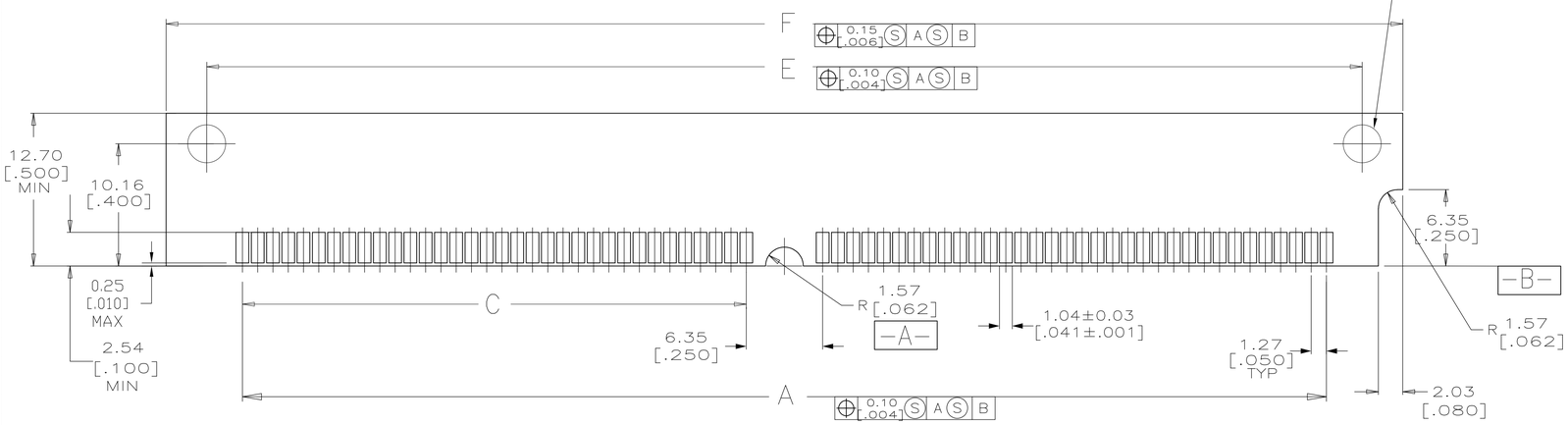


RECOMMENDED "SIMM" P.C. BOARD

1. HOUSING-MATERIAL : LIQUID-CRYSTAL-POLYMER, COLOR:NATURAL.
2. CONTACT-MATERIAL : PHOS. BRONZE.
3. LATCH-MATERIAL : BRASS, NICKEL PLATE.
4. CONTACT-PLATE 0.00127 [.000050] MIN NICKEL ALL OVER.
5. CONTACT-PLATE 0.00076[.000030] MIN. GOLD AT CONTACT PTS.
6. CONTACT SOLDERTAILS-PLATE 0.00508[.000200] MIN MATTE TIN.
7. IN ADDITION TO THOSE RECOMMENDED "SIMM" P.C. BOARD DIMENSIONS AND TOLERANCES SHOWN, ALL JEDEC SPECIFICATIONS APPLY AS SHOWN ON MO-116, ISSUE A.
8. RECOMMENDED MATING S.I.M.M. TAB METALLURAGY: BASE METAL-COPPER. PLATING TO BE 0.00076[.000030] MIN GOLD OVER 0.00127[.000050] MIN NICKEL.
9. DATE CODE: (YEAR WEEK) XXXX FORMAT, LOCATED APPROXIMATELY AS SHOWN ON OPPOSITE SIDE.

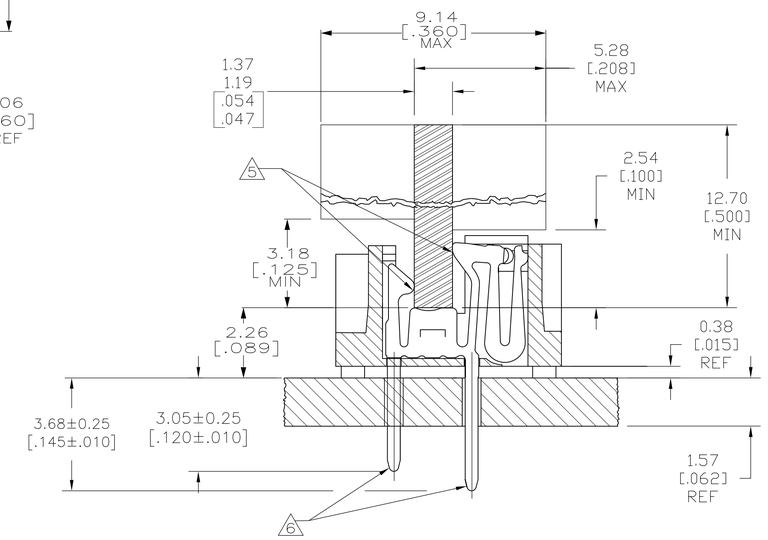


| WITH CENTER POST | | | | | | | |
|---|---|---|---|---|---|---|---|
| 107.95[4.250] | 101.19[3.984] | 55.88[2.200] | 44.45[1.750] | 115.57[4.550] | 95.25[3.750] | 72 | 5821997-3 |
| F | E | D | C | B | A | NO OF POSN | PART NO |

THIS DRAWING IS A CONTROLLED DOCUMENT.

DIMENSIONS: mm [INCHES]

TOLERANCES UNLESS OTHERWISE SPECIFIED:
0 PLC ± -
1 PLC ± -
2 PLC ± -
3 PLC ± 0.13[.005]
4 PLC ± -
ANGLES ± -

MATERIAL 1 2 3

FINISH 4 5 6

DWN S.WAITMAN 5JAN05
CHK M.YEOMANS 5JAN05
APVD M.YEOMANS 5JAN05

PRODUCT SPEC —

APPLICATION SPEC —

WEIGHT —

CUSTOMER DRAWING

TE Connectivity

NAME CONNECTOR, MICRO-EDGE, .050, VERT, GOLD PL, W/METAL LATCH

| SIZE | CAGE CODE | DRAWING NO | RESTRICTED TO |
|---|---|---|---|
| A1 | 00779 | C-5821997 | — |

SCALE 4:1 SHEET 1 OF 1 REV B1

4805 (3/11)