Pilot Operated 2 Port Solenoid Valve

New

CE RoHS

Air | Water | Oil | Heated water (99°C) | High temperature oil (99°C)

Compact

Height

Approx. **7%** Smaller* (7 mm)

(VXD24)

Lightweight

Weight

20% Lighter* (90 g)

(VXD23 Resin body)

* Comparison with SMC conventional model

Enclosure IP65*

* Electrical entry "Faston" type terminal is IP40.

Power consumption

(DC/N.C. valve)

4.5 W (VXD23 to 25)

7 W (VXD26)

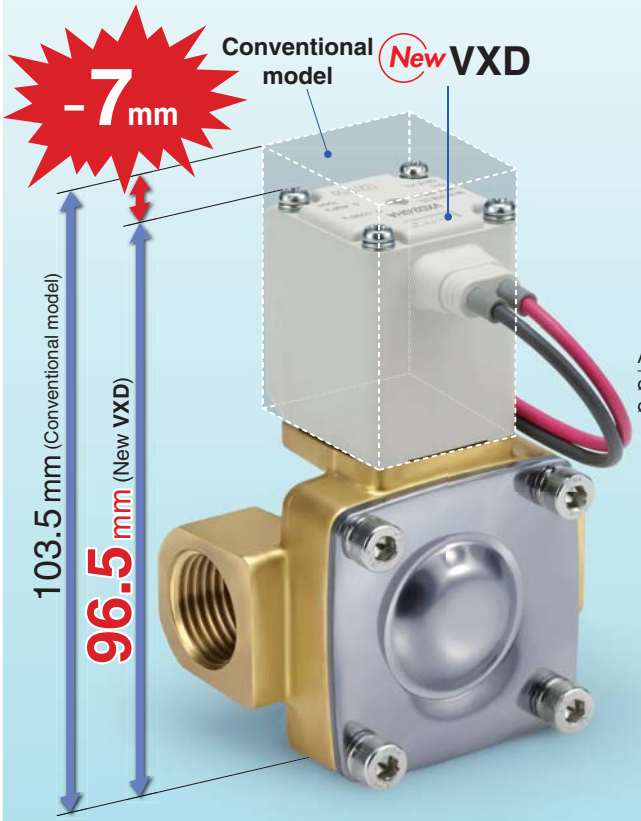

Air

Body material

Resin (VXD2$^{3}_{A}$) **Aluminium** (VXD2$^{3}_{A}$)

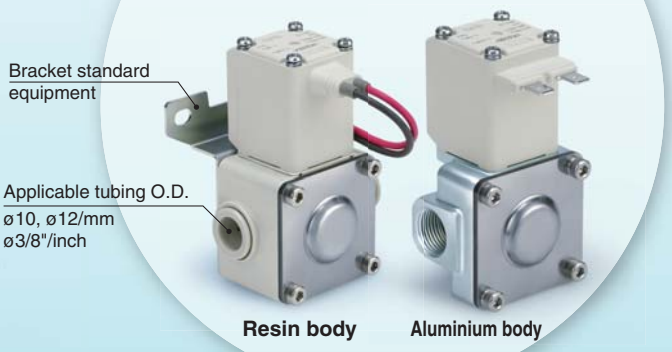

Air | Water | Oil | Heated water (99°C) | High temperature oil (99°C)

Body material

C37 (Brass), Stainless steel

(VXD2$^{3}_{A}$ to 2$^{6}_{D}$)

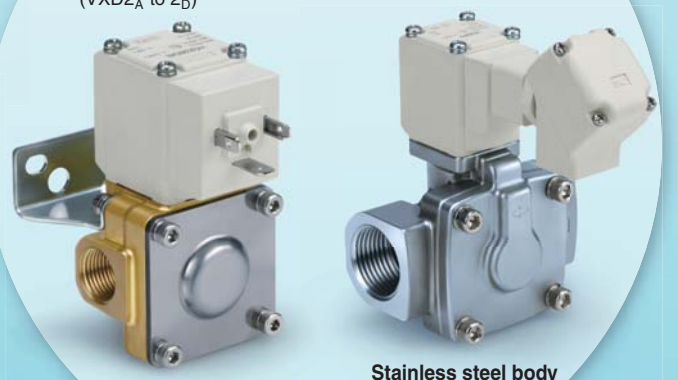

Solenoid coil type

Insulation type Class B/H

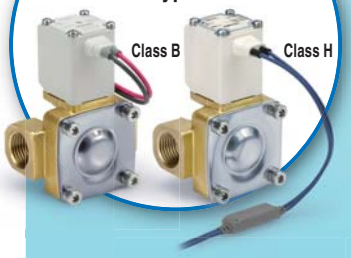

Valve type

N.C. N.O.

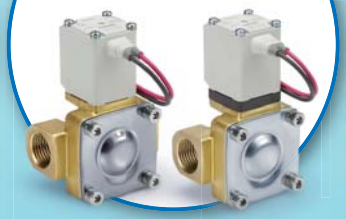

Series VXD

SMC

CAT.EUS70-50A-UK

Pilot Operated 2 Port Solenoid Valve

Series VXD

Enclosure IP65

Flame resistance UL94V-0 conformed

Low-noise construction

Impact noise reduced by the rubber buffer

Piping variations

Thread piping, One-touch fitting

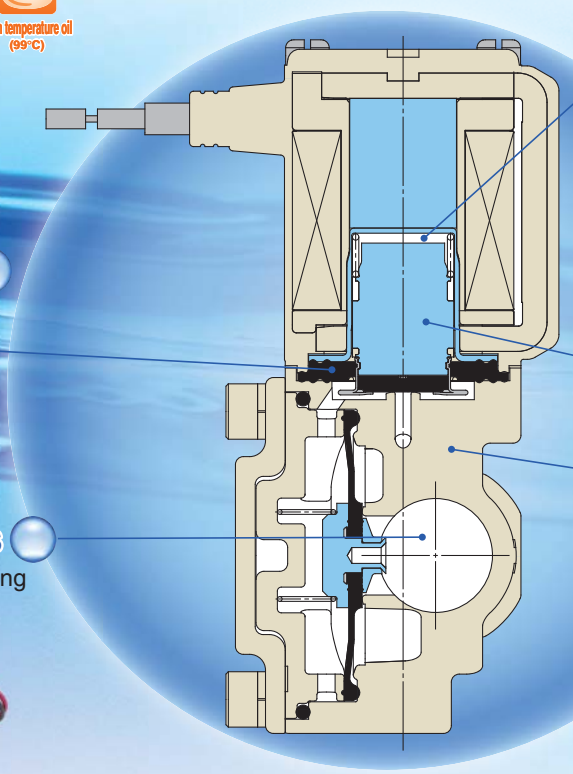

Clearance

By providing a buffer and clearance, we reduced the collision sound of the core when ON (when the valve is open). Because of the clearance, when using highly viscous fluids such as oil, the armature does not get stuck and the responsiveness when OFF (when the valve is closed) is improved.

Power consumption:

4.5 W (VXD23 to 25)

7 W (VXD26)

Improved armature durability

Body material

Air

Aluminium (VXD2$^{3}_{A}$)

Resin (VXD2$^{3}_{A}$)

C37 (Brass)

Stainless steel (VXD2$^{4}_{B}$ to 2$^{6}_{D}$)

Water/Oil/Heated water/ High temperature oil

C37 (Brass)

Stainless steel (VXD2$^{3}_{A}$ to 2$^{6}_{D}$)

Built-in full-wave rectifier type

(AC specification: Insulation type Class B/H)

Improved durability
Service life is extended by special construction. (compared with current shading coil)

Reduced buzz noise
Rectified to DC by a full-wave rectifier, resulting in a buzz noise reduction.

Reduced apparent power (Class B, N.C. valve)
10 VA → **7** VA (VXD23 to 25)
20 VA → **9.5** VA (VXD26)

Improved OFF response
Specially constructed to improve the OFF response when operated with a higher viscosity fluid such as oil.

Low-noise construction
Specially constructed to reduce impact noise during operation.

Model	Size	Orifice diameter	Body material	Port size							
				Thread					One-touch fitting		
				1/4	3/8	1/2	3/4	1	ø10	ø3/8"	ø12
VXD2$^{3}_{A}$	8A 10A 15A	10 mmø	Aluminium	●	●	●	—	—	—	—	—
			Resin	—	—	—	—	—	●	●	●
			C37 (Brass)	●	●	●	—	—	—	—	—
			Stainless steel	●	●	●	—	—	—	—	—
VXD2$^{4}_{B}$	10A 15A	15 mmø	C37 (Brass)	—	●	●	—	—	—	—	—
			Stainless steel	—	●	●	—	—	—	—	—
VXD2$^{5}_{C}$	20A	20 mmø	C37 (Brass)	—	—	—	●	—	—	—	—
			Stainless steel	—	—	—	●	—	—	—	—
VXD2$^{6}_{D}$	25A	25 mmø	C37 (Brass)	—	—	—	—	●	—	—	—
			Stainless steel	—	—	—	—	●	—	—	—

INDEX

Pilot Operated 2 Port Solenoid Valve
Series VXD

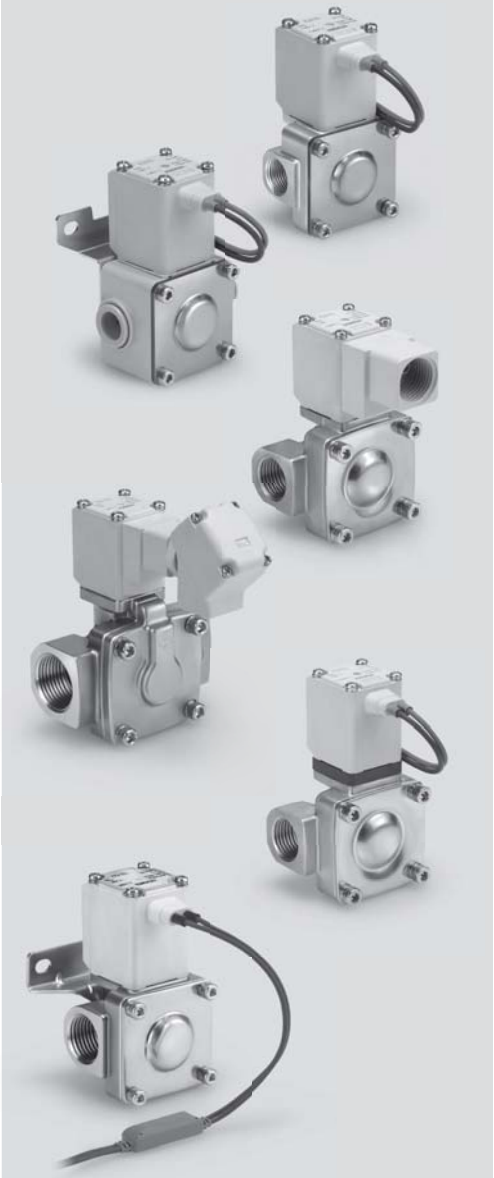

Common Specifications 2
Selection Steps 3

For Air
Model/Valve Specifications, Fluid and Ambient Temperature, Valve Leakage 4, 5
How to Order 6

For Water
Model/Valve Specifications, Fluid and Ambient Temperature, Valve Leakage 7, 8
How to Order 9

For Oil
Model/Valve Specifications, Fluid and Ambient Temperature, Valve Leakage ... 10, 11
How to Order 12

For Heated water
Model/Valve Specifications, Fluid and Ambient Temperature, Valve Leakage ... 13, 14
How to Order 15

For High temperature oil
Model/Valve Specifications, Fluid and Ambient Temperature, Valve Leakage ... 16, 17
How to Order 18

Construction 19
Dimensions
For Air/Water/Oil
Body material: Resin 21
Body material: Aluminium, C37 (Brass), Stainless steel 23
Body material: C37 (Brass), Stainless steel 25
For Heated water/High temperature oil
Body material: C37 (Brass), Stainless steel 29
Replacement Parts 32
Glossary of Terms 33
Solenoid Valve Flow-rate Characteristics 34
Flow-rate Characteristics 39
Specific Product Precautions 41
Safety Instructions ..... Back cover

Common Specifications

Standard Specifications

Valve specifications	Valve construction		Pilot operated 2 port diaphragm type
	Withstand pressure		2.0 MPa (Resin body type 1.5 MPa)
	Body material		Aluminium, Resin, C37 (Brass), Stainless steel
	Seal material		NBR, FKM, EPDM
	Enclosure		Dust-tight, Water-jet-proof type (IP65) Note)
	Environment		Location without corrosive or explosive gases
Coil specifications	Rated voltage	AC	24 VAC, 48 VAC, 100 VAC, 110 VAC, 200 VAC, 220 VAC, 230 VAC, 240 VAC
		DC	12 VDC, 24 VDC
	Allowable voltage fluctuation		±10% of rated voltage
	Allowable leakage voltage	AC	10% or less of rated voltage
		DC	2% or less of rated voltage
	Coil insulation type		Class B, Class H

Note) Electrical entry "Faston" type terminal is IP40.

⚠ **Be sure to read "Specific Product Precautions" before handling.**

Solenoid Coil Specifications

Normally Closed (N.C.)

DC Specification

Model	Power consumption [W] Note 1)	Temperature rise [°C] Note 2)
VXD23 to 25	4.5	50
VXD26	7	55

Normally Open (N.O.)

DC Specification

Model	Power consumption [W] Note 1)	Temperature rise [°C] Note 2)
VXD2A to 2C	7.5	60
VXD2D	8.5	70

Note 1) Power consumption, Apparent power: The value at ambient temperature of 20°C and when the rated voltage is applied. (Variation: ±10%)
Note 2) The value at ambient temperature of 20°C and when the rated voltage is applied. The value depends on the ambient environment.
This is for reference.

AC Specification (Built-in Full-wave Rectifier Type)

Class B

Model	Apparent power [VA] Note 1) 2)	Temperature rise [°C] Note 3)
VXD23 to 25	7	60
VXD26	9.5	70

Class H

Model	Apparent power [VA] Note 1) 2)	Temperature rise [°C] Note 3)
VXD23 to 25	9	100
VXD26	12	100

AC Specification (Built-in Full-wave Rectifier Type)

Class B

Model	Apparent power [VA]	Temperature rise [°C]
VXD2A to 2C	9	60
VXD2D	10	70

Class H

Model	Apparent power [VA] Note 1) 2)	Temperature rise [°C] Note 3)
VXD2A to 2C	9	100
VXD2D	12	100

Note 1) Power consumption, Apparent power: The value at ambient temperature of 20°C and when the rated voltage is applied. (Variation: ±10%)
Note 2) There is no difference in the frequency and the inrush and energized apparent power, since a rectifying circuit is used in the AC.
Note 3) The value at ambient temperature of 20°C and when the rated voltage is applied. The value depends on the ambient environment.
This is for reference.

Selection Steps

Selection Steps

Step 1 Select the fluid.

Item	Selection item	Page	Symbol	
Select the fluid.	Air	Page 4	0	❶
	Water	Page 7	2	
	Oil	Page 10	3	
	Heated water	Page 13	5	
	High temperature oil	Page 16	6	

VXD2 3 0 A A
❶

Step 2 Select "Body material", "Port size" and "Orifice diameter" from "Flow rate — Pressure" of each fluid.

Item	Selection item		Symbol	
Select from "Flow rate — Pressure." • Body material • Port size • Orifice diameter	Size	8A	3	❷
	Valve type	N.C.		
	Body material	Aluminium	A	❸
	Port size	1/4		
	Orifice diameter	10		

VXD2 3 0 A A
❷ ❸

Step 3 Select electrical specification.

Item	Selection item		Symbol	
Select electrical specification.	Voltage	24 VDC	A	❹
	Electrical entry	Grommet		

VXD2 3 0 A A
❹

Step 4 For other options, refer to each "How to Order".

For Air

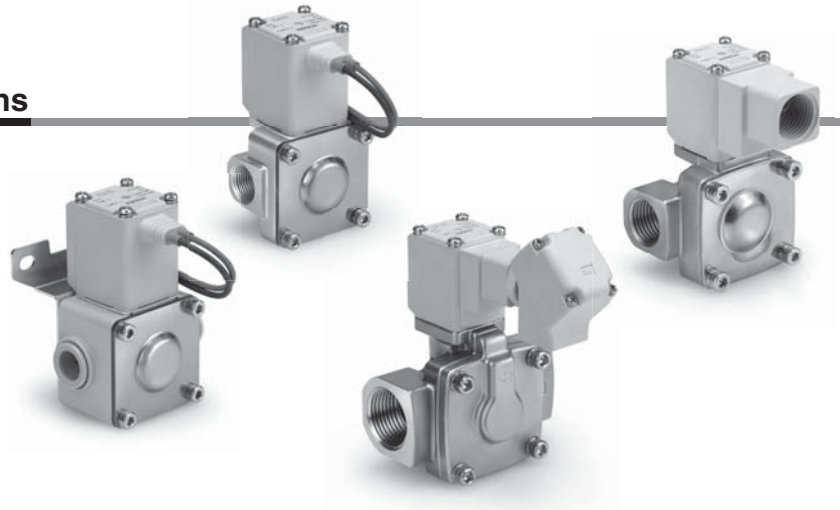

Model/Valve Specifications

N.C.

Symbol

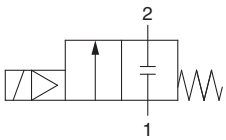

Refer to "Glossary of Terms" on page 33 for symbol.

Normally Closed (N.C.)

Body material	Port size	Orifice diameter [mmø]	Model	Minimum operating pressure differential Note 1) [MPa]	Maximum operating pressure differential AC	Maximum operating pressure differential DC	Flow-rate characteristics C	b	Cv	Effective area [mm²]	Maximum system pressure [MPa]	Weight Note 2) [g]
Aluminium	1/4 (8A)	10	**VXD230**	0.02	0.9	0.7	8.5	0.35	2.0	—	1.5	370
	3/8 (10A)						9.2		2.4			370
	1/2 (15A)						9.2		2.4			370
Resin	ø10						5.6	0.33	1.3			330
	ø3/8"						4.8	0.33	0.9			330
	ø12						7.2	0.33	1.5			330
Stainless steel, C37 (Brass)	3/8 (10A)	15	**VXD240**		1.0	1.0	18.0	0.35	5.0			720
	1/2 (15A)						20.0		5.5			720
	3/4 (20A)	20	**VXD250**				38.0	0.30	9.5			840
	1 (25A)	25	**VXD260**				—			225		1360

Note 1) Be aware that even if the pressure difference is above the minimum operating pressure differential when the valve is closed, the pressure difference may fall below the minimum operating pressure differential when the valve opens, depending on the power of the supply source (pumps, compressors, etc.) or the type of pipe restrictions.
Note 2) Weight of grommet type. Add 10 g for conduit type, 30 g for DIN terminal type, 60 g for conduit terminal type respectively.
Note 3) If you need a valve for air of C37 (Brass) or SUS (Stainless steel) in the port size of 1/4, use the valve for water.
- Refer to "Glossary of Terms" on page 33 for details on minimum operating pressure differential, the maximum operating pressure differential, maximum system pressure.

Fluid and Ambient Temperature

Fluid temperature [°C]	Ambient temperature [°C]
–10 Note) to 60	–20 to 60

Note) Dew point temperature: –10°C or less

Valve Leakage

Internal Leakage

Seal material	Leakage rate (Air) Note) **VXD23 to 26** (8A to 25A)
NBR, FKM	15 cm³/min or less (Aluminium body type)
	15 cm³/min or less (Resin body type)
	2 cm³/min or less (Metal body type)

External Leakage

Seal material	Leakage rate (Air) Note) **VXD23 to 26** (8A to 25A)
NBR, FKM	15 cm³/min or less (Aluminium body type)
	15 cm³/min or less (Resin body type)
	1 cm³/min or less (Metal body type)

Note) Leakage is the value at ambient temperature 20°C.

Model/Valve Specifications

N.O.

Symbol

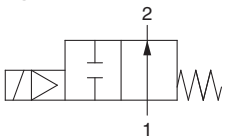

Refer to "Glossary of Terms" on page 33 for symbol.

Normally Open (N.O.)

Body material	Port size	Orifice diameter [mmø]	Model	Minimum operating pressure differential Note 1) [MPa]	Maximum operating pressure differential AC	Maximum operating pressure differential DC	Flow-rate characteristics C	b	Cv	Effective area [mm²]	Maximum system pressure [MPa]	Weight Note 2) [g]
Aluminium	1/4 (8A)	10	**VXD2A0**	0.02	0.6	0.4	8.5	0.35	2.0	—	1.5	390
	3/8 (10A)						9.2		2.4			390
	1/2 (15A)						9.2		2.4			390
Resin	ø10						5.6	0.33	1.3			350
	ø3/8"						4.8		0.9			350
	ø12						7.2		1.5			350
Stainless steel, C37 (Brass)	3/8 (10A)	15	**VXD2B0**		0.7	0.7	18.0	0.35	5.0			740
	1/2 (15A)						20.0		5.5			740
	3/4 (20A)	20	**VXD2C0**				38.0	0.30	9.5			860
	1 (25A)	25	**VXD2D0**				—			225		1390

Note 1) Be aware that even if the pressure difference is above the minimum operating pressure differential when the valve is closed, the pressure difference may fall below the minimum operating pressure differential when the valve opens, depending on the power of the supply source (pumps, compressors, etc.) or the type of pipe restrictions.
Note 2) Weight of grommet type. Add 10 g for conduit type, 30 g for DIN terminal type, 60 g for conduit terminal type respectively.
Note 3) If you need a valve for air of C37 (Brass) or SUS (Stainless steel) in the port size of 1/4, use the valve for water.
- Refer to "Glossary of Terms" on page 33 for details on minimum operating pressure differential, the maximum operating pressure differential, maximum system pressure.

Fluid and Ambient Temperature

Fluid temperature [°C]	Ambient temperature [°C]
–10 Note) to 60	–20 to 60

Note) Dew point temperature: –10°C or less

Valve Leakage

Internal Leakage

Seal material	Leakage rate (Air) Note) **VXD2A to 2D** (8A to 25A)
NBR, FKM	15 cm³/min or less (Aluminium body type)
	15 cm³/min or less (Resin body type)
	2 cm³/min or less (Metal body type)

External Leakage

Seal material	Leakage rate (Air) Note) **VXD2A to 2D** (8A to 25A)
NBR, FKM	15 cm³/min or less (Aluminium body type)
	15 cm³/min or less (Resin body type)
	1 cm³/min or less (Metal body type)

Note) Leakage is the value at ambient temperature 20°C.

How to Order

VXD2 3 0 A A A

Fluid

0	Air

Size—Valve type

Symbol	Size	Valve type
3	8A 10A 15A	N.C.
A Note)		N.O.
4	10A 15A	N.C.
B		N.O.
5	20A	N.C.
C		N.O.
6	25A	N.C.
D		N.O.

Body material/Port size/Orifice diameter

Symbol	Body material	Port size	Orifice diameter
A	Aluminium	1/4	10
B		3/8	
C		1/2	
D	Resin	ø10 One-touch fitting	
E		ø3/8" One-touch fitting	
F		ø12 One-touch fitting	
G	C37 (Brass)	3/8	15
H		1/2	
J	Stainless steel	3/8	
K		1/2	
L	C37 (Brass)	3/4	20
M	Stainless steel		
N	C37 (Brass)	1	25
P	Stainless steel		

Note 1) VXD2A0 only possible with other options with one-touch fitting (–, C, H and Z).
Note 2) If you need a valve for air of C37 (Brass) or SUS (Stainless steel) in the port size of 1/4, use the valve for water.

Voltage/Electrical entry (coil insulation type: Class B)

Symbol	Voltage	Electrical entry
A	24 VDC	Grommet
B	100 VAC	Grommet (With surge voltage suppressor)
C	110 VAC	
D	200 VAC	
E	230 VAC	
F	24 VDC	
G	24 VDC	DIN terminal (With surge voltage suppressor)
H	100 VAC	
J	110 VAC	
K	200 VAC	
L	230 VAC	
M	24 VDC	Conduit terminal (With surge voltage suppressor)
N	100 VAC	
P	110 VAC	
Q	200 VAC	
R	230 VAC	
S	24 VDC	Conduit (With surge voltage suppressor)
T	100 VAC	
U	110 VAC	
V	200 VAC	
W	230 VAC	
Y	24 VDC	Faston terminal
Z1A	48 VAC	Grommet (With surge voltage suppressor)
Z1B	220 VAC	
Z1C	240 VAC	
Z1U	24 VAC	
Z1D	12 VDC	Grommet
Z1E	12 VDC	Grommet (With surge voltage suppressor)
Z1F	48 VAC	DIN terminal (With surge voltage suppressor)
Z1G	220 VAC	
Z1H	240 VAC	
Z1V	24 VAC	
Z1J	12 VDC	
Z1K	48 VAC	Conduit terminal (With surge voltage suppressor)
Z1L	220 VAC	
Z1M	240 VAC	

Symbol	Voltage	Electrical entry
Z1W	24 VAC	Conduit terminal (With surge voltage suppressor)
Z1N	12 VDC	
Z1P	48 VAC	Conduit (With surge voltage suppressor)
Z1Q	220 VAC	
Z1R	240 VAC	
Z1Y	24 VAC	
Z1S	12 VDC	
Z1T	12 VDC	Faston terminal
Z2A	24 VDC	DIN terminal (With surge voltage suppressor, with light)
Z2B	100 VAC	
Z2C	110 VAC	
Z2D	200 VAC	
Z2E	230 VAC	
Z2F	48 VAC	
Z2G	220 VAC	
Z2H	240 VAC	
Z2V	24 VAC	
Z2J	12 VDC	
Z2K	24 VDC	Conduit terminal (With surge voltage suppressor, with light)
Z2L	100 VAC	
Z2M	110 VAC	
Z2N	200 VAC	
Z2P	230 VAC	
Z2Q	48 VAC	
Z2R	220 VAC	
Z2S	240 VAC	
Z2W	24 VAC	
Z2T	12 VDC	
Z3A	24 VDC	DIN terminal (With surge voltage suppressor, without DIN connector)
Z3B	100 VAC	
Z3C	110 VAC	
Z3D	200 VAC	
Z3E	230 VAC	
Z3F	48 VAC	
Z3G	220 VAC	
Z3H	240 VAC	
Z3V	24 VAC	
Z3J	12 VDC	

With bracket

—	No
XB	Yes

Note) Bracket is standardised with the resin body type (VXD230 D/E/F□). No need to add "XB".

∗ The bracket for aluminium, C37 (Brass) and stainless steel body type of the VXD23 is shipped together with the product, but not assembled. (Refer to the figure below for mounting.)

VXD2 3/A□ Bracket mounting dimensions

Port size: For 1/4, 3/8

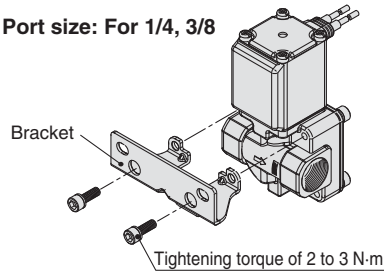

Port size: For 1/2

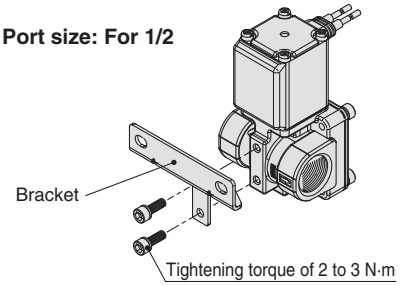

Other options

Symbol	Seal material Note 1)	Oil-free	Port thread
—	NBR	—	Rc, With one-touch fitting Note 2)
A	NBR	—	G
B			NPT
C	FKM	—	Rc, With one-touch fitting Note 2)
D	NBR	○	G
E			NPT
F	FKM	—	G
G			NPT
H	FKM	○	Rc, With one-touch fitting Note 2)
K			G
L			NPT
Z	NBR	○	Rc, With one-touch fitting Note 2)

Note 1) For low concentration ozone resistant, select seal material FKM.
Note 2) One-touch fittings are attached to the resin body type.

Dimensions → Page on and after 21 (Single Unit)

For Water

∗ Possible to use this for air.
Note that the maximum operating pressure differential and flow-rate characteristics should be within the specifications for air.

Model/Valve Specifications

N.C.

Symbol

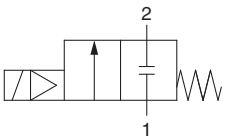

Refer to "Glossary of Terms" on page 33 for symbol.

Normally Closed (N.C.)

Body material	Port size	Orifice diameter [mmø]	Model	Minimum operating pressure differential Note 1) [MPa]	Maximum operating pressure differential AC	Maximum operating pressure differential DC	Flow-rate characteristics Av (x 10^{-6}m^2)	Flow-rate characteristics Conversion Cv	Maximum system pressure [MPa]	Weight Note 2) [g]
Stainless steel, C37 (Brass)	1/4 (8A)	10	**VXD232**	0.02	0.7	0.5	46	1.9	1.5	480
	3/8 (10A)						58	2.4		480
	1/2 (15A)						58	2.4		480
	3/8 (10A)	15	**VXD242**		1.0	1.0	110	4.5		720
	1/2 (15A)						130	5.5		720
	3/4 (20A)	20	**VXD252**				230	9.5		840
	1 (25A)	25	**VXD262**				310	13		1360

Note 1) Be aware that even if the pressure difference is above the minimum operating pressure differential when the valve is closed, the pressure difference may fall below the minimum operating pressure differential when the valve opens, depending on the power of the supply source (pumps, compressors, etc.) or the type of pipe restrictions.
Note 2) Weight of grommet type. Add 10 g for conduit type, 30 g for DIN terminal type, 60 g for conduit terminal type respectively.
- Refer to "Glossary of Terms" on page 33 for details on minimum operating pressure differential, the maximum operating pressure differential, maximum system pressure.

Fluid and Ambient Temperature

Fluid temperature [°C]	Ambient temperature [°C]
1 to 60 Note)	–20 to 60

Note) No freezing

Valve Leakage

Internal Leakage

Seal material	Leakage rate (Water) Note)
	VXD23 to 26 (8A to 25A)
NBR, FKM	0.2 cm^3/min or less

External Leakage

Seal material	Leakage rate (Water) Note)
	VXD23 to 26 (8A to 25A)
NBR, FKM	0.1 cm^3/min or less

Note) Leakage is the value at ambient temperature 20°C.

Model/Valve Specifications

N.O.

Symbol

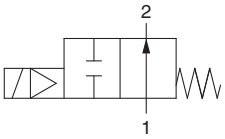

Refer to "Glossary of Terms" on page 33 for symbol.

Normally Open (N.O.)

Body material	Port size	Orifice diameter [mmø]	Model	Minimum operating pressure differential Note 1) [MPa]	Maximum operating pressure differential		Flow-rate characteristics		Maximum system pressure [MPa]	Weight Note 2) [g]
					AC	DC	Av (x $10^{-6}m^2$)	Conversion Cv		
Stainless steel, C37 (Brass)	1/4 (8A)	10	**VXD2A2**	0.02	0.4	0.3	46	1.9	1.5	500
	3/8 (10A)						58	2.4		500
	1/2 (15A)						58	2.4		500
	3/8 (10A)	15	**VXD2B2**		0.7	0.7	110	4.5		740
	1/2 (15A)						130	5.5		740
	3/4 (20A)	20	**VXD2C2**				230	9.5		860
	1 (25A)	25	**VXD2D2**				310	13		1390

Note 1) Be aware that even if the pressure difference is above the minimum operating pressure differential when the valve is closed, the pressure difference may fall below the minimum operating pressure differential when the valve opens, depending on the power of the supply source (pumps, compressors, etc.) or the type of pipe restrictions.
Note 2) Weight of grommet type. Add 10 g for conduit type, 30 g for DIN terminal type, 60 g for conduit terminal type respectively.
- Refer to "Glossary of Terms" on page 33 for details on minimum operating pressure differential, the maximum operating pressure differential, maximum system pressure.

Fluid and Ambient Temperature

Fluid temperature [°C]	Ambient temperature [°C]
1 to 60 Note)	–20 to 60

Note) No freezing

Valve Leakage

Internal Leakage

Seal material	Leakage rate (Water) Note)
	VXD2A to 2D (8A to 25A)
NBR, FKM	0.2 cm^3/min or less

External Leakage

Seal material	Leakage rate (Water) Note)
	VXD2A to 2D (8A to 25A)
NBR, FKM	0.1 cm^3/min or less

Note) Leakage is the value at ambient temperature 20°C.

How to Order

VXD2 3 2 A A A □

Fluid

2	Water

With bracket

—	No
XB	Yes

Size—Valve type

Symbol	Size	Valve type
3	8A 10A 15A	N.C.
A		N.O.
4	10A 15A	N.C.
B		N.O.
5	20A	N.C.
C		N.O.
6	25A	N.C.
D		N.O.

Body material/Port size/Orifice diameter

Symbol	Body material	Port size	Orifice diameter
A	C37 (Brass)	1/4	10
B		3/8	
C		1/2	
D	Stainless steel	1/4	
E		3/8	
F		1/2	
G	C37 (Brass)	3/8	15
H		1/2	
J	Stainless steel	3/8	
K		1/2	
L	C37 (Brass)	3/4	20
M	Stainless steel		
N	C37 (Brass)	1	25
P	Stainless steel		

Voltage/Electrical entry (coil insulation type: Class B)

Symbol	Voltage	Electrical entry
A	24 VDC	Grommet
B	100 VAC	Grommet (With surge voltage suppressor)
C	110 VAC	
D	200 VAC	
E	230 VAC	
F	24 VDC	
G	24 VDC	DIN terminal (With surge voltage suppressor)
H	100 VAC	
J	110 VAC	
K	200 VAC	
L	230 VAC	
M	24 VDC	Conduit terminal (With surge voltage suppressor)
N	100 VAC	
P	110 VAC	
Q	200 VAC	
R	230 VAC	
S	24 VDC	Conduit (With surge voltage suppressor)
T	100 VAC	
U	110 VAC	
V	200 VAC	
W	230 VAC	
Y	24 VDC	Faston terminal
Z1A	48 VAC	Grommet (With surge voltage suppressor)
Z1B	220 VAC	
Z1C	240 VAC	
Z1U	24 VAC	
Z1D	12 VDC	Grommet
Z1E	12 VDC	Grommet (With surge voltage suppressor)
Z1F	48 VAC	DIN terminal (With surge voltage suppressor)
Z1G	220 VAC	
Z1H	240 VAC	
Z1V	24 VAC	
Z1J	12 VDC	
Z1K	48 VAC	Conduit terminal (With surge voltage suppressor)
Z1L	220 VAC	
Z1M	240 VAC	

Symbol	Voltage	Electrical entry
Z1W	24 VAC	Conduit terminal (With surge voltage suppressor)
Z1N	12 VDC	
Z1P	48 VAC	Conduit (With surge voltage suppressor)
Z1Q	220 VAC	
Z1R	240 VAC	
Z1Y	24 VAC	
Z1S	12 VDC	
Z1T	12 VDC	Faston terminal
Z2A	24 VDC	DIN terminal (With surge voltage suppressor, with light)
Z2B	100 VAC	
Z2C	110 VAC	
Z2D	200 VAC	
Z2E	230 VAC	
Z2F	48 VAC	
Z2G	220 VAC	
Z2H	240 VAC	
Z2V	24 VAC	
Z2J	12 VDC	
Z2K	24 VDC	Conduit terminal (With surge voltage suppressor, with light)
Z2L	100 VAC	
Z2M	110 VAC	
Z2N	200 VAC	
Z2P	230 VAC	
Z2Q	48 VAC	
Z2R	220 VAC	
Z2S	240 VAC	
Z2W	24 VAC	
Z2T	12 VDC	
Z3A	24 VDC	DIN terminal (With surge voltage suppressor, without DIN connector)
Z3B	100 VAC	
Z3C	110 VAC	
Z3D	200 VAC	
Z3E	230 VAC	
Z3F	48 VAC	
Z3G	220 VAC	
Z3H	240 VAC	
Z3V	24 VAC	
Z3J	12 VDC	

* The bracket for aluminium, C37 (Brass) and stainless steel body type of the VXD23 is shipped together with the product, but not assembled. (Refer to the figure below for mounting.)

VXD2$^{3}_{A}$□ Bracket mounting dimensions

Port size: For 1/4, 3/8

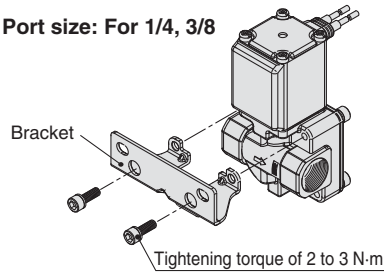

Port size: For 1/2

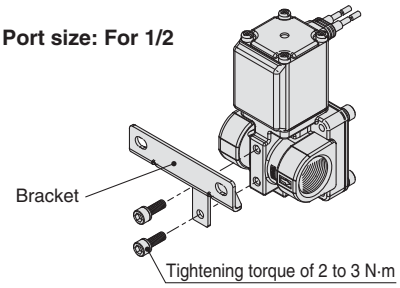

Other options

Symbol	Seal material Note)	Oil-free	Port thread
—	NBR	—	Rc
A	NBR	—	G
B			NPT
C	FKM	—	Rc
D	NBR	○	G
E			NPT
F	FKM	—	G
G			NPT
H	FKM	○	Rc
K			G
L			NPT
Z	NBR	○	Rc

Note) For low concentration ozone resistant and deionised water, select seal material FKM.

Dimensions → Page on and after 23 (Single Unit)

For Oil

∗ Possible to use this for air and water.
Note that the maximum operating pressure differential and flow-rate characteristics should be within the specifications of the fluid used.

⚠ When the fluid is oil.

The kinematic viscosity must not exceed 50 mm²/s. The special construction of the armature adopted in the built-in full-wave rectifier type gives an improvement in OFF response by providing clearance on the absorbed surface when it is switched ON.

Model/Valve Specifications

N.C.

Symbol

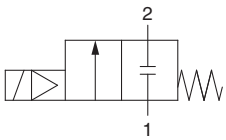

Refer to "Glossary of Terms" on page 33 for symbol.

Normally Closed (N.C.)

Body material	Port size	Orifice diameter [mmø]	Model	Minimum operating pressure differential Note 1) [MPa]	Maximum operating pressure differential AC	Maximum operating pressure differential DC	Flow-rate characteristics Av (x 10^{-6}m²)	Flow-rate characteristics Conversion Cv	Maximum system pressure [MPa]	Weight Note 2) [g]
Stainless steel, C37 (Brass)	1/4 (8A)	10	**VXD233**	0.02	0.5	0.4	46	1.9	1.5	480
	3/8 (10A)						58	2.4		480
	1/2 (15A)						58	2.4		480
	3/8 (10A)	15	**VXD243**		0.7	0.7	110	4.5		720
	1/2 (15A)						130	5.5		720
	3/4 (20A)	20	**VXD253**				230	9.5		840
	1 (25A)	25	**VXD263**				310	13		1360

Note 1) Be aware that even if the pressure difference is above the minimum operating pressure differential when the valve is closed, the pressure difference may fall below the minimum operating pressure differential when the valve opens, depending on the power of the supply source (pumps, compressors, etc.) or the type of pipe restrictions.
Note 2) Weight of grommet type. Add 10 g for conduit type, 30 g for DIN terminal type, 60 g for conduit terminal type respectively.
- Refer to "Glossary of Terms" on page 33 for details on minimum operating pressure differential, the maximum operating pressure differential, maximum system pressure.

Fluid and Ambient Temperature

Fluid temperature [°C]	Ambient temperature [°C]
–5 Note) to 60	–20 to 60

Note) Kinematic viscosity: 50 mm²/s or less

Valve Leakage

Internal Leakage

Seal material	Leakage rate (Oil) Note)
	VXD23 to 26 (8A to 25A)
FKM	0.2 cm³/min or less

External Leakage

Seal material	Leakage rate (Oil) Note)
	VXD23 to 26 (8A to 25A)
FKM	0.1 cm³/min or less

Note) Leakage is the value at ambient temperature 20°C.

⚠When the fluid is oil.

The kinematic viscosity must not exceed 50 mm²/s. The special construction of the armature adopted in the built-in full-wave rectifier type gives an improvement in OFF response by providing clearance on the absorbed surface when it is switched ON.

Model/Valve Specifications

N.O.

Symbol

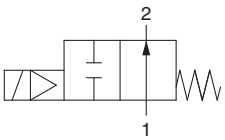

Refer to "Glossary of Terms" on page 33 for symbol.

Normally Open (N.O.)

Body material	Port size	Orifice diameter [mmø]	Model	Minimum operating pressure differential Note 1) [MPa]	Maximum operating pressure differential AC	Maximum operating pressure differential DC	Flow-rate characteristics Av (x 10^{-6}m²)	Flow-rate characteristics Conversion Cv	Maximum system pressure [MPa]	Weight Note 2) [g]
Stainless steel, C37 (Brass)	1/4 (8A)	10	**VXD2A3**	0.02	0.4	0.3	46	1.9	1.5	500
	3/8 (10A)						58	2.4		500
	1/2 (15A)						58	2.4		500
	3/8 (10A)	15	**VXD2B3**		0.6	0.6	110	4.5		740
	1/2 (15A)						130	5.5		740
	3/4 (20A)	20	**VXD2C3**				230	9.5		860
	1 (25A)	25	**VXD2D3**				310	13		1390

Note 1) Be aware that even if the pressure difference is above the minimum operating pressure differential when the valve is closed, the pressure difference may fall below the minimum operating pressure differential when the valve opens, depending on the power of the supply source (pumps, compressors, etc.) or the type of pipe restrictions.

Note 2) Weight of grommet type. Add 10 g for conduit type, 30 g for DIN terminal type, 60 g for conduit terminal type respectively.

- Refer to "Glossary of Terms" on page 33 for details on minimum operating pressure differential, the maximum operating pressure differential, maximum system pressure.

Fluid and Ambient Temperature

Fluid temperature [°C]	Ambient temperature [°C]
–5 Note) to 60	–20 to 60

Note) Kinematic viscosity: 50 mm²/s or less

Valve Leakage

Internal Leakage

Seal material	Leakage rate (Oil) Note)
	VXD2A to 2D (8A to 25A)
FKM	0.2 cm³/min or less

External Leakage

Seal material	Leakage rate (Oil) Note)
	VXD2A to 2D (8A to 25A)
FKM	0.1 cm³/min or less

Note) Leakage is the value at ambient temperature 20°C.

How to Order

RoHS

VXD2 3 3 A A A

Fluid

3	Oil

Size—Valve type

Symbol	Size	Valve type
3	8A 10A 15A	N.C.
A		N.O.
4	10A 15A	N.C.
B		N.O.
5	20A	N.C.
C		N.O.
6	25A	N.C.
D		N.O.

Body material/Port size/Orifice diameter

Symbol	Body material	Port size	Orifice diameter
A	C37 (Brass)	1/4	10
B		3/8	
C		1/2	
D	Stainless steel	1/4	
E		3/8	
F		1/2	
G	C37 (Brass)	3/8	15
H		1/2	
J	Stainless steel	3/8	
K		1/2	
L	C37 (Brass)	3/4	20
M	Stainless steel		
N	C37 (Brass)	1	25
P	Stainless steel		

Voltage/Electrical entry (coil insulation type: Class B)

Symbol	Voltage	Electrical entry
A	24 VDC	Grommet
B	100 VAC	Grommet (With surge voltage suppressor)
C	110 VAC	
D	200 VAC	
E	230 VAC	
F	24 VDC	
G	24 VDC	DIN terminal (With surge voltage suppressor)
H	100 VAC	
J	110 VAC	
K	200 VAC	
L	230 VAC	
M	24 VDC	Conduit terminal (With surge voltage suppressor)
N	100 VAC	
P	110 VAC	
Q	200 VAC	
R	230 VAC	
S	24 VDC	Conduit (With surge voltage suppressor)
T	100 VAC	
U	110 VAC	
V	200 VAC	
W	230 VAC	
Y	24 VDC	Faston terminal
Z1A	48 VAC	Grommet (With surge voltage suppressor)
Z1B	220 VAC	
Z1C	240 VAC	
Z1U	24 VAC	
Z1D	12 VDC	Grommet
Z1E	12 VDC	Grommet (With surge voltage suppressor)
Z1F	48 VAC	DIN terminal (With surge voltage suppressor)
Z1G	220 VAC	
Z1H	240 VAC	
Z1V	24 VAC	
Z1J	12 VDC	
Z1K	48 VAC	Conduit terminal (With surge voltage suppressor)
Z1L	220 VAC	
Z1M	240 VAC	

Symbol	Voltage	Electrical entry
Z1W	24 VAC	Conduit terminal (With surge voltage suppressor)
Z1N	12 VDC	
Z1P	48 VAC	Conduit (With surge voltage suppressor)
Z1Q	220 VAC	
Z1R	240 VAC	
Z1Y	24 VAC	
Z1S	12 VDC	
Z1T	12 VDC	Faston terminal
Z2A	24 VDC	DIN terminal (With surge voltage suppressor, with light)
Z2B	100 VAC	
Z2C	110 VAC	
Z2D	200 VAC	
Z2E	230 VAC	
Z2F	48 VAC	
Z2G	220 VAC	
Z2H	240 VAC	
Z2V	24 VAC	
Z2J	12 VDC	
Z2K	24 VDC	Conduit terminal (With surge voltage suppressor, with light)
Z2L	100 VAC	
Z2M	110 VAC	
Z2N	200 VAC	
Z2P	230 VAC	
Z2Q	48 VAC	
Z2R	220 VAC	
Z2S	240 VAC	
Z2W	24 VAC	
Z2T	12 VDC	
Z3A	24 VDC	DIN terminal (With surge voltage suppressor, without DIN connector)
Z3B	100 VAC	
Z3C	110 VAC	
Z3D	200 VAC	
Z3E	230 VAC	
Z3F	48 VAC	
Z3G	220 VAC	
Z3H	240 VAC	
Z3V	24 VAC	
Z3J	12 VDC	

With bracket

—	No
XB	Yes

Common Specifications

Seal material	FKM

∗ The bracket for aluminium, C37 (Brass) and stainless steel body type of the VXD23 is shipped together with the product, but not assembled. (Refer to the figure below for mounting.)

VXD2$^{3}_{A}$□ Bracket mounting dimensions

Port size: For 1/4, 3/8

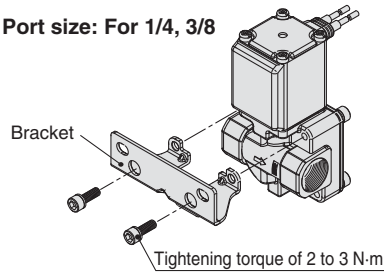

Port size: For 1/2

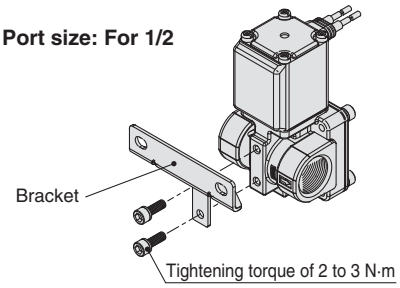

Other options

Symbol	Oil-free	Port thread
—	—	Rc
A	—	G
B		NPT
D	○	G
E		NPT
Z	○	Rc

Dimensions → Page on and after 23 (Single Unit)

For Heated water

∗ Possible to use this for air (to 99°C) and water.
Note that the maximum operating pressure differential and flow-rate characteristics should be within the specifications of the fluid used.

Model/Valve Specifications

N.C.

Symbol

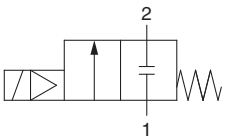

Refer to "Glossary of Terms" on page 33 for symbol.

Normally Closed (N.C.)

Body material	Port size	Orifice diameter [mmø]	Model	Minimum operating pressure differential Note 1) [MPa]	Maximum operating pressure differential AC	Flow-rate characteristics Av (x 10^{-6}m^2)	Flow-rate characteristics Conversion Cv	Maximum system pressure [MPa]	Weight Note 2) [g]
Stainless steel, C37 (Brass)	1/4 (8A)	10	**VXD235**	0.02	0.7	46	1.9	1.5	480
	3/8 (10A)					58	2.4		480
	1/2 (15A)					58	2.4		480
	3/8 (10A)	15	**VXD245**		1.0	110	4.5		720
	1/2 (15A)					130	5.5		720
	3/4 (20A)	20	**VXD255**			230	9.5		840
	1 (25A)	25	**VXD265**			310	13		1360

Note 1) Be aware that even if the pressure difference is above the minimum operating pressure differential when the valve is closed, the pressure difference may fall below the minimum operating pressure differential when the valve opens, depending on the power of the supply source (pumps, compressors, etc.) or the type of pipe restrictions.
Note 2) Weight of grommet type. Add 10 g for conduit type, 60 g for conduit terminal type respectively.
- Refer to "Glossary of Terms" on page 33 for details on minimum operating pressure differential, the maximum operating pressure differential, maximum system pressure.

Fluid and Ambient Temperature

Fluid temperature [°C]	Ambient temperature [°C]
1 to 99	–20 to 60

Note) No freezing

Valve Leakage

Internal Leakage

Seal material	Leakage rate (Water) Note)
	VXD23 to 26 (8A to 25A)
EPDM	0.2 cm^3/min or less

External Leakage

Seal material	Leakage rate (Water) Note)
	VXD23 to 26 (8A to 25A)
EPDM	0.1 cm^3/min or less

Note) Leakage is the value at ambient temperature 20°C.

Model/Valve Specifications

N.O.

Symbol

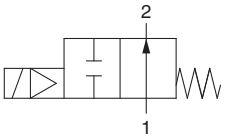

Refer to “Glossary of Terms” on page 33 for symbol.

Normally Open (N.O.)

Body material	Port size	Orifice diameter [mmø]	Model	Minimum operating pressure differential Note 1) [MPa]	Maximum operating pressure differential AC	Flow-rate characteristics Av (x 10^{-6}m^2)	Flow-rate characteristics Conversion Cv	Maximum system pressure [MPa]	Weight Note 2) [g]
Stainless steel, C37 (Brass)	1/4 (8A)	10	**VXD2A5**	0.02	0.4	46	1.9	1.5	500
	3/8 (10A)					58	2.4		500
	1/2 (15A)					58	2.4		500
	3/8 (10A)	15	**VXD2B5**		0.7	110	4.5		740
	1/2 (15A)					130	5.5		740
	3/4 (20A)	20	**VXD2C5**			230	9.5		860
	1 (25A)	25	**VXD2D5**			310	13		1390

Note 1) Be aware that even if the pressure difference is above the minimum operating pressure differential when the valve is closed, the pressure difference may fall below the minimum operating pressure differential when the valve opens, depending on the power of the supply source (pumps, compressors, etc.) or the type of pipe restrictions.
Note 2) Weight of grommet type. Add 10 g for conduit type, 60 g for conduit terminal type respectively.
- Refer to “Glossary of Terms” on page 33 for details on minimum operating pressure differential, the maximum operating pressure differential, maximum system pressure.

Fluid and Ambient Temperature

Fluid temperature [°C]	Ambient temperature [°C]
1 to 99	–20 to 60

Note) No freezing

Valve Leakage

Internal Leakage

Seal material	Leakage rate (Water) Note)
	VXD2A to 2D (8A to 25A)
EPDM	0.2 cm^3/min or less

External Leakage

Seal material	Leakage rate (Water) Note)
	VXD2A to 2D (8A to 25A)
EPDM	0.1 cm^3/min or less

Note) Leakage is the value at ambient temperature 20°C.

How to Order

VXD2 3 5 A B A □

Fluid

5	Heated water

Size—Valve type

Symbol	Size	Valve type
3	8A 10A 15A	N.C.
A		N.O.
4	10A 15A	N.C.
B		N.O.
5	20A	N.C.
C		N.O.
6	25A	N.C.
D		N.O.

Body material/Port size/Orifice diameter

Symbol	Body material	Port size	Orifice diameter
A	C37 (Brass)	1/4	10
B		3/8	
C		1/2	
D	Stainless steel	1/4	
E		3/8	
F		1/2	
G	C37 (Brass)	3/8	15
H		1/2	
J	Stainless steel	3/8	
K		1/2	
L	C37 (Brass)	3/4	20
M	Stainless steel		
N	C37 (Brass)	1	25
P	Stainless steel		

Voltage/Electrical entry (coil insulation type: Class H)

Symbol	Voltage	Electrical entry
B	100 VAC	Grommet (With surge voltage suppressor)
C	110 VAC	
D	200 VAC	
E	230 VAC	
N	100 VAC	Conduit terminal (With surge voltage suppressor)
P	110 VAC	
Q	200 VAC	
R	230 VAC	
T	100 VAC	Conduit (With surge voltage suppressor)
U	110 VAC	
V	200 VAC	
W	230 VAC	
Z1A	48 VAC	Grommet (With surge voltage suppressor)
Z1B	220 VAC	
Z1C	240 VAC	
Z1U	24 VAC	
Z1K	48 VAC	Conduit terminal (With surge voltage suppressor)
Z1L	220 VAC	
Z1M	240 VAC	
Z1W	24 VAC	
Z1P	48 VAC	Conduit (With surge voltage suppressor)
Z1Q	220 VAC	
Z1R	240 VAC	
Z1Y	24 VAC	
Z2L	100 VAC	Conduit terminal (With surge voltage suppressor, with light)
Z2M	110 VAC	
Z2N	200 VAC	
Z2P	230 VAC	
Z2Q	48 VAC	
Z2R	220 VAC	
Z2S	240 VAC	
Z2W	24 VAC	

∗ DIN terminal, Faston terminal or DC specification are not available.

Common Specifications

Seal material	EPDM

With bracket

—	No
XB	Yes

* The bracket for aluminium, C37 (Brass) and stainless steel body type of the VXD23 is shipped together with the product, but not assembled. (Refer to the figure below for mounting.)

VXD2$^{3}_{A}$□ Bracket mounting dimensions

Port size: For 1/4, 3/8

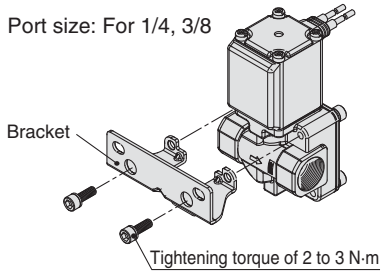

Port size: For 1/2

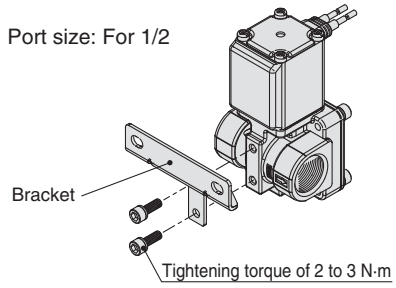

Other options

Symbol	Oil-free	Port thread
—	—	Rc
A	—	G
B		NPT
D	○	G
E		NPT
Z	○	Rc

Dimensions → Page on and after 29 (Single Unit)

For High temperature oil

∗ Possible to use this for air (to 99°C) and water.
Note that the maximum operating pressure differential and flow-rate characteristics should be within the specifications of the fluid used.

⚠When the fluid is oil.

The kinematic viscosity must not exceed 50 mm²/s. The special construction of the armature adopted in the built-in full-wave rectifier type gives an improvement in OFF response by providing clearance on the absorbed surface when it is switched ON.

Model/Valve Specifications

N.C.

Symbol

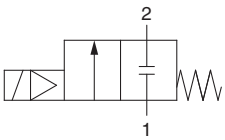

Refer to "Glossary of Terms" on page 33 for symbol.

Normally Closed (N.C.)

Body material	Port size	Orifice diameter [mmø]	Model	Minimum operating pressure differential Note 1) [MPa]	Maximum operating pressure differential AC	Flow-rate characteristics Av (x 10^{-6}m²)	Flow-rate characteristics Conversion Cv	Maximum system pressure [MPa]	Weight Note 2) [g]
Stainless steel, C37 (Brass)	1/4 (8A)	10	**VXD236**	0.02	0.5	46	1.9	1.5	480
	3/8 (10A)					58	2.4		480
	1/2 (15A)					58	2.4		480
	3/8 (10A)	15	**VXD246**		0.7	110	4.5		720
	1/2 (15A)					130	5.5		720
	3/4 (20A)	20	**VXD256**			230	9.5		840
	1 (25A)	25	**VXD266**			310	13		1360

Note 1) Be aware that even if the pressure difference is above the minimum operating pressure differential when the valve is closed, the pressure difference may fall below the minimum operating pressure differential when the valve opens, depending on the power of the supply source (pumps, compressors, etc.) or the type of pipe restrictions.
Note 2) Weight of grommet type. Add 10 g for conduit type, 60 g for conduit terminal type respectively.
- Refer to "Glossary of Terms" on page 33 for details on minimum operating pressure differential, the maximum operating pressure differential, maximum system pressure.

Fluid and Ambient Temperature

Fluid temperature [°C]	Ambient temperature [°C]
−5 Note) to 100	−20 to 60

Note) Kinematic viscosity: 50 mm²/s or less

Valve Leakage

Internal Leakage

Seal material	Leakage rate (Oil) Note)
	VXD23 to 26 (8A to 25A)
FKM	0.2 cm³/min or less

External Leakage

Seal material	Leakage rate (Oil) Note)
	VXD23 to 26 (8A to 25A)
FKM	0.1 cm³/min or less

Note) Leakage is the value at ambient temperature 20°C.

⚠ When the fluid is oil.

The kinematic viscosity must not exceed 50 mm²/s. The special construction of the armature adopted in the built-in full-wave rectifier type gives an improvement in OFF response by providing clearance on the absorbed surface when it is switched ON.

Model/Valve Specifications

N.O.

Symbol

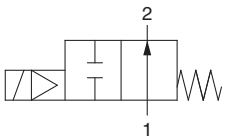

Refer to "Glossary of Terms" on page 33 for symbol.

Normally Open (N.O.)

Body material	Port size	Orifice diameter [mmø]	Model	Minimum operating pressure differential Note 1) [MPa]	Maximum operating pressure differential AC	Flow-rate characteristics Av (x 10^{-6}m²)	Flow-rate characteristics Conversion Cv	Maximum system pressure [MPa]	Weight Note 2) [g]
Stainless steel, C37 (Brass)	1/4 (8A)	10	**VXD2A6**	0.02	0.4	46	1.9	1.5	500
	3/8 (10A)					58	2.4		500
	1/2 (15A)					58	2.4		500
	3/8 (10A)	15	**VXD2B6**		0.6	110	4.5		740
	1/2 (15A)					130	5.5		740
	3/4 (20A)	20	**VXD2C6**			230	9.5		860
	1 (25A)	25	**VXD2D6**			310	13		1390

Note 1) Be aware that even if the pressure difference is above the minimum operating pressure differential when the valve is closed, the pressure difference may fall below the minimum operating pressure differential when the valve opens, depending on the power of the supply source (pumps, compressors, etc.) or the type of pipe restrictions.

Note 2) Weight of grommet type. Add 10 g for conduit type, 60 g for conduit terminal type respectively.

- Refer to "Glossary of Terms" on page 33 for details on minimum operating pressure differential, the maximum operating pressure differential, maximum system pressure.

Fluid and Ambient Temperature

Fluid temperature [°C]	Ambient temperature [°C]
−5 Note) to 100	−20 to 60

Note) Kinematic viscosity: 50 mm²/s or less

Valve Leakage

Internal Leakage

Seal material	Leakage rate (Oil) Note)
	VXD2A to 2D (8A to 25A)
FKM	0.2 cm³/min or less

External Leakage

Seal material	Leakage rate (Oil) Note)
	VXD2A to 2D (8A to 25A)
FKM	0.1 cm³/min or less

Note) Leakage is the value at ambient temperature 20°C.

For High temperature oil

How to Order

VXD2 3 6 A B A □

Common Specifications

Seal material	FKM

Fluid

6	High temperature oil

Size—Valve type

Symbol	Size	Valve type
3	8A 10A 15A	N.C.
A		N.O.
4	10A 15A	N.C.
B		N.O.
5	20A	N.C.
C		N.O.
6	25A	N.C.
D		N.O.

Body material/Port size/Orifice diameter

Symbol	Body material	Port size	Orifice diameter
A	C37 (Brass)	1/4	10
B		3/8	
C		1/2	
D	Stainless steel	1/4	
E		3/8	
F		1/2	
G	C37 (Brass)	3/8	15
H		1/2	
J	Stainless steel	3/8	
K		1/2	
L	C37 (Brass)	3/4	20
M	Stainless steel		
N	C37(Brass)	1	25
P	Stainless steel		

Voltage/Electrical entry (coil insulation type: Class H)

Symbol	Voltage	Electrical entry
B	100 VAC	Grommet (With surge voltage suppressor)
C	110 VAC	
D	200 VAC	
E	230 VAC	
N	100 VAC	Conduit terminal (With surge voltage suppressor)
P	110 VAC	
Q	200 VAC	
R	230 VAC	
T	100 VAC	Conduit (With surge voltage suppressor)
U	110 VAC	
V	200 VAC	
W	230 VAC	
Z1A	48 VAC	Grommet (With surge voltage suppressor)
Z1B	220 VAC	
Z1C	240 VAC	
Z1U	24 VAC	
Z1K	48 VAC	Conduit terminal (With surge voltage suppressor)
Z1L	220 VAC	
Z1M	240 VAC	
Z1W	24 VAC	
Z1P	48 VAC	Conduit (With surge voltage suppressor)
Z1Q	220 VAC	
Z1R	240 VAC	
Z1Y	24 VAC	
Z2L	100 VAC	Conduit terminal (With surge voltage suppressor, with light)
Z2M	110 VAC	
Z2N	200 VAC	
Z2P	230 VAC	
Z2Q	48 VAC	
Z2R	220 VAC	
Z2S	240 VAC	
Z2W	24 VAC	

∗ DIN terminal, Faston terminal or DC specification are not available.

With bracket

—	No
XB	Yes

∗ The bracket for aluminium, C37 (Brass) and stainless steel body type of the VXD23 is shipped together with the product, but not assembled. (Refer to the figure below for mounting.)

VXD2$^{3}_{A}$□ Bracket mounting dimensions

Port size: For 1/4, 3/8

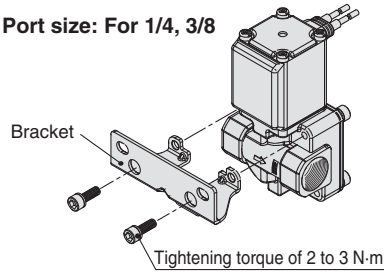

Port size: For 1/2

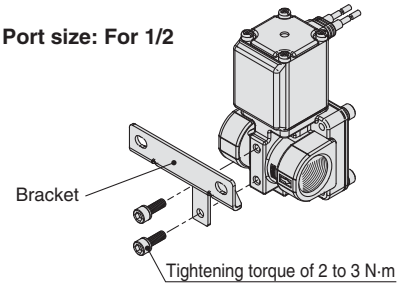

Other options

Symbol	Oil-free	Port thread
—	—	Rc
A	—	G
B		NPT
D	○	G
E		NPT
Z	○	Rc

Dimensions → Page on and after 29 (Single Unit)

Construction

Normally Closed (N.C.)

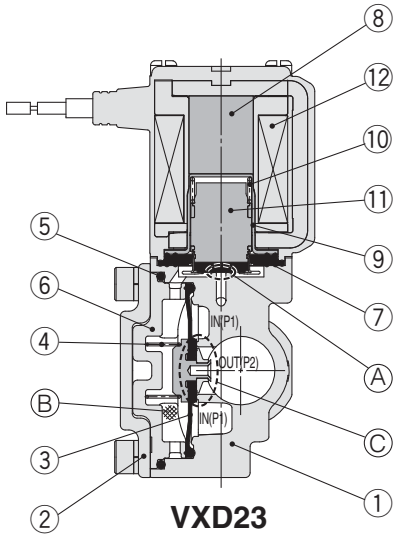

VXD23

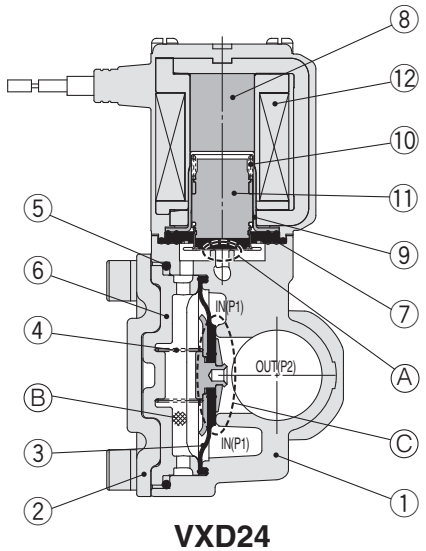

VXD24

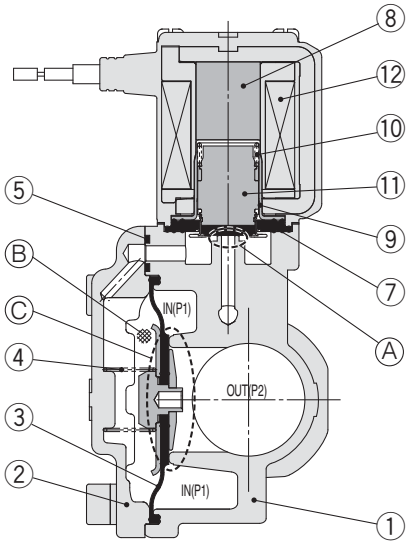

VXD25, 26

Component Parts

No.	Description	Model	Material
1	**Body**	VXD23	C37 (Brass), Stainless steel, Aluminium, Resin (PBT)
		VXD24 to 26	C37 (Brass), Stainless steel
2	**Bonnet**	VXD23, 24	Stainless steel
		VXD25, 26	C37 (Brass), Stainless steel
3	**Diaphragm assembly**	VXD23 to 26	Stainless steel, NBR, FKM, EPDM
4	**Spring**	VXD23 to 26	Stainless steel
5	**O-ring**	VXD23 to 26	NBR, FKM, EPDM
6	**Buffer**	VXD23, 24	PPS
7	**Stopper**	VXD23 to 26	NBR, FKM, EPDM
8	**Core**		Fe
9	**Tube**		Stainless steel
10	**Spring**		Stainless steel
11	**Armature assembly**		Stainless steel, NBR, FKM, EPDM, Resin (PPS)
12	**Solenoid coil**		Cu + Fe + Resin

Operation

<Valve opened>

When coil ⑫ is energized, armature assembly ⑪ is attracted by core ⑧ and pilot valveⒶis opened.
When A is opened, the pressure in pressure chamberⒷis reduced and main valveⒸis opened.

<Valve closed>

When coil ⑫ is de-energized, pilot valveⒶis closed, pressure in pressure chamberⒷincreases, and main valveⒸis closed.

Normally Open (N.O.)

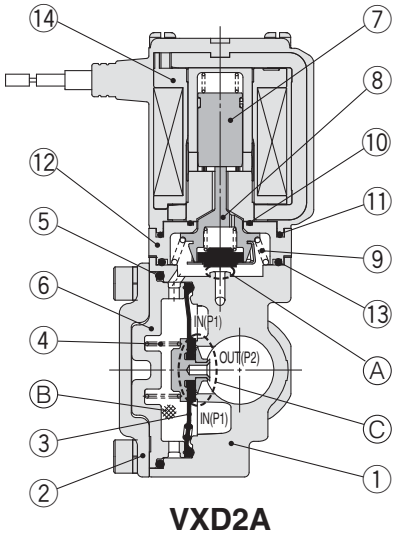

VXD2A

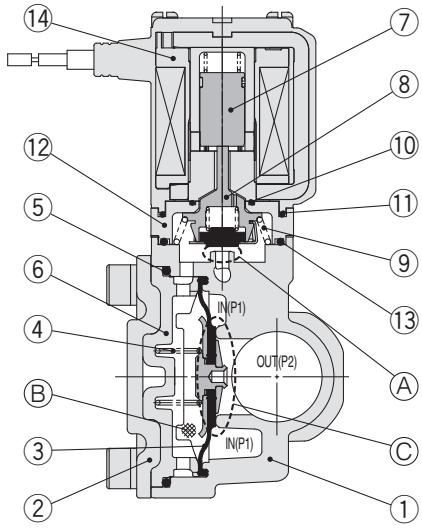

VXD2B

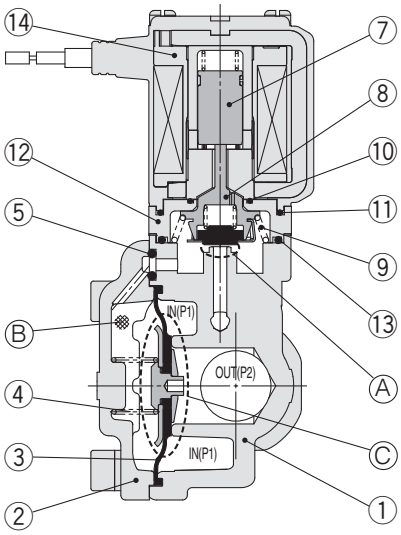

VXD2C, 2D

Component Parts

No.	Description	Model	Material
1	**Body**	VXD2A	C37 (Brass), Stainless steel, Aluminum, Resin (PBT)
		VXD2B to 2D	C37 (Brass), Stainless steel
2	**Bonnet**	VXD2A, 2B	Stainless steel
		VXD2C, 2D	C37 (Brass), Stainless steel
3	**Diaphragm assembly**	VXD2A to 2D	Stainless steel, NBR, FKM, EPDM
4	**Spring**	VXD2A to 2D	Stainless steel
5	**O-ring**	VXD2A to 2D	NBR, FKM, EPDM
6	**Buffer**	VXD2A, 2B	PPS
7	**Sleeve assembly**	VXD2A to 2D	Stainless steel, Resin (PPS)
8	**Push rod assembly**		Resin (PPS), Stainless steel, NBR, FKM, EPDM
9	**Stopper**		Stainless steel
10	**O-ring A**		NBR, FKM, EPDM
11	**O-ring B**		NBR, FKM, EPDM
12	**Adapter**		Resin (PPS)
13	**O-ring C**		NBR, FKM, EPDM
14	**Solenoid coil**		Cu + Fe + Resin

Operation

<Valve opened>

When coil ⑭ is energized, (already opened) pilot valve Ⓐ is closed, pressure in pressure chamber Ⓑ increases, and main valve Ⓒ is closed.

<Valve closed>

When coil ⑭ is de-energized, (already closed) pilot valve Ⓐ is opened, pressure in pressure chamber Ⓑ decreases, and main valve Ⓒ is opened.

Dimensions/VXD2$^{3}_{A}$ Body Material: Resin (ø10, ø3/8", ø12)

Grommet

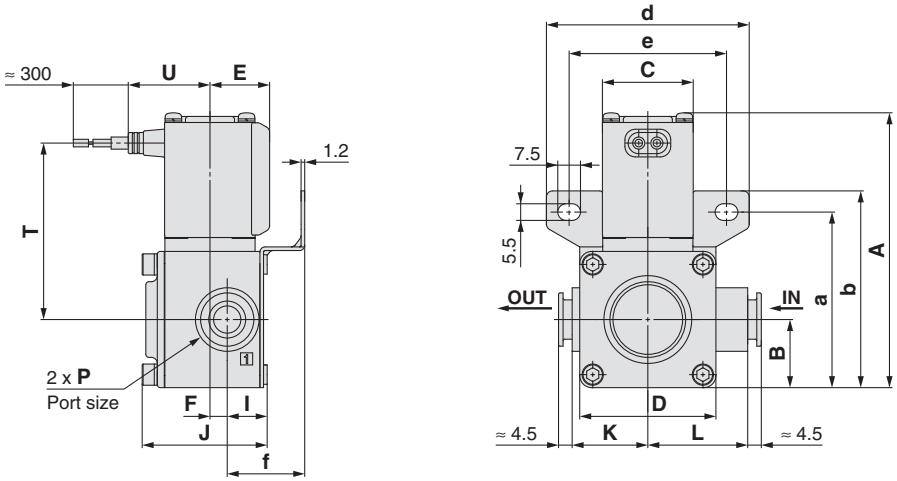

Grommet (with surge voltage suppressor)

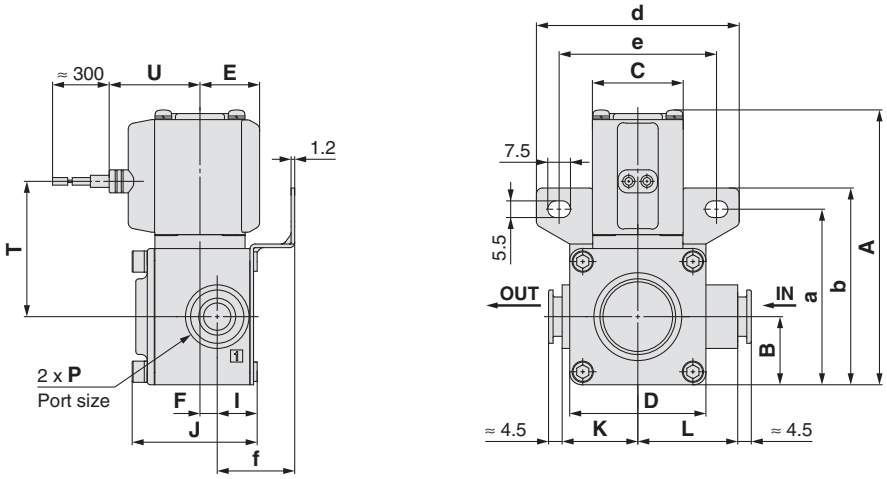

DIN terminal

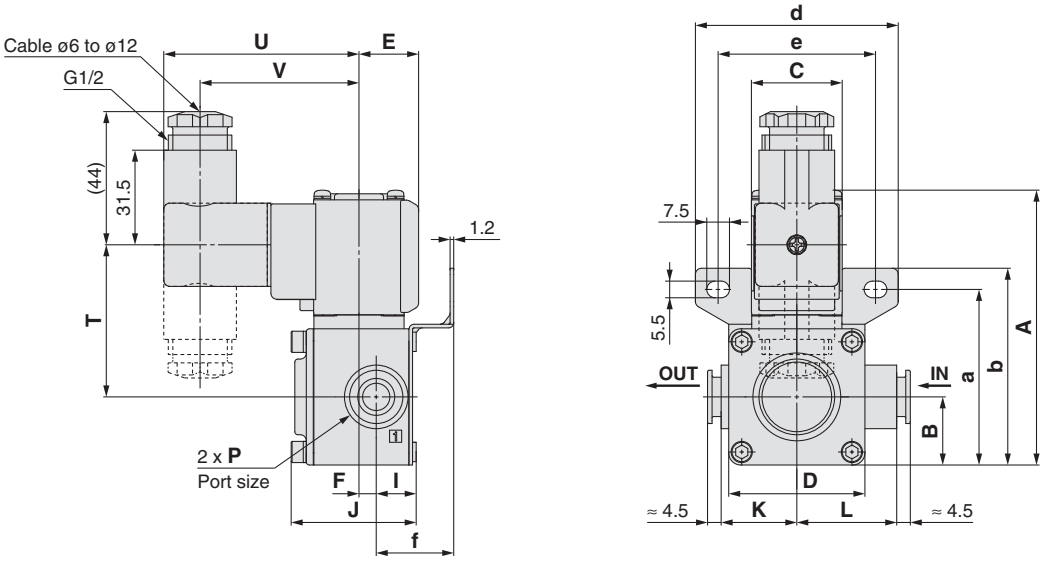

[mm]

Model	One-touch fitting P	A	B	C	D	E	F	I	J	K	L	Electrical entry						
												Grommet		Grommet (with surge voltage suppressor)		DIN terminal		
												T	U	T	U	T	U	V
VXD2$^{3}_{A}$	ø10, ø3/8", ø12	91 (97)	22.5	30	45	20	6	13.5	41.5	25	33	58.5 (64.5)	27	45 (50.5)	30	50.5 (56)	64.5	52.5

Model	One-touch fitting P	Mounting bracket dimensions				
		a	b	d	e	f
VXD2$^{3}_{A}$	ø10, ø3/8", ø12	58	65	67	52	25.5

( ): Denotes the Normally Open (N.O.) dimensions.

For Air

Dimensions/VXD2$^{3}_{A}$ Body Material: Resin (ø10, ø3/8", ø12)

Conduit terminal

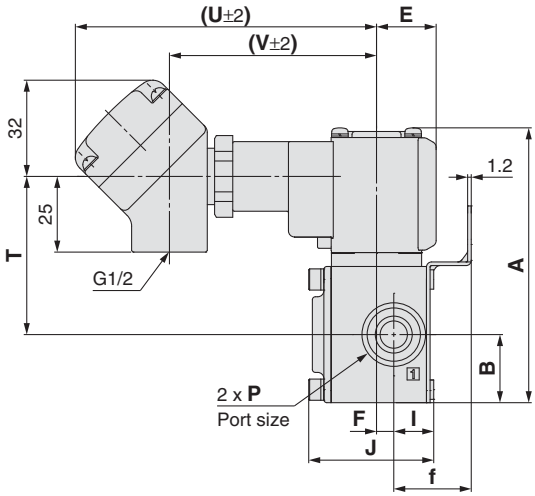

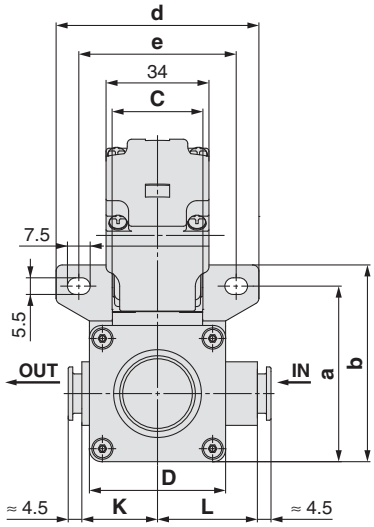

Conduit

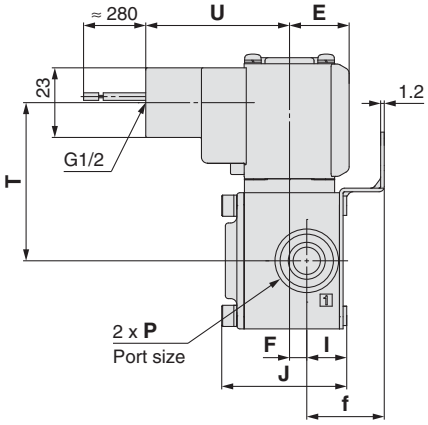

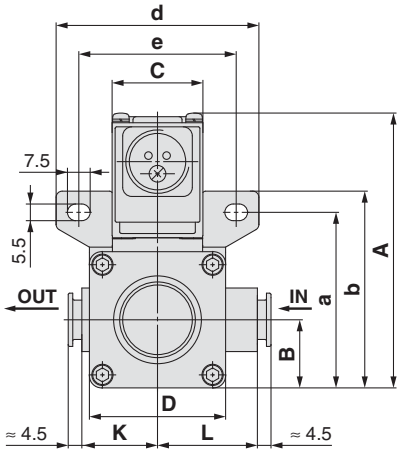

Faston terminal

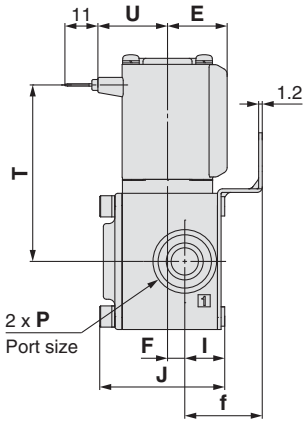

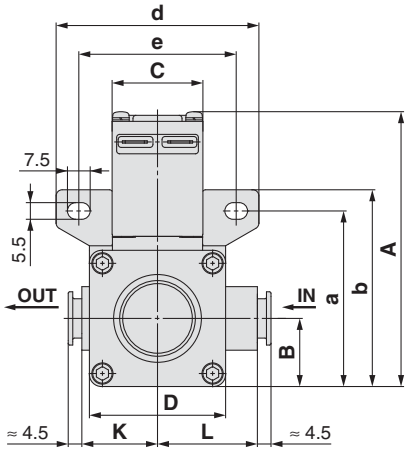

[mm]

Model	One-touch fitting P	A	B	C	D	E	F	I	J	K	L	Electrical entry						
												Conduit terminal			Conduit		Faston terminal	
												T	U	V	T	U	T	U
VXD2$^{3}_{A}$	ø10, ø3/8", ø12	91 (97)	22.5	30	45	20	6	13.5	41.5	25	33	52.5 (58)	99.5	68.5	52.5 (58)	47.5	58.5 (64.5)	23

Model	One-touch fitting P	Mounting bracket dimensions				
		a	b	d	e	f
VXD2$^{3}_{A}$	ø10, ø3/8", ø12	58	65	67	52	25.5

( ): Denotes the Normally Open (N.O.) dimensions.

Dimensions/VXD2$^{3}_{A}$ Body Material: Aluminium, C37 (Brass), Stainless Steel

Grommet

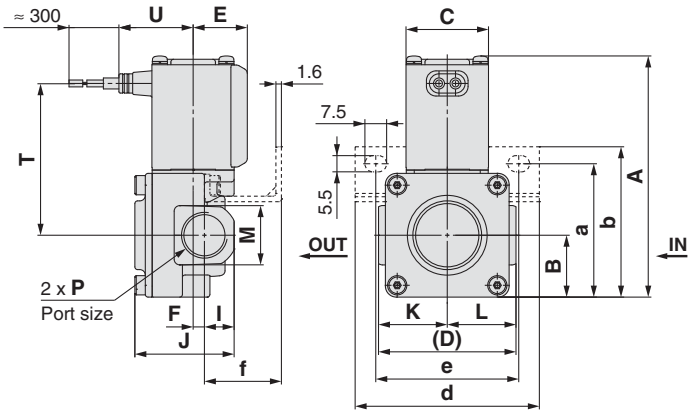

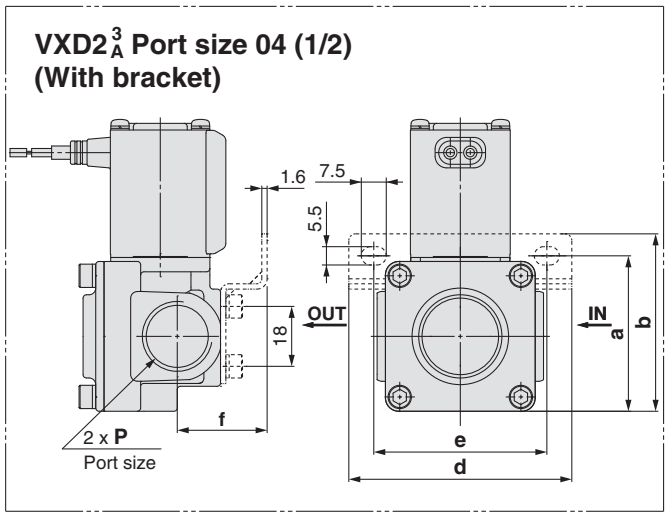

Grommet (with surge voltage suppressor)

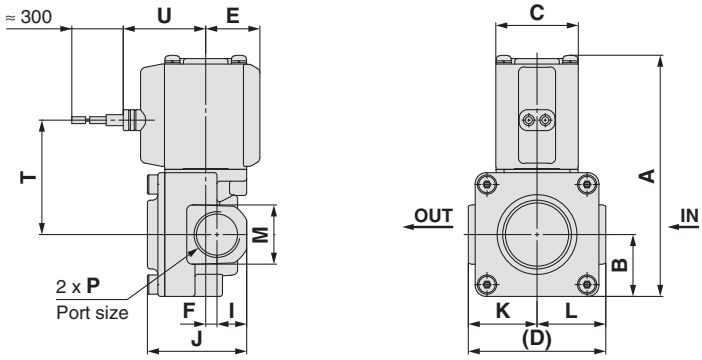

DIN terminal

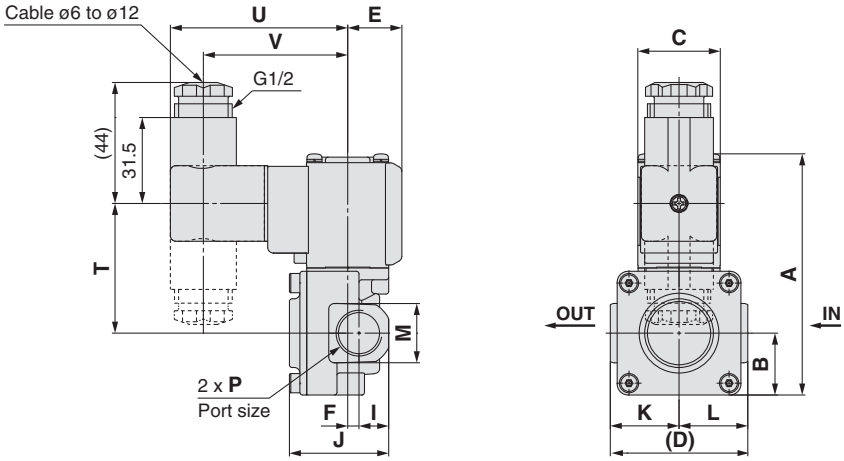

[mm]

Model	Port size P	A	B	C	D	E	F	I	J	K	L	M: C37 (Brass), Stainless steel body	M: Aluminium body type	Electrical entry: Grommet T	Grommet U	Grommet (with surge voltage suppressor) T	Grommet (with surge voltage suppressor) U	DIN terminal T	DIN terminal U	DIN terminal V
VXD2$^{3}_{A}$	1/4, 3/8	88 (93.5)	22.5	30	50	20	4.5	11	37.5	25	25	22	24	55.5 (61)	27	42 (47.5)	30	47.5 (53)	64.5	52.5
	1/2						5	13	42.5			27	30							

Model	Port size P	Mounting bracket dimensions a	b	d	e	f
VXD2$^{3}_{A}$	1/4, 3/8	48.5	55	67	52	28
	1/2	47	53.5			27

( ): Denotes the Normally Open (N.O.) dimensions.
Aluminium body is for air. Refer to page 4 for details.

For Air/Water/Oil

Dimensions/VXD2 $^{3}_{A}$ Body Material: Aluminium, C37 (Brass), Stainless Steel

Conduit terminal

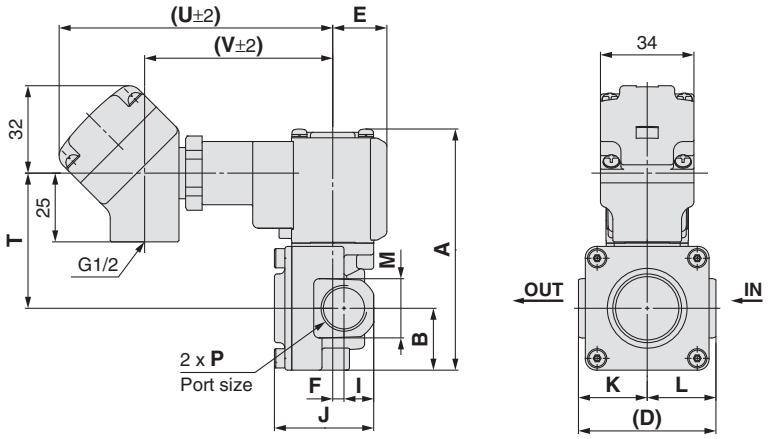

Conduit

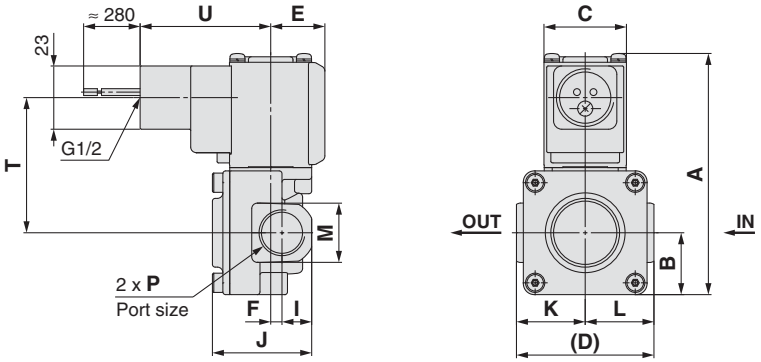

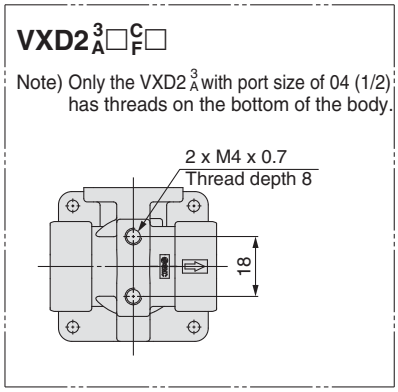

Faston terminal

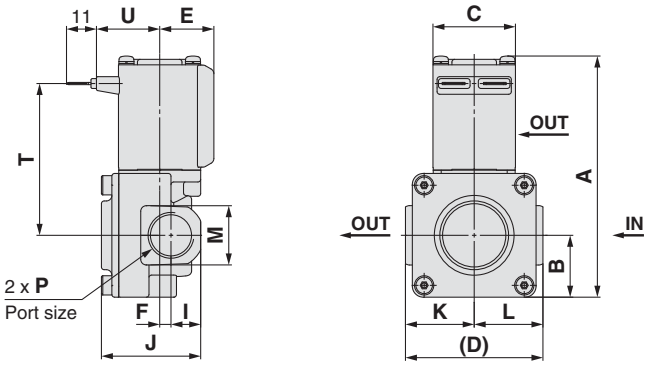

[mm]

Model	Port size P	A	B	C	D	E	F	I	J	K	L	M	Electrical entry						
													Conduit terminal			Conduit		Faston terminal	
													T	U	V	T	U	T	U
VXD2 $^{3}_{A}$	1/4, 3/8	88 (93.5)	22.5	30	50	20	4.5	11	37.5	25	25	22	49.5 (55)	99.5	68.5	49.5 (55)	47.5	55.5 (61)	23
	1/2						5	13	42.5			27							

( ): Denotes the Normally Open (N.O.) dimensions.
Aluminium body is for air. Refer to page 4 for details.

Dimensions/VXD2$^{4}_{B}$ Body Material: C37 (Brass), Stainless Steel

Grommet

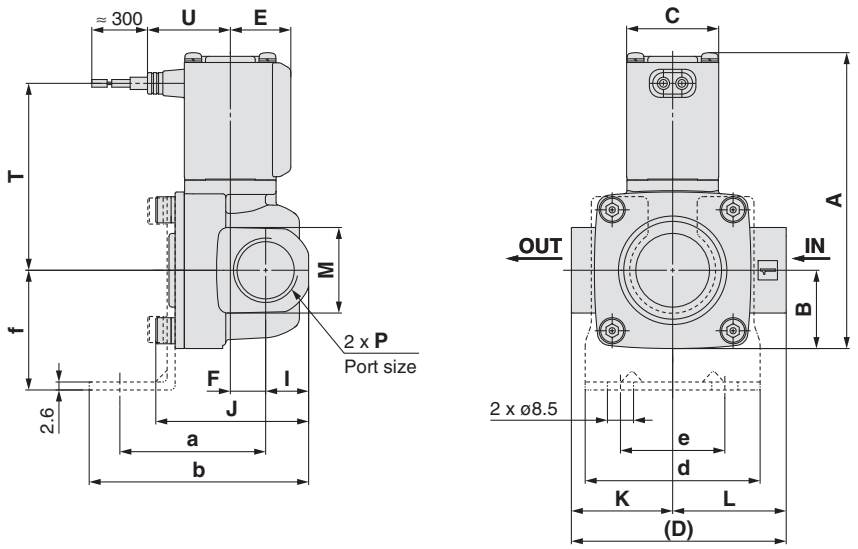

Grommet (with surge voltage suppressor)

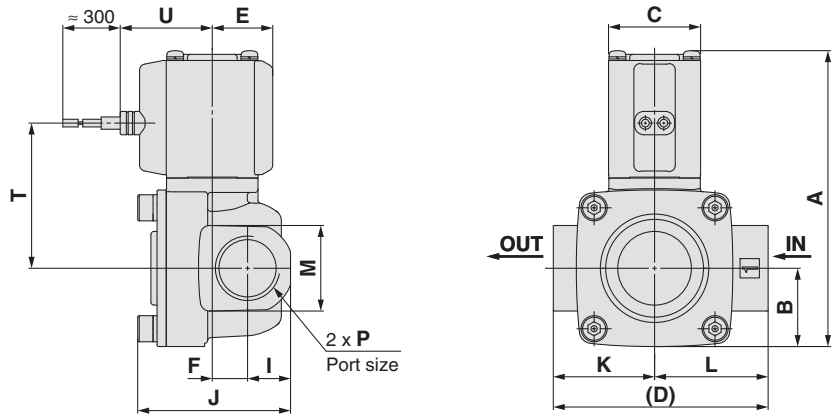

DIN terminal

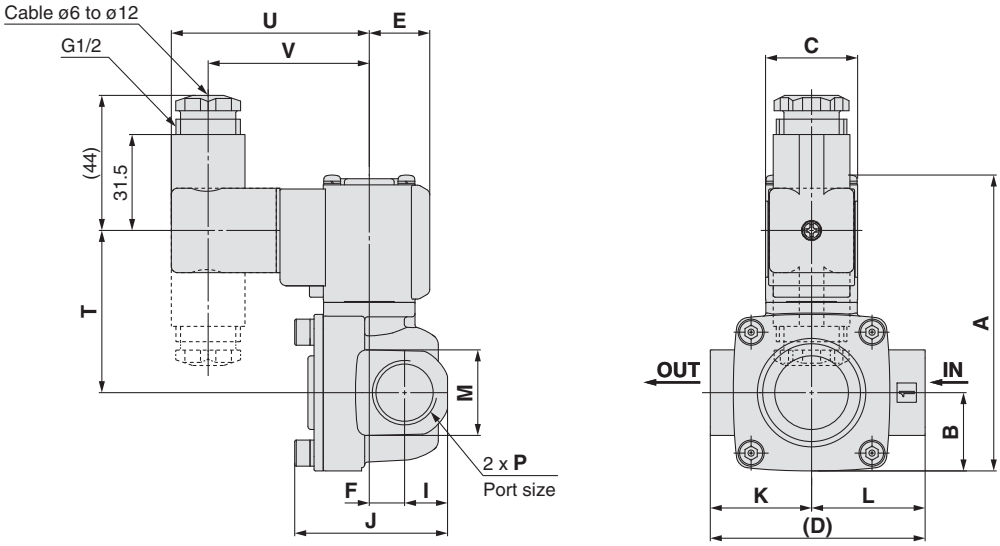

[mm]

Model	Port size P	A	B	C	D	E	F	I	J	K	L	M	Electrical entry: Grommet T	Grommet U	Grommet (with surge voltage suppressor) T	Grommet (with surge voltage suppressor) U	DIN terminal T	DIN terminal U	DIN terminal V
VXD2$^{4}_{B}$	3/8, 1/2	96.5 (102.5)	25.5	30	70	20	11.5	14	50	33	37	28	61 (67)	27	47.5 (53.5)	30	53 (59)	64.5	52.5

Model	Port size P	Mounting bracket dimensions: a	b	d	e	f
VXD2$^{4}_{B}$	3/8, 1/2	47.5	71.5	57	34	39

( ): Denotes the Normally Open (N.O.) dimensions.

For Air/Water/Oil

Dimensions/VXD2$^{4}_{B}$ Body Material: C37 (Brass), Stainless Steel

Conduit terminal

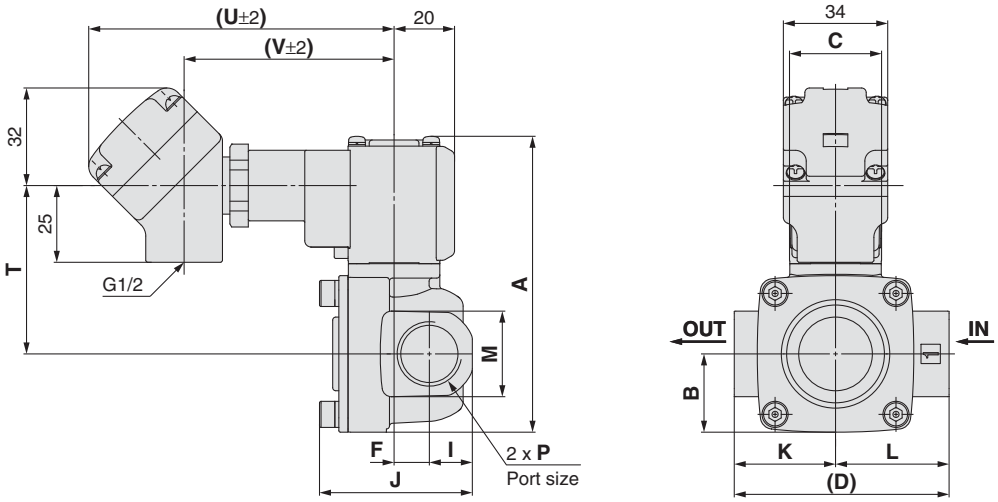

Conduit

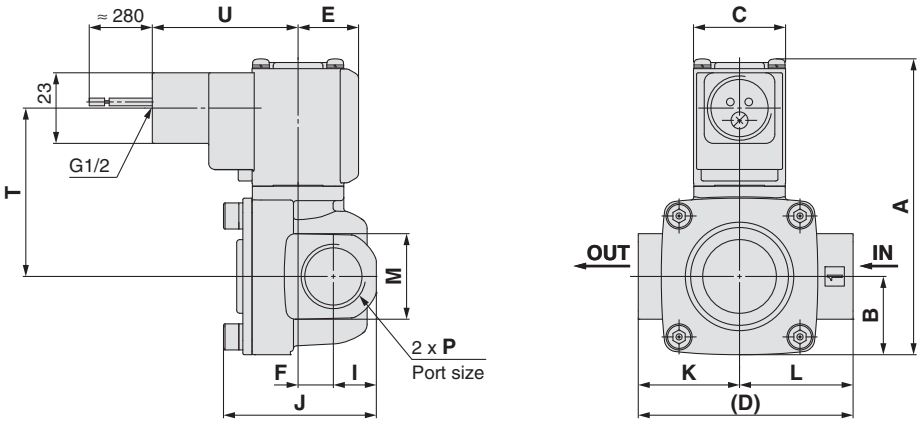

Faston terminal

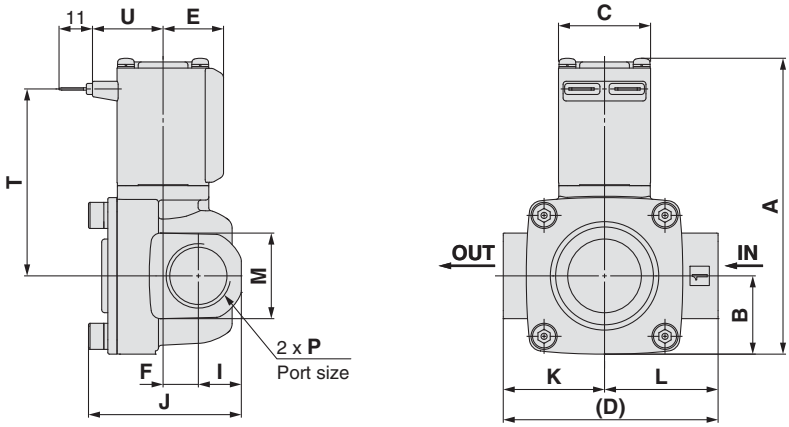

[mm]

Model	Port size P	A	B	C	D	E	F	I	J	K	L	M	Electrical entry						
													Conduit terminal			Conduit		Faston terminal	
													T	U	V	T	U	T	U
VXD2$^{4}_{B}$	3/8, 1/2	96.5 (102.5)	25.5	30	70	20	11.5	14	50	33	37	28	55 (61)	99.5	68.5	55 (61)	47.5	61 (67)	23

( ): Denotes the Normally Open (N.O.) dimensions.

Dimensions/VXD2$^{5}_{C}$/2$^{6}_{D}$ Body Material: C37 (Brass), Stainless Steel

Grommet

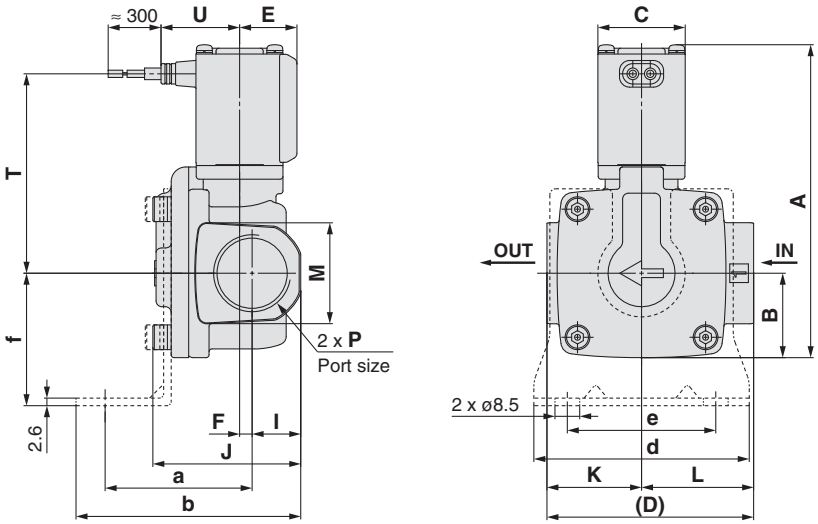

Grommet (with surge voltage suppressor)

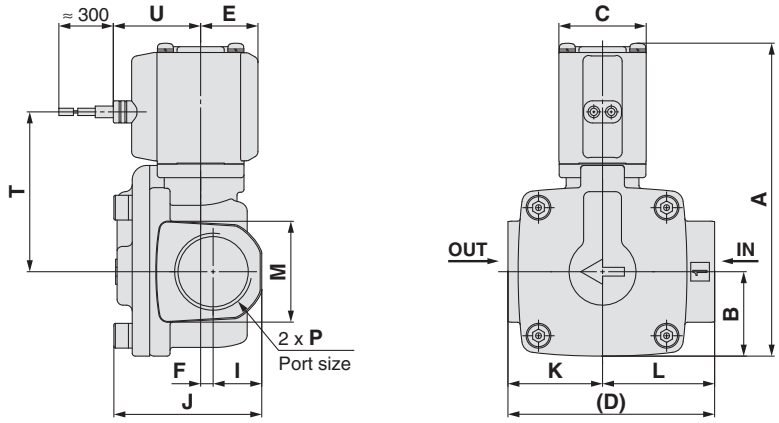

DIN terminal

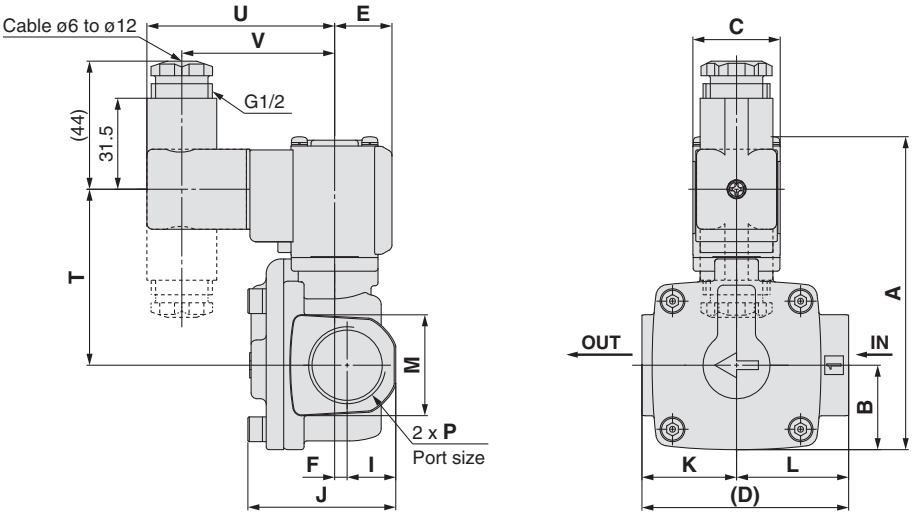

[mm]

Model	Port size P	A	B	C	D	E	F	I	J	K	L	M	Electrical entry: Grommet T	Grommet U	Grommet (with surge voltage suppressor) T	Grommet (with surge voltage suppressor) U	DIN terminal T	DIN terminal U	DIN terminal V
VXD2$^{5}_{C}$	3/4	107.5 (113.5)	29	30	71	20	4.5	17	51	32.5	38.5	35	68.5 (74.5)	27	55 (61)	30	60.5 (66.5)	64.5	52.5
VXD2$^{6}_{D}$	1	126.5 (134.5)	33	35	95	22	4.5	20	59.5	45.5	49.5	42	82.5 (90.5)	29.5	69 (77)	32.5	74.5 (82.5)	67	55

Model	Port size P	Mounting bracket dimensions: a	b	d	e	f
VXD2$^{5}_{C}$	3/4	50.5	77.5	74	51	45.5
VXD2$^{6}_{D}$	1	55.5	85.5	81	58	49.5

( ): Denotes the Normally Open (N.O.) dimensions.

For Air/Water/Oil

Dimensions/VXD2$^{5}_{C}$/2$^{6}_{D}$ Body Material: C37 (Brass), Stainless Steel

Conduit terminal

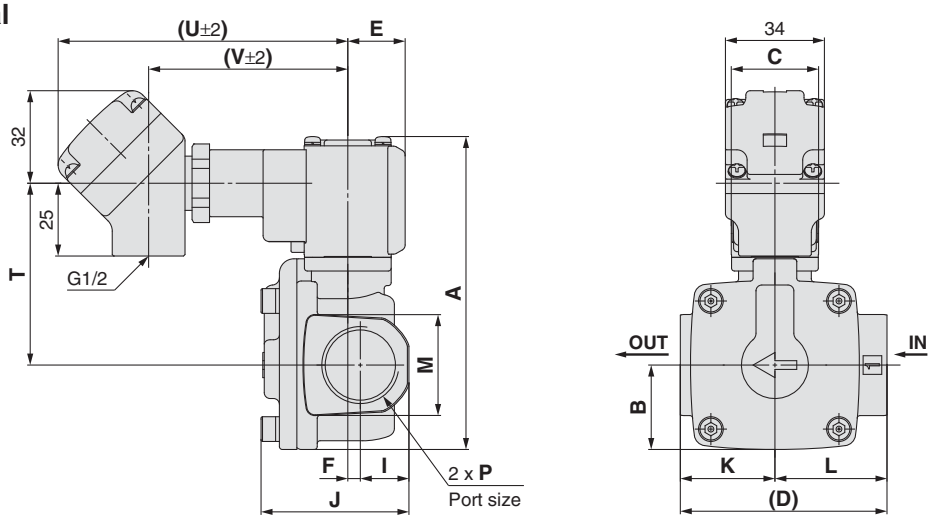

Conduit

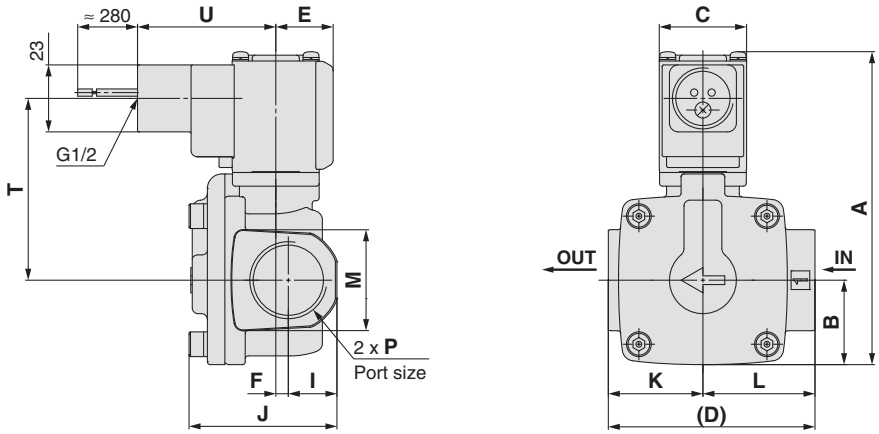

Faston terminal

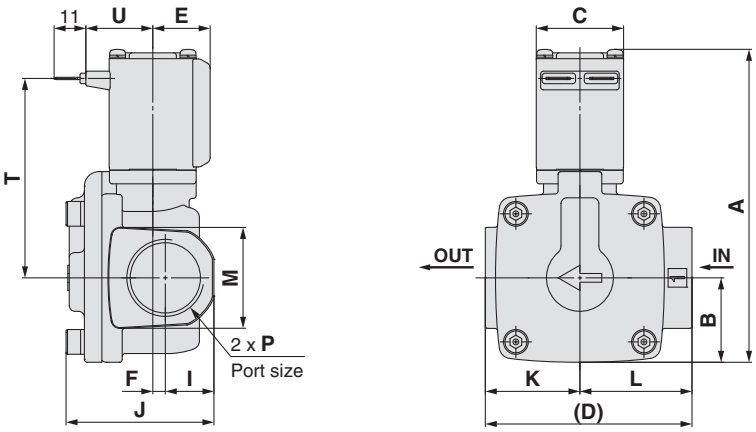

[mm]

Model	Port size P	A	B	C	D	E	F	I	J	K	L	M	Electrical entry						
													Conduit terminal			Conduit		Faston terminal	
													T	U	V	T	U	T	U
VXD2$^{5}_{C}$	3/4	107.5 (113.5)	29	30	71	20	4.5	17	51	32.5	38.5	35	62.5 (68.5)	99.5	68.5	62.5 (68.5)	47.5	68.5 (74.5)	23
VXD2$^{6}_{D}$	1	126.5 (134.5)	33	35	95	22	4.5	20	59.5	45.5	49.5	42	76.5 (84.5)	102	71	76.5 (84.5)	50	82.5 (90.5)	25.5

Model	Port size P	Mounting bracket dimensions				
		a	b	d	e	f
VXD2$^{5}_{C}$	3/4	50.5	77.5	74	51	45.5
VXD2$^{6}_{D}$	1	55.5	85.5	81	58	49.5

( ): Denotes the Normally Open (N.O.) dimensions.

Dimensions/VXD2$^{3}_{A}$ Body Material: C37 (Brass), Stainless Steel (1/4, 3/8, 1/2)

Grommet

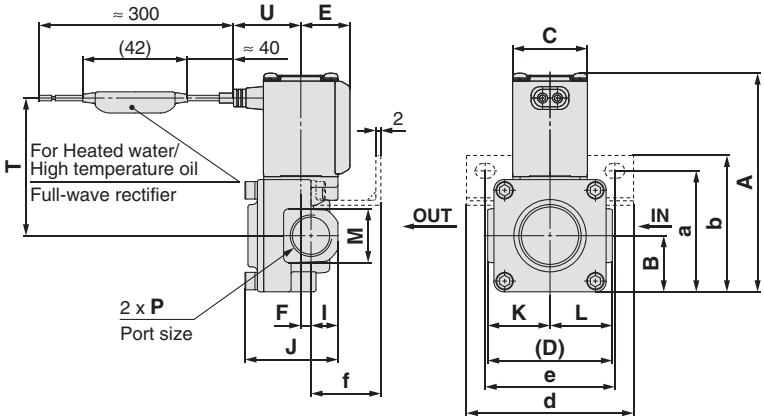

VXD2$^{3}_{A}$ Port size 04 (1/2) (With bracket)

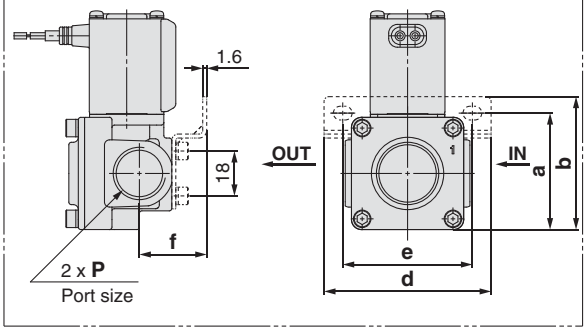

Conduit terminal

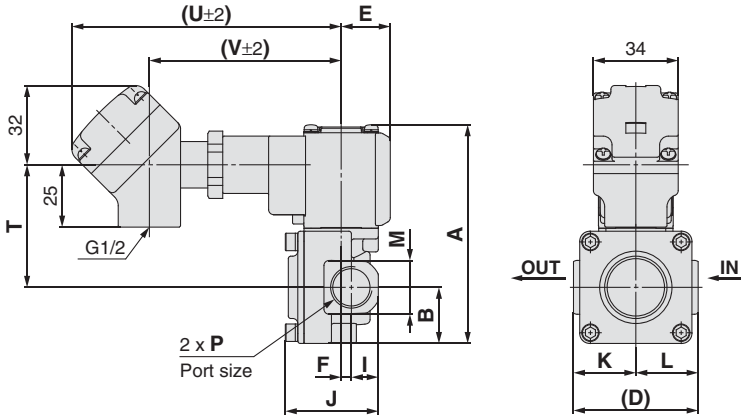

VXD2$^{3}_{A}$□$^{C}_{F}$□

Note) Only the VXD2$^{3}_{A}$ with port size of 04 (1/2) has threads on the bottom of the body.

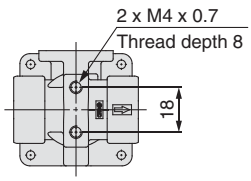

Conduit

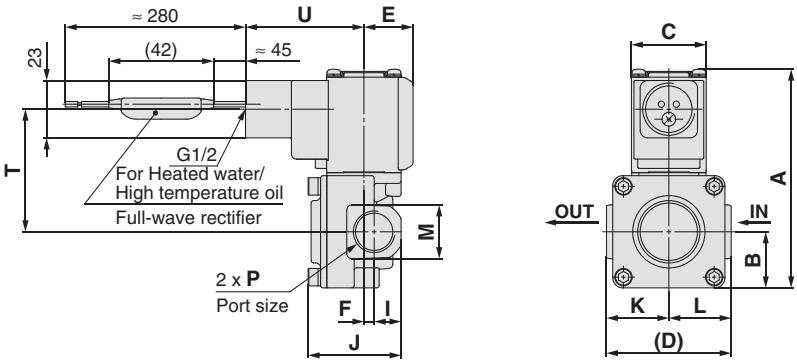

[mm]

Model	Port size P	A	B	C	D	E	F	I	J	K	L	M	Electrical entry						
													Grommet		Conduit terminal			Conduit	
													T	U	T	U	V	T	U
VXD2$^{3}_{A}$	1/4, 3/8	88 (93.5)	22.5	30	50	20	4.5	11	37.5	25	25	22	55.5 (61)	27	49.5 (55)	108	77	49.5 (55)	47.5
	1/2						5	13	42.5			27							

Model	Port size P	Mounting bracket dimensions				
		a	b	d	e	f
VXD2$^{3}_{A}$	1/4, 3/8	48.5	55	67	52	28
	1/2	47	53.5			27

( ): Denotes the Normally Open (N.O.) dimensions.

For Heated water/High temperature oil

Dimensions/VXD2$^{4}_{B}$ Body Material: C37 (Brass), Stainless Steel

Grommet

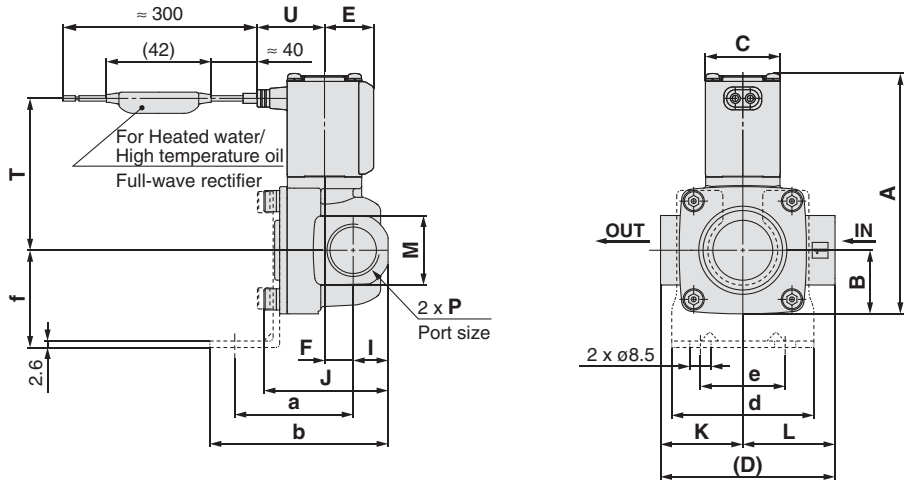

Conduit terminal

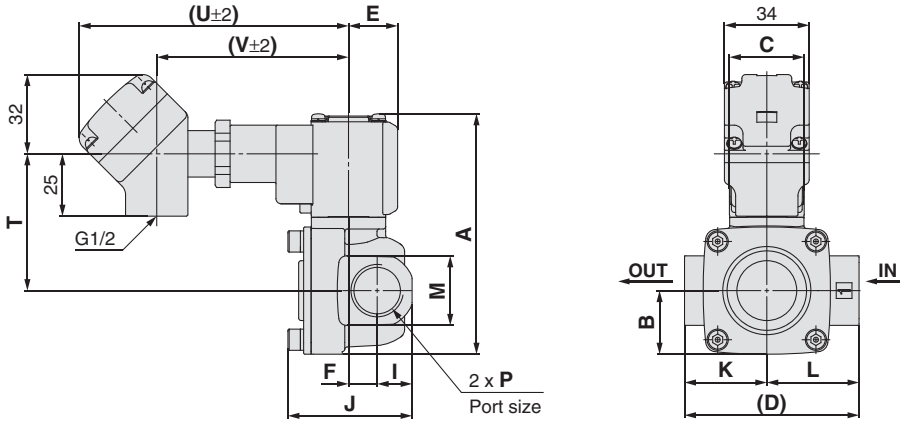

Conduit

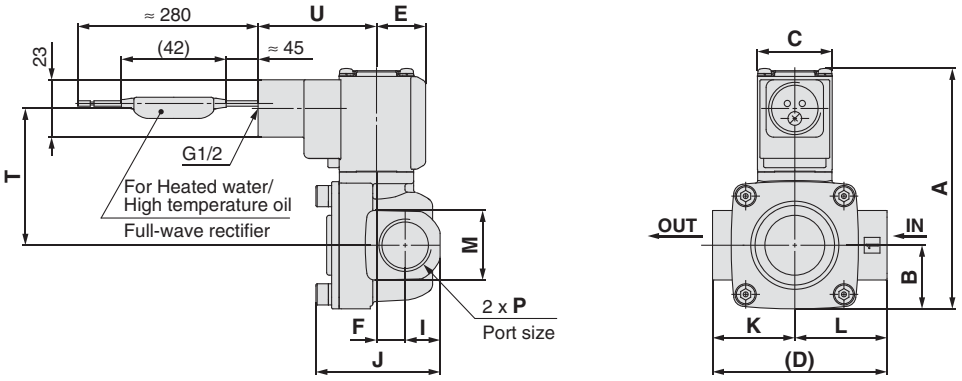

[mm]

Model	Port size P	A	B	C	D	E	F	I	J	K	L	M	Electrical entry						
													Grommet		Conduit terminal			Conduit	
													T	U	T	U	V	T	U
VXD2$^{4}_{B}$	3/8, 1/2	96.5 (102.5)	25.5	30	70	20	11.5	14	50	33	37	28	61 (67)	27	55 (61)	108	77	55 (61)	47.5

Model	Port size P	Mounting bracket dimensions				
		a	b	d	e	f
VXD2$^{4}_{B}$	3/8, 1/2	47.5	71.5	57	34	39

( ): Denotes the Normally Open (N.O.) dimensions.

Dimensions/VXD2$^{5}_{C}$/2$^{6}_{D}$ Body Material: C37 (Brass), Stainless Steel

Grommet

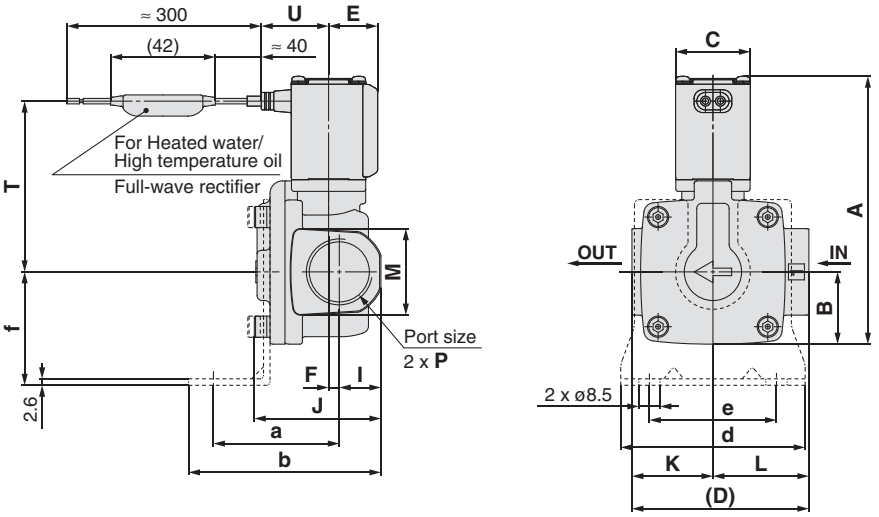

Conduit terminal

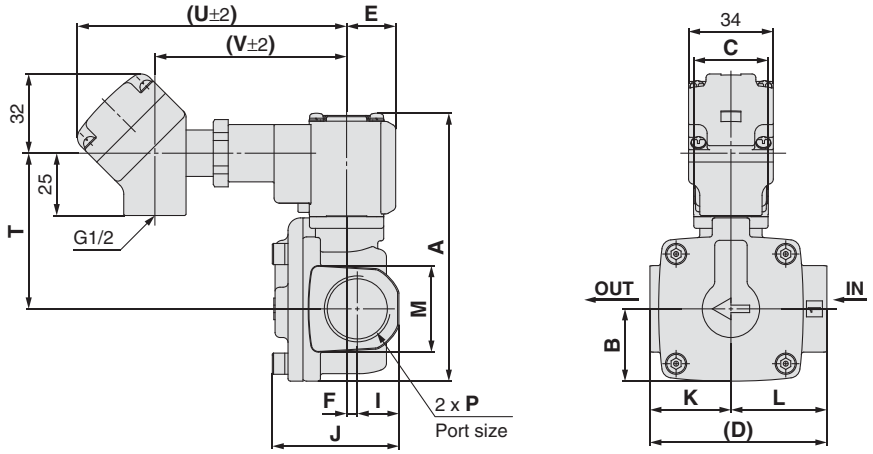

Conduit

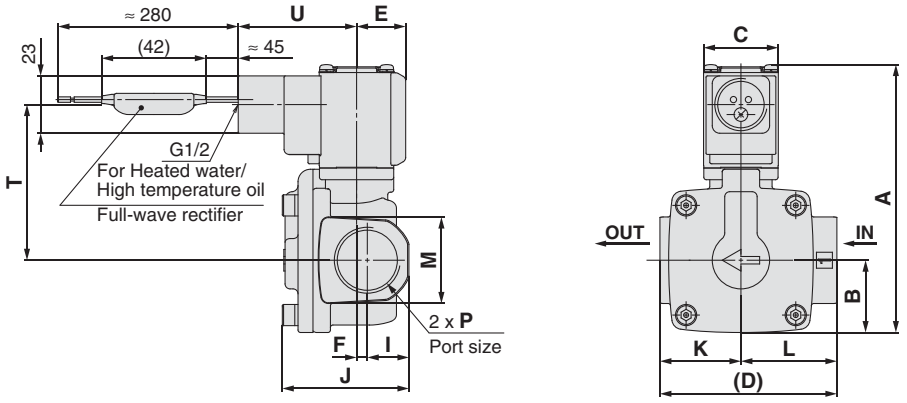

[mm]

Model	Port size P	A	B	C	D	E	F	I	J	K	L	M	Electrical entry						
													Grommet		Conduit terminal			Conduit	
													T	U	T	U	V	T	U
VXD2$^{5}_{C}$	3/4	107.5 (113.5)	29	30	71	20	4.5	17	51	32.5	38.5	35	68.5 (74.5)	27	62.5 (68.5)	108	77	62.5 (68.5)	47.5
VXD2$^{6}_{D}$	1	126.5 (134.5)	33	35	95	22	4.5	20	59.5	45.5	49.5	42	82.5 (90.5)	29.5	76.5 (84.5)	110.5	79.5	76.5 (84.5)	50

Model	Port size P	Mounting bracket dimensions				
		a	b	d	e	f
VXD2$^{5}_{C}$	3/4	50.5	77.5	74	51	45.5
VXD2$^{6}_{D}$	1	55.5	85.5	81	58	49.5

( ): Denotes the Normally Open (N.O.) dimensions.

Replacement Parts No.

- **DIN Connector**

Without electrical option **C18312G6GCU**

With electrical option (light) **GDM2A−L□**

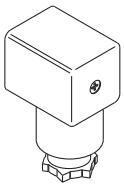

Electrical option

L	With light

Rated voltage

1	100 VAC, 110 VAC
2	200 VAC, 220 VAC 230 VAC, 240 VAC
5	24 VDC
6	12 VDC
13	24 VAC
15	48 VAC

- **Gasket for DIN Connector**

VCW20-1-29-1

- **Lead Wire Assembly for Faston Terminal (Set of 2 pcs.)**

VX021S-1-16FB

- **Bracket Assembly for the VXD2 3/A Metal Body (C37 (Brass), Stainless steel, Aluminium)**

Port size: For 1/4, 3/8 **VXD30S-14A-1**

Port size: For 1/2 **VXD30S-14A-3**

∗ 2 mounting screws (M3 hexagon socket head cap screws) are shipped together with the bracket assembly, but not assembled.

Glossary of Terms

Pressure Terminology

1. Maximum operating pressure differential

The maximum pressure differential (the difference between the inlet and outlet pressure) which is allowed for operation. When the outlet pressure is 0 MPa, this becomes the maximum operating pressure.

2. Minimum operating pressure differential

The minimum pressure differential (the difference between the inlet pressure and outlet pressure) required to keep the main valve fully opened.

3. Maximum system pressure

The maximum pressure that can be applied inside the pipelines (line pressure).
[The pressure differential in the solenoid valve portion must be below the maximum operating pressure differential.]

4. Withstand pressure

The pressure in which the valve must be withstood without a drop in performance after holding for one minute under prescribed (static) pressure and returning to the operating pressure range. [value under the prescribed conditions]

Electrical Terminology

1. Surge voltage

A high voltage which is momentarily generated by shutting off the power in the shut-off area.

2. Enclosure

A degree of protection defined in the "JIS C 0920: Waterproof test of electric machinery/appliance and the degree of protection against the intrusion of solid foreign objects."

Verify the degree of protection for each product.

● **First Characteristics:**
Degrees of protection against solid foreign objects

0	Non-protected
1	Protected against solid foreign objects of 50 mmø and greater
2	Protected against solid foreign objects of 12 mmø and greater
3	Protected against solid foreign objects of 2.5 mmø and greater
4	Protected against solid foreign objects of 1.0 mmø and greater
5	Dust-protected
6	Dust-tight

● **Second Characteristics:**
Degrees of protection against water

0	Non-protected	—
1	Protected against vertically falling water drops	Dripproof type 1
2	Protected against vertically falling water drops when enclosure tilted up to 15°	Dripproof type 2
3	Protected against rainfall when enclosure tilted up to 60°	Rainproof type
4	Protected against splashing water	Splashproof type
5	Protected against water jets	Water-jet-proof type
6	Protected against powerful water jets	Powerful water-jet-proof type
7	Protected against the effects of temporary immersion in water	Immersible type
8	Protected against the effects of continuous immersion in water	Submersible type

Example) IP65: Dust-tight, Water-jet-proof type
"Water-jet-proof type" means that no water intrudes inside an equipment that could hinder from operating normally by means of applying water for 3 minutes in the prescribed manner. Take appropriate protection measures, since a device is not usable in an environment where a droplet of water is splashed constantly.

Others

1. Material

NBR: Nitrile rubber
FKM: Fluoro rubber – Trade names: Viton®, Dai-el®, etc.
EPDM: Ethylene-propylene rubber

2. Oil-free treatment

The degreasing and washing of wetted parts

3. Symbol

In the symbol ( ) Port 1 (IN) and Potr 2 (OUT) are shown in a blocked condition ( ), but it is not possible to use the valve in cases of reverse pressure, where the Port 2 pressure is higher than the Port 1 pressure.

Faston Terminal

1. Faston™ is a trademark of Tyco Electronics Corp.

2. For electrical connection of the Faston terminal and molded coil, please use Tyco's "Amp/Faston connector/250 Series" or the equivalent.

Solenoid Valve Flow-rate Characteristics
(How to indicate flow-rate characteristics)

1. Indication of flow-rate characteristics

The flow-rate characteristics in equipment such as a solenoid valve etc. are indicated in their specifications as shown in Table (1).

Table (1) Indication of Flow-rate Characteristics

Corresponding equipment	Indication by international standard	Other indications	Conformed standard
Pneumatic equipment	***C*, *b***	—	ISO 6358: 1989 JIS B 8390: 2000
	—	***S***	JIS B 8390: 2000 Equipment: JIS B 8373, 8374, 8375, 8379, 8381
		Cv	ANSI/(NFPA)T3.21.3: 1990
Process fluid control equipment	***Av***	—	IEC60534-2-3: 1997 JIS B 2005: 1995 Equipment: JIS B 8471, 8472, 8473
	—	***Cv***	

2. Pneumatic equipment

2.1 Indication according to the international standards

(1) Conformed standard

ISO 6358: 1989 : Pneumatic fluid power—Components using compressible fluids—Determination of flow-rate characteristics

JIS B 8390: 2000 : Pneumatic fluid power—Components using compressible fluids—How to test flow-rate characteristics

(2) Definition of flow-rate characteristics

The flow-rate characteri stics are indicated as a result of a comparison between sonic conductance ***C*** and critical pressure ratio ***b***.

Sonic conductance ***C*** : Value which divides the passing mass flow rate of an equipment in a choked flow condition by the product of the upstream absolute pressure and the density in a standard condition.

Critical pressure ratio ***b***: Pressure ratio (downstream pressure/upstream pressure) which will turn to a choked flow when the value is smaller than this ratio.

Choked flow : The flow in which the upstream pressure is higher than the downstream pressure and where sonic speed in a certain part of an equipment is reached.
Gaseous mass flow rate is in proportion to the upstream pressure and not dependent on the downstream pressure.

Subsonic flow : Flow greater than the critical pressure ratio

Standard condition : Air in a temperature state of 20°C, absolute pressure 0.1 MPa (= 100 kPa = 1 bar), relative humidity 65%.
It is stipulated by adding the "(ANR)" after the unit depicting air volume.
(standard reference atmosphere)
Conformed standard: ISO 8778: 1990 Pneumatic fluid power—Standard reference atmosphere, JIS B 8393: 2000: Pneumatic fluid power—Standard reference atmosphere

(3) Formula for flow rate

Described by the practical units as following.

When $\frac{P_2 + 0.1}{P_1 + 0.1} \leq b$, **choked flow**

$$Q = 600 \times C\,(P_1 + 0.1)\sqrt{\frac{293}{273 + t}} \quad \cdots\cdots (1)$$

When $\frac{P_2 + 0.1}{P_1 + 0.1} > b$, **subsonic flow**

$$Q = 600 \times C\,(P_1 + 0.1)\sqrt{1 - \left[\frac{\frac{P_2 + 0.1}{P_1 + 0.1} - b}{1 - b}\right]^2}\sqrt{\frac{293}{273 + t}} \quad \cdots\cdots (2)$$

Q: Air flow rate [dm^3/min (ANR)], dm^3 (cubic decimetre) of SI unit are allowed to be described by L (litre).

1 dm^3 = 1 L

C : Sonic conductance [dm³/(s·bar)]
b : Critical pressure ratio [—]
P_1 : Upstream pressure [MPa]
P_2 : Downstream pressure [MPa]
t : Temperature [°C]
Note) Formula of subsonic flow is the elliptic analogous curve.
Flow-rate characteristics are shown in Graph (1). For details, please make use of SMC's "Energy Saving Program".

Example)
Obtain the air flow rate for P_1 = 0.4 [MPa], P_2 = 0.3 [MPa], ***t*** = 20 [°C] when a solenoid valve is performed in ***C*** = 2 [dm³/(s·bar)] and ***b*** = 0.3.

According to formula (1), the maximum flow rate = 600 x 2 x (0.4 + 0.1) x $\sqrt{\dfrac{293}{273 + 20}}$ = 600 [dm³/min (ANR)]

Pressure ratio = $\dfrac{0.3 + 0.1}{0.4 + 0.1}$ = 0.8

Based on Graph (1), the flow rate ratio will be 0.7 when the pressure ratio is 0.8 and ***b*** = 0.3.
Therefore, flow rate = Maximum flow rate x flow rate ratio = 600 x 0.7 = 420 [dm³/min(ANR)]

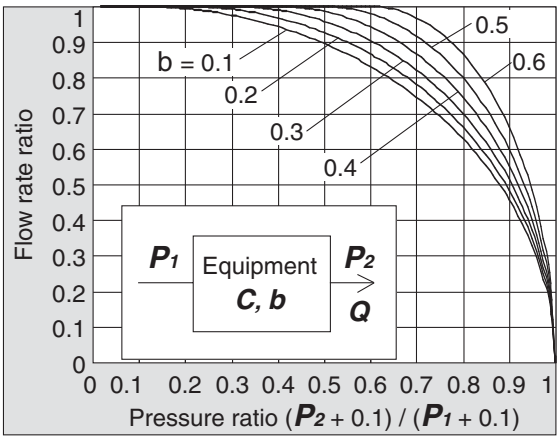

Graph (1) Flow-rate characteristics

(4) Test method
Attach a test equipment with the test circuit shown in Fig. (1) while maintaining the upstream pressure to a certain level which does not go below 0.3 MPa. Next, measure the maximum flow to be saturated in the first place, then measure this flow rate at 80%, 60%, 40%, 20% and the upstream and downstream pressure. And then, obtain the sonic conductance ***C*** from this maximum flow rate. Besides that, substitute each data of others for the subsonic flow formula to find ***b***, then obtain the critical pressure ratio ***b*** from that average.

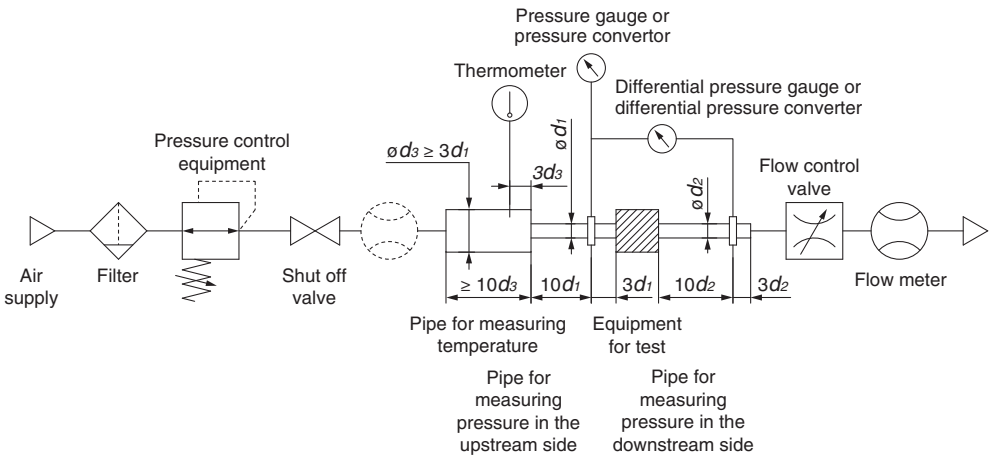

Fig. (1) Test circuit based on ISO 6358, JIS B 8390

2.2 Effective area *S*

(1) Conformed standard

JIS B 8390: 2000: Pneumatic fluid power—Components using compressible fluids—How to test flow-rate characteristics

Equipment standards: JIS B 8373: 2 port solenoid valve for pneumatics
JIS B 8374: 3 port solenoid valve for pneumatics
JIS B 8375: 4 port, 5 port solenoid valve for pneumatics
JIS B 8379: Silencer for pneumatics
JIS B 8381: Fittings of flexible joint for pneumatics

(2) Definition of flow-rate characteristics

Effective area ***S***: The cross-sectional area having an ideal throttle without friction or without reduced flow. It is deduced from the calculation of the pressure changes inside an air tank when discharging the compressed air in a choked flow, from an equipment attached to the air tank. This is the same concept representing the "easy to run through" as sonic conductance ***C***.

(3) Formula for flow rate

When $\frac{P_2 + 0.1}{P_1 + 0.1} \leq 0.5$, **choked flow**

$$Q = 120 \times S\,(P_1 + 0.1)\sqrt{\frac{293}{273 + t}} \quad \cdots\cdots (3)$$

When $\frac{P_2 + 0.1}{P_1 + 0.1} > 0.5$, **subsonic flow**

$$Q = 240 \times S\sqrt{(P_2 + 0.1)\ (P_1 - P_2)}\sqrt{\frac{293}{273 + t}} \quad \cdots\cdots (4)$$

Conversion with sonic conductance ***C***:

$$S = 5.0 \times C \quad \cdots\cdots (5)$$

Q : Air flow rate [dm^3/min(ANR)], dm^3 (cubic decimetre) of SI unit are allowed to be described by L (litre).
1 dm^3 = 1 L
S : Effective area [mm^2]
P_1 : Upstream pressure [MPa]
P_2 : Downstream pressure [MPa]
t : Temperature [°C]

Note) Formula for subsonic flow (4) is only applicable when the critical pressure ratio ***b*** is unknown for equipment. In the formula (2) by the sonic conductance ***C***, it is the same formula as when ***b*** = 0.5.

(4) Test method

Attach a test equipment with the test circuit shown in Fig. (2) in order to discharge air into the atmosphere until the pressure inside the air tank goes down to 0.25 MPa (0.2 MPa) from an air tank filled with the compressed air at a certain pressure level (0.5 MPa) which does not go below 0.6 MPa. At this time, measure the discharging time and the residual pressure inside the air tank which had been left until it turned to be the normal values to determine the effective area ***S***, using the following formula. The volume of an air tank should be selected within the specified range by corresponding to the effective area of an equipment for test. In the case of JIS B 8373, 8374, 8375, 8379, 8381, the pressure values are in parentheses and the coefficient of the formula is 12.9.

$$S = 12.1\,\frac{V}{t}\log_{10}\left(\frac{P_s + 0.1}{P + 0.1}\right)\sqrt{\frac{293}{T}} \quad \cdots\cdots (6)$$

S : Effective area [mm^2]
V : Air tank capacity [dm^3]
t : Discharging time [s]
P_s : Pressure inside air tank before discharging [MPa]
P : Residual pressure inside air tank after discharging [MPa]
T : Temperature inside air tank before discharging [K]

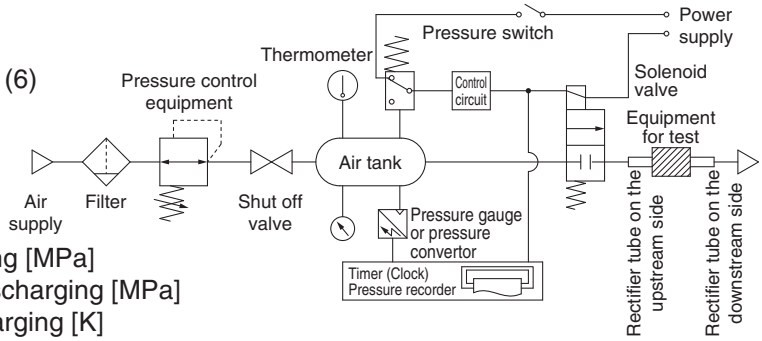

Fig. (2) Test circuit based on JIS B 8390

2.3 Flow coefficient *Cv* factor

The United States Standard ANSI/(NFPA)T3.21.3: 1990: Pneumatic fluid power—Flow rating test procedure and reporting method-For fixed orifice components

Defines the flow coefficient, ***Cv*** factor by the following formula which is based on the test conducted by the test circuit analogous to ISO 6358.

$$Cv = \frac{Q}{114.5\sqrt{\frac{\Delta P\,(P_2 + P_a)}{T_1}}} \quad \cdots\cdots(7)$$

ΔP : Pressure drop between the static pressure tapping ports [bar]
P_1 : Pressure of the upstream tapping port [bar gauge]
P_2 : Pressure of the downstream tapping port [bar gauge]: $P_2 = P_1 - \Delta P$
Q : Flow rate [dm^3/s standard condition]
P_a : Atmospheric pressure [bar absolute]
T_1 : Upstream absolute temperature [K]

Test conditions are $P_1 + P_a = 6.5 \pm 0.2$ bar absolute, $T_1 = 297 \pm 5$ K, 0.07 bar $\leq \Delta P \leq$ 0.14 bar.

This is the same concept as effective area ***A*** which ISO 6358 stipulates as being applicable only when the pressure drop is smaller than the upstream pressure and the compression of air does not become a problem.

3. Process fluid control equipment

(1) Conformed standard

IEC60534-2-3: 1997: Industrial-process control valves. Part 2: Flow capacity, Section Three-Test procedures
JIS B 2005: 1995: How to test flow coefficient of a valve
Equipment standards: JIS B 8471: Solenoid valve for water
JIS B 8472: Solenoid valve for steam
JIS B 8473: Solenoid valve for fuel oil

(2) Definition of flow-rate characteristics

Av factor: Value of the clean water flow rate represented by m^3/s which runs through a valve (equipment for test) when the pressure differential is 1 Pa. It is calculated using the following formula.

$$Av = Q\sqrt{\frac{\square}{\Delta P}} \quad \cdots\cdots(8)$$

Av : Flow coefficient [m^2]
Q : Flow rate [m^3/s]
ΔP : Pressure differential [Pa]
$\square$: Fluid density [kg/m^3]

(3) Formula for flow rate

Described by the practical units. Also, the flow-rate characteristics are shown in Graph (2).

In the case of liquid:

$$Q = 1.9 \times 10^6\, Av\sqrt{\frac{\Delta P}{G}} \quad \cdots\cdots(9)$$

Q : Flow rate [L/min]
Av : Flow coefficient [m^2]
ΔP : Pressure differential [MPa]
G : Specific gravity [water = 1]

In the case of saturated steam:

$$Q = 8.3 \times 10^6\, Av\sqrt{\Delta P\,(P_2 + 0.1)} \quad \cdots\cdots(10)$$

Q : Flow rate [kg/h]
Av : Flow coefficient [m^2]
ΔP : Pressure differential [MPa]
P_1 : Upstream pressure [MPa]: $\Delta P = P_1 - P_2$
P_2 : Downstream pressure [MPa]

Conversion of flow coefficient:

$Av = 28 \times 10^{-6}\ Kv = 24 \times 10^{-6}\ Cv$ ·····(11)

Here,

Kv factor : Value of the clean water flow rate represented by m^3/h which runs through a valve at 5 to 40°C, when the pressure differential is 1 bar.

Cv factor (Reference values): Value of the clean water flow rate represented by US gal/min which runs through a valve at 60°F, when the pressure differential is 1 lbf/in^2 (psi).

Value is different from ***Kv*** and ***Cv*** factors for pneumatic purpose due to different test method.

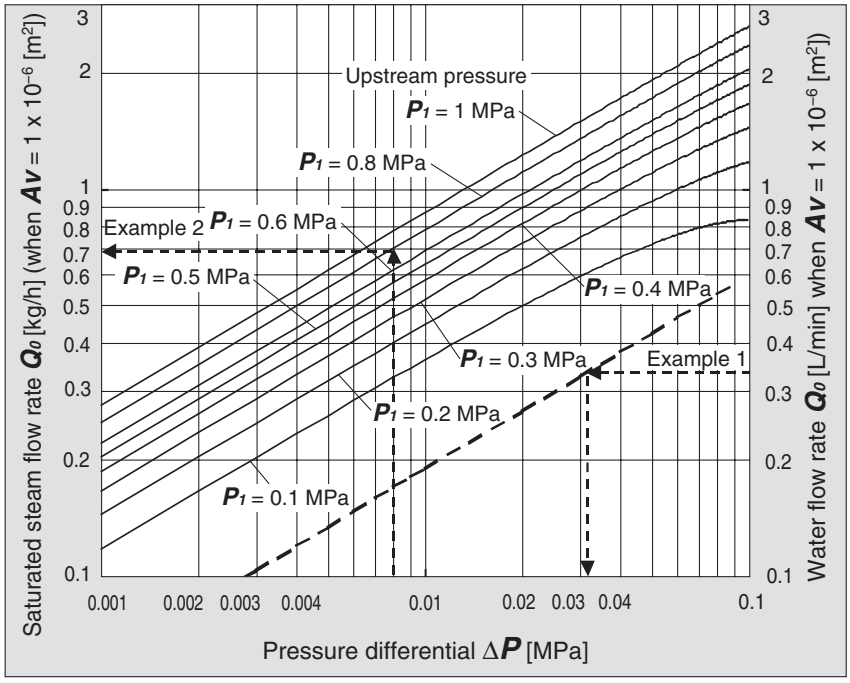

Graph (2) Flow-rate characteristics

Example 1)

Obtain the pressure differential when water 15 [L/min] runs through a solenoid valve with an $Av = 45 \times 10^{-6}$ [m^2].
Since Q_0 = 15/45 = 0.33 [L/min], according to Graph (2), if reading ΔP when Q_0 is 0.33, it will be 0.031 [MPa].

Example 2)

Obtain the saturated steam flow rate when P_1 = 0.8 [MPa], ΔP = 0.008 [MPa] with a solenoid valve with an $Av = 1.5 \times 10^{-6}$ [m^2].
According to Graph (2), if reading Q_0 when P_1 is 0.8 and ΔP is 0.008, it is 0.7 [kg/h]. Therefore, the flow rate Q = 0.7 x 1.5 = 1.05 [kg/h].

(4) Test method

Attach a test equipment with the test circuit shown in Fig. (3). Next, pour water at 5 to 40°C, then measure the flow rate with a pressure differential of 0.075 MPa. However, the pressure differential needs to be set with a large enough difference so that the Reynolds number does not go below a range of 4×10^4.
By substituting the measurement results for formula (8) to figure out ***Av***.

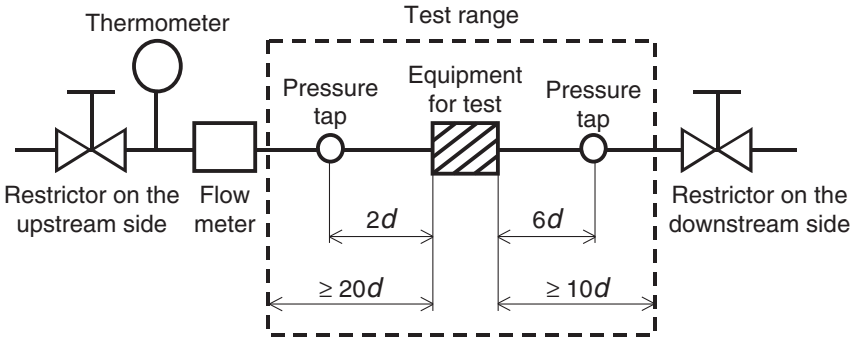

Fig. (3) Test circuit based on IEC60534-2-3, JIS B 2005

Flow-rate Characteristics

Note) Use this graph as a guide. In the case of obtaining an accurate flow rate, refer to pages 34 through to 38.

For Air (Orifice diameter: ø10 mm, ø15 mm, ø20 mm, ø25 mm)

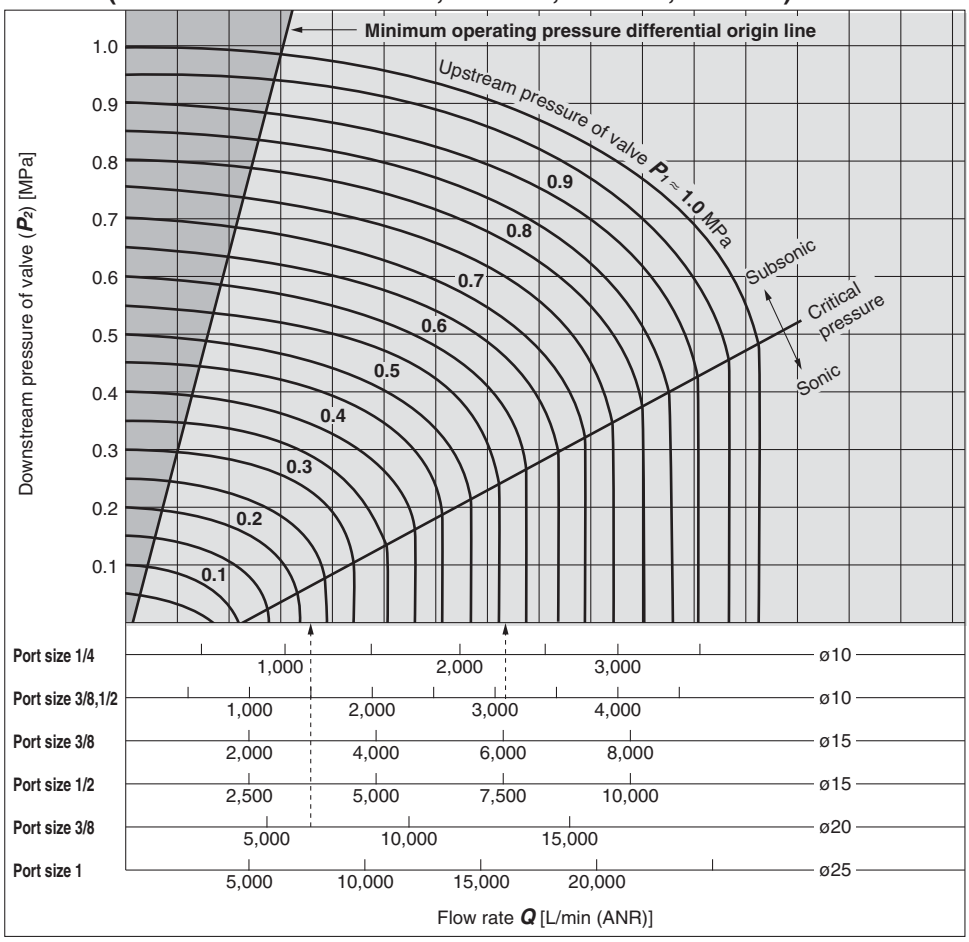

How to read the graph

The sonic range pressure to generate a flow rate of 6000 L/min (ANR) is $P_1 \approx 0.57$ MPa for a ø15 orifice (VXD240□□/Port size: 3/8) and $P_1 \approx 0.22$ MPa for a ø20 orifice (VXD250□□/Port size: 3/4).

⚠ Warning

In the area located left to the minimum operating pressure differential origin line in the flow-rate characteristics table, the minimum operating pressure is not generated. Do not use the product in this area as this may cause operation failure (valve opening failure, valve closing failure) or damage of the valve. Select valves with suitable size.

For Water

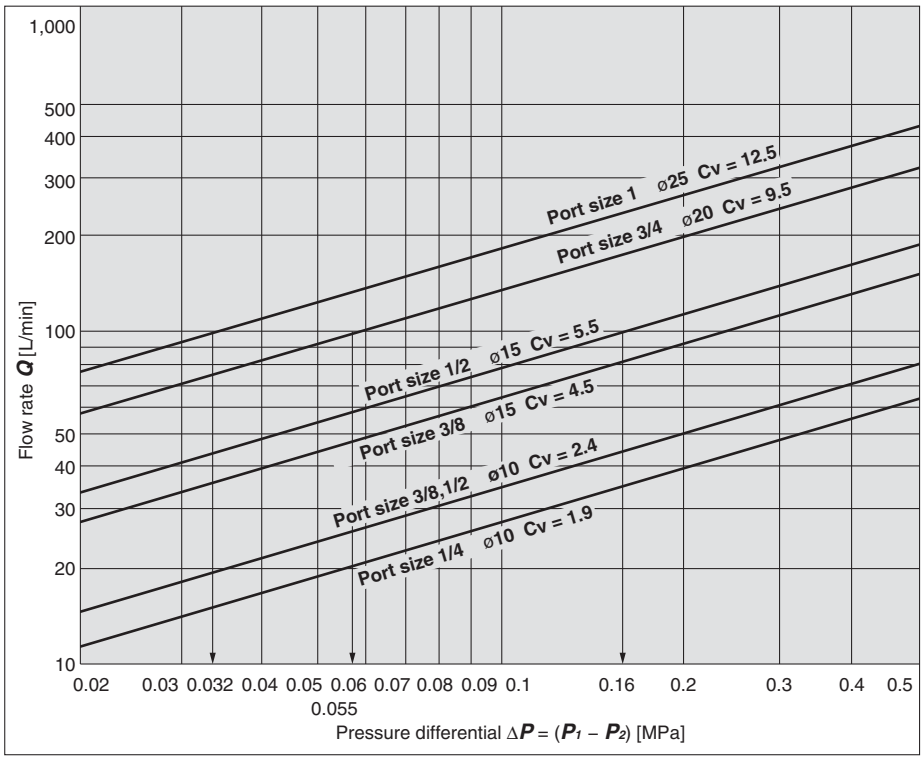

How to read the graph

The pressure differential when water with flow rate of 100 L/min is applied is as follows.
For a ø15 orifice (VXD214$^{2}_{0}$-04),
$\Delta P \approx 0.16$ MPa,
for a ø20 orifice (VXD250),
$\Delta P \approx 0.055$ MPa,
for a ø25 orifice (VXD260),
$\Delta P \approx 0.032$ MPa

Specific Product Precautions 1

Be sure to read before handling.
Refer to back cover for Safety Instructions, "Handling Precautions for SMC Products" (M-E03-3) and the Operation Manual for 2 Port Solenoid Valves for Fluid Control Precautions. Please download it via our website, http://www.smcworld.com

Design

⚠ Design

1. Cannot be used as an emergency shutoff valve etc.
The valves presented in this catalogue are not designed for safety applications such as an emergency shutoff valve. If the valves are used in this type of system, other reliable safety assurance measures should also be adopted.

2. Extended periods of continuous energization
The solenoid coil will generate heat when continuously energized. Avoid using in a tightly shut container. Install it in a well-ventilated area. Furthermore, do not touch it while it is being energized or right after it is energized.

3. Liquid rings
In cases with a flowing liquid, provide a bypass valve in the system to prevent the liquid from entering the liquid seal circuit.

4. Actuator drive
When an actuator, such as a cylinder, is to be driven using a valve, take appropriate measures to prevent potential danger caused by actuator operation.

5. Pressure (including vacuum) holding
It is not usable for an application such as holding the pressure (including vacuum) inside of a pressure vessel because air leakage is entailed in a valve.

6. When the conduit type is used as equivalent to an IP65 enclosure, install a wiring conduit etc.

7. When an impact, such as water hammer etc., caused by the rapid pressure fluctuation is applied, the solenoid valve may be damaged. Give an attention to it.

Selection

⚠ Warning

1. Minimum operating pressure differential

Be aware that even if the pressure difference is above the minimum operating pressure differential when the valve is closed, the pressure difference may fall below the minimum operating pressure differential when the valve opens, depending on the capacity of the supply source (pumps, compressors, etc.,) or the type of pipe restrictions (the piping is bent continuously due to elbow or tee, or narrow tube nozzle is installed in the end). If the product is used below the minimum operating pressure, the operation becomes unstable, which might cause valve opening or closing failure, or oscillation, leading to failure due to insufficient pressure differential. Select an appropriate valve size with reference to the flow-rate characteristics and flow-rate characteristics table (on pages 34 through to 40).

Selection

⚠ Warning

2. Fluid

1) Type of fluid
Select an appropriate valve with reference to the table below for the general fluid. Before using a fluid, check whether it is compatible with the materials of each model by referring to the fluids listed in this catalogue. Use a fluid with a kinematic viscosity of 50 mm^2/s or less.
If there is something you do not know, please contact SMC.

Applicable fluid

For Air	Air
For Water	Air/Water
For Oil	Air/Water/Oil
For Heated water	Air(up to 99°C)/Water/Heated water
For High temperature oil	Air(up to 99°C)/Water/High temperature oil

2) Flammable oil, Gas
Check the specifications for leakage in the interior and/or exterior area.

3) Corrosive gas
Cannot be used since it will lead to cracks by stress corrosion or result in other incidents.

4) Depending on water quality, a brass body can cause corrosion and internal leakage may occur. If such abnormalities occur, exchange the product for a stainless steel body.

5) Use an oil-free specification when any oily particle must not enter the passage.

6) Applicable fluid on the list may not be used depending on the operating condition. Give adequate confirmation, and then determine a model, just because the compatibility list shows the general case.

3. Fluid quality

<Air>

1) Use clean air.
Do not use compressed air that contains chemicals, synthetic oils including organic solvents, salt or corrosive gases, etc., as it can cause damage or malfunction.

2) Install an air filter.
Install an air filter close to the valve on the upstream side. A filtration degree of 5 μm or less should be selected.

3) Install an aftercooler or air dryer, etc.
Compressed air that contains excessive drainage may cause malfunction of valves and other pneumatic equipment. To prevent this, install an aftercooler or air dryer, etc.

4) If excessive carbon powder is generated, eliminate it by installing a mist separator on the upstream side of valves.
If excessive carbon powder is generated by the compressor, it may adhere to the inside of the valves and cause a malfunction.

Specific Product Precautions 2

Be sure to read before handling.
Refer to back cover for Safety Instructions, "Handling Precautions for SMC Products" (M-E03-3) and the Operation Manual for 2 Port Solenoid Valves for Fluid Control Precautions. Please download it via our website, http://www.smcworld.com

Selection

⚠ Warning

<Water>

The use of a fluid that contains foreign objects can cause problems such as malfunction and seal failure by promoting wear of the valve seat and armature, and by sticking to the sliding parts of the armature etc. Install a suitable filter (strainer) immediately upstream from the valve. As a general rule, use 80 to 100 mesh.
The supply water includes materials that create a hard sediment or sludge such as calcium and magnesium. Sediment and sludge can cause the valve to not operate properly. Therefore, install a water softening device, which removes these materials, and a filter (strainer) directly in front of the valve.

<Oil>

Generally, FKM is used as seal material, as it is resistant to oil. The resistance of the seal material may deteriorate depending on the type of oil, manufacturer or additives. Check the resistance before using.

4. Ambient environment

Use within the operable ambient temperature range. Check the compatibility between the product's composition materials and the ambient atmosphere. Be certain that the fluid used does not touch the external surface of the product.

5. Countermeasures against static electricity

Take measures to prevent static electricity since some fluids can cause static electricity.

⚠ Caution

1. Leakage voltage

Particularly when using a resistor in parallel with a switching element and using a C-R element (surge voltage suppressor) to protect the switching element, take note that leakage current will flow through the resistor, C-R element, etc., creating a possible danger that the valve may not turn off.

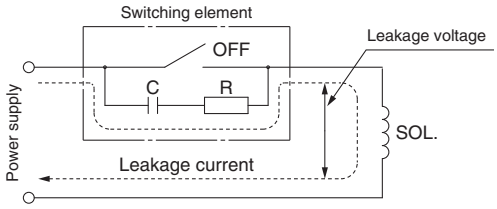

AC/Class B built-in full-wave rectifier coil: 10% or less of rated voltage
DC coil: 2% or less of rated voltage

2. Selecting model

Material depends on fluid. Select optimal models for the fluid.

3. When the fluid is oil.

The kinematic viscosity must not exceed 50 mm^2/s.

Mounting

⚠ Warning

1. If air leakage increases or equipment does not operate properly, stop operation.

After mounting is completed, confirm that it has been done correctly by performing a suitable function test.

2. Do not apply external force to the coil section.

When tightening is performed, apply a wrench or other tool to the outside of the piping connection parts.

3. Mount a valve with its coil position upward, not downward.

When mounting a valve with its coil positioned downward, foreign objects in the fluid will adhere to the iron core leading to a malfunction. Especially for strict leakage control, such as with vacuum applications and non-leak specifications, the coil must be positioned upward.

4. Do not warm the coil assembly with a heat insulator etc.

Use tape, heaters, etc., for freeze prevention on the piping and body only. They can cause the coil to burn out.

5. Secure with brackets, except in the case of steel piping and copper fittings.

6. Avoid sources of vibration, or adjust the arm from the body to the minimum length so that resonance will not occur.

7. Painting and coating

Warnings or specifications printed or labelled on the product should not be erased, removed or covered up.

Piping

⚠ Warning

1. During use, deterioration of the tube or damage to the fittings could cause tubes to come loose from their fittings and thrash about.

To prevent uncontrolled tube movement, install protective covers or fasten tubes securely in place.

2. For piping the tube, fix the product securely using the mounting holes so that the product is not in the air.

⚠ Caution

1. Preparation before piping

Before piping is connected, it should be thoroughly blown out with air (flushing) or washed to remove chips, cutting oil and other debris from inside the pipe.
Install piping so that it does not apply pulling, pressing, bending or other forces on the valve body.

2. Avoid connecting ground lines to piping, as this may cause electric corrosion of the system.

Specific Product Precautions 3

Be sure to read before handling.
Refer to back cover for Safety Instructions, "Handling Precautions for SMC Products" (M-E03-3) and the Operation Manual for 2 Port Solenoid Valves for Fluid Control Precautions. Please download it via our website, http://www.smcworld.com

Piping

⚠Caution

3. Always tighten threads with the proper tightening torque.
When attaching fittings to valves, tighten with the proper tightening torque shown below.

Tightening Torque for Piping

Connection thread	Proper tightening torque [N·m]
Rc1/8	7 to 9
Rc1/4	12 to 14
Rc3/8	22 to 24
Rc1/2	28 to 30
Rc3/4	
Rc1	36 to 38

4. When connecting piping to a product
Avoid mistakes regarding the supply port etc.

5. If the regulator and solenoid valve are connected directly, chattering may occur as both of them generate vibration. Do not connect them.

6. If the effective area of piping on the fluid supply side is restricted, the operation may become unstable due to differential pressure fluctuation during valve operation. The piping on the fluid supply side should match the port size of the valve.

Recommended Piping Conditions

1. When connecting tubes using one-touch fittings, provide some spare tube length shown in Fig. 1, recommended piping configuration.
Also, do not apply external force to the fittings when binding tubes with bands etc. (see Fig. 2.)

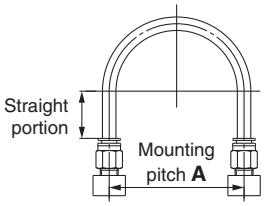

Fig. 1 Recommended piping configuration

Unit: mm

Tube size	Mounting pitch A			Straight portion length
	Nylon tube	Soft nylon tube	Polyurethane tube	
ø1/8"	44 or more	35 or more	25 or more	16 or more
ø6	84 or more	66 or more	39 or more	30 or more
ø1/4"	89 or more	70 or more	57 or more	32 or more
ø8	112 or more	88 or more	52 or more	40 or more
ø10	140 or more	110 or more	69 or more	50 or more
ø12	168 or more	132 or more	88 or more	60 or more

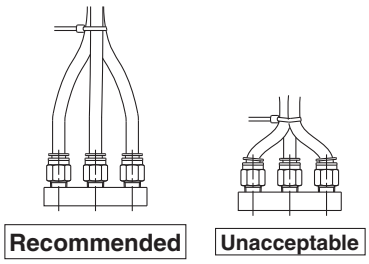

Fig. 2 Binding tubes with bands

Wiring

⚠Caution

1. As a rule, use electrical wire with a cross sectional area of 0.5 to 1.25 mm² for wiring.
Furthermore, do not allow excessive force to be applied to the lines.

2. Use electrical circuits which do not generate chattering in their contacts.

3. Use voltage which is within ±10% of the rated voltage. In cases with a DC power supply where importance is placed on responsiveness, stay within ±5% of the rated value. The voltage drop is the value in the lead wire section connecting the coil.

4. When a surge from the solenoid affects the electrical circuitry, install a surge voltage suppressor, etc., in parallel with the solenoid. Or, adopt an option that comes with the surge voltage protection circuit. (However, a surge voltage occurs even if the surge voltage protection circuit is used. For details, please consult with SMC.)

Operating Environment

⚠Warning

1. Do not use in an atmosphere having corrosive gases, chemicals, sea water, water, water vapor, or where there is direct contact with any of these.

2. Do not use in explosive atmospheres.

3. Do not use in locations subject to vibration or impact.

4. Do not use in locations where radiated heat will be received from nearby heat sources.

5. Employ suitable protective measures in locations where there is contact with water droplets, oil or welding spatter, etc.

Specific Product Precautions 4

Be sure to read before handling.
Refer to back cover for Safety Instructions, "Handling Precautions for SMC Products" (M-E03-3) and the Operation Manual for 2 Port Solenoid Valves for Fluid Control Precautions. Please download it via our website, http://www.smcworld.com

Maintenance

⚠ Warning

1. Removing the product
The valve will reach a high temperature when used with high temperature fluids. Confirm that the valve temperature has dropped sufficiently before performing work. If touched inadvertently, there is a danger of being burned.
1) Shut off the fluid supply and release the fluid pressure in the system.
2) Shut off the power supply.
3) Remove the product.

2. Low frequency operation
Switch valves at least once every 30 days to prevent malfunction. Also, in order to use it under the optimum state, conduct a regular inspection once a half year.

⚠ Caution

1. Filters and strainers
1) Be careful regarding clogging of filters and strainers.
2) Replace filter elements after one year of use, or earlier if the pressure drop reaches 0.1 MPa.
3) Clean strainers when the pressure drop reaches 0.1 MPa.

2. Lubrication
When using after lubricating, never forget to lubricate continuously.

3. Storage
In case of long term storage after use, thoroughly remove all moisture to prevent rust and deterioration of rubber materials, etc.

4. Exhaust the drainage from an air filter periodically.

Operating Precautions

⚠ Warning

1. If there is a possibility of reverse pressure being applied to the valve, take countermeasures such as mounting a check valve on the downstream side of the valve.

2. When problems are caused by a water hammer, install water hammer relief equipment (accumulator, etc.), or use an SMC water hammer relief valve (Series VXR). For details, please consult with SMC.

3. When the pilot type 2 port solenoid valve is closed, and pressure is applied suddenly due to the starting of fluid supply source such as pump and compressor, the valve may open momentarily and fluid may leak.

4. If the product is used in the conditions in which rapid decrease in the inlet pressure of the valve and rapid increase in the outlet pressure of the valve are repeated, excessive stress will be applied to the diaphragm, which causes the diaphragm to be damaged and dropped, leading to the operation failure of the valve. Check the operating conditions before use.

Electrical Connections

⚠ Caution

■ Grommet

Class B coil: AWG20 Outside insulator diameter of 2.5 mm

Class H coil: AWG18 Outside insulator diameter of 2.1 mm

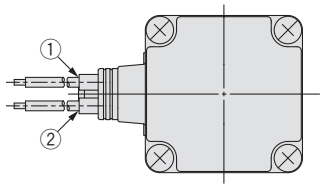

Rated voltage	Lead wire colour	
	①	②
DC	Black	Red
100 VAC	Blue	Blue
200 VAC	Red	Red
Other AC	Grey	Grey

∗ There is no polarity.

■ DIN terminal

Since internal connections are shown below for the DIN terminal, make connections to the power supply accordingly.

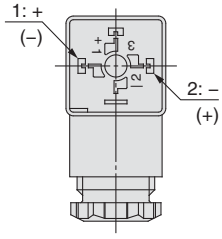

Terminal no.	1	2
DIN terminal	+ (–)	– (+)

∗ There is no polarity.
• Use a heavy-duty cord with an outside cable diameter of ø6 to 12 mm.
• Use the tightening torques below for each section.

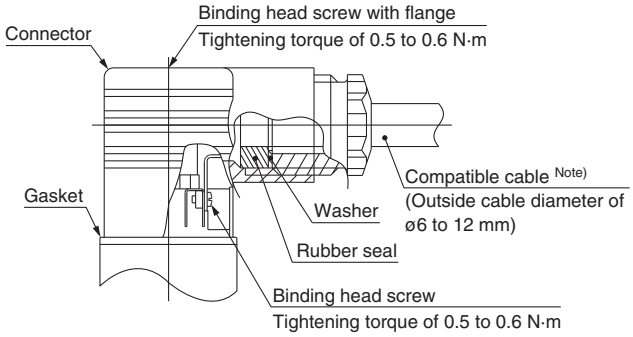

Note) For an outside cable diameter of ø9 to 12 mm, remove the internal parts of the rubber seal before using.

Specific Product Precautions 5

Be sure to read before handling.
Refer to back cover for Safety Instructions, "Handling Precautions for SMC Products" (M-E03-3) and the Operation Manual for 2 Port Solenoid Valves for Fluid Control Precautions. Please download it via our website, http://www.smcworld.com

Electrical Connections

⚠ Caution

■ Conduit terminal

In the case of the conduit terminal, make connections according to the marks shown below.

- Use the tightening torques below for each section.
- Properly seal the terminal connection (G1/2) with the special wiring conduit etc.

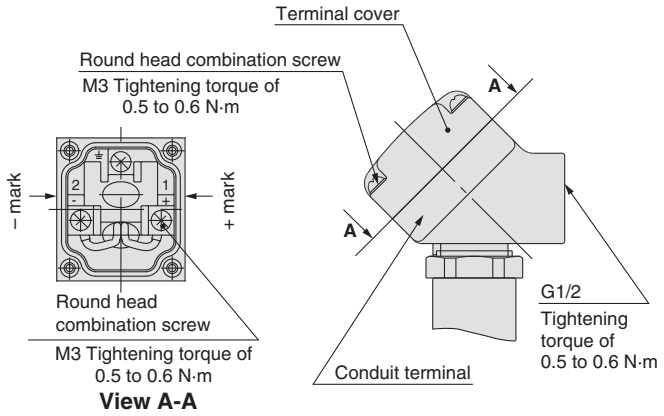

(Internal connection diagram)

■ Conduit

When used as an IP65 equivalent, use seal to install the wiring conduit. Also, use the tightening torque below for the conduit.

Class B coil: AWG20 Outside insulator diameter of 2.5 mm
Class H coil: AWG18 Outside insulator diameter of 2.1 mm

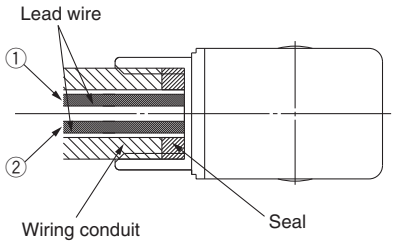

(Connection G1/2 Tightening torque of 0.5 to 0.6 N·m)

Rated voltage	Lead wire colour	
	①	②
DC	Black	Red
100 VAC	Blue	Blue
200 VAC	Red	Red
Other AC	Grey	Grey

∗ There is no polarity.
(There is no polarity, except for the power-saving type.)

Description	Part no.
Seal	VCW20-15-6

Note) Please order separately.

Electrical Circuits

⚠ Caution

[DC circuit]

Grommet, Faston terminal

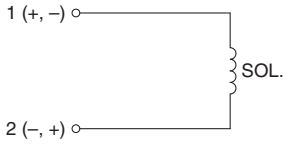

Without electrical option

Grommet, DIN terminal, Conduit terminal, Conduit

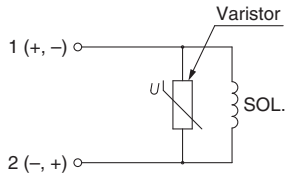

With surge voltage suppressor

DIN terminal, Conduit terminal

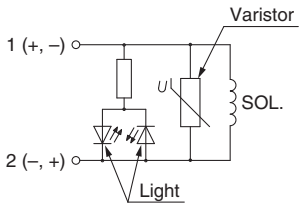

With light/surge voltage suppressor

[AC circuit]

∗ For AC, the standard product is equipped with surge voltage suppressor.

Grommet, DIN terminal, Conduit terminal, Conduit

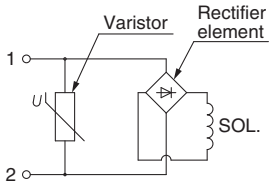

Without electrical option

DIN terminal, Conduit terminal

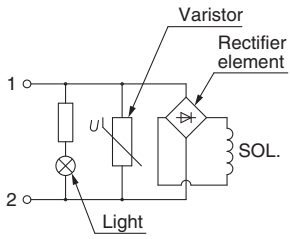

With light/surge voltage suppressor

One-touch Fitting

⚠ Caution

For information on handling one-touch fittings (KQ2 series) and appropriate tubing, refer to SMC website, http://www.smc.eu

⚠ Safety Instructions

These safety instructions are intended to prevent hazardous situations and/or equipment damage. These instructions indicate the level of potential hazard with the labels of **"Caution," "Warning"** or **"Danger."** They are all important notes for safety and must be followed in addition to International Standards (ISO/IEC)*1), and other safety regulations.

⚠ Caution: **Caution** indicates a hazard with a low level of risk which, if not avoided, could result in minor or moderate injury.

⚠ Warning: **Warning** indicates a hazard with a medium level of risk which, if not avoided, could result in death or serious injury.

⚠ Danger : **Danger** indicates a hazard with a high level of risk which, if not avoided, will result in death or serious injury.

*1) ISO 4414: Pneumatic fluid power – General rules relating to systems.
ISO 4413: Hydraulic fluid power – General rules relating to systems.
IEC 60204-1: Safety of machinery – Electrical equipment of machines. (Part 1: General requirements)
ISO 10218-1: Manipulating industrial robots - Safety.
etc.

⚠ Warning

1. **The compatibility of the product is the responsibility of the person who designs the equipment or decides its specifications.**
   Since the product specified here is used under various operating conditions, its compatibility with specific equipment must be decided by the person who designs the equipment or decides its specifications based on necessary analysis and test results. The expected performance and safety assurance of the equipment will be the responsibility of the person who has determined its compatibility with the product. This person should also continuously review all specifications of the product referring to its latest catalogue information, with a view to giving due consideration to any possibility of equipment failure when configuring the equipment.
2. **Only personnel with appropriate training should operate machinery and equipment.**
   The product specified here may become unsafe if handled incorrectly. The assembly, operation and maintenance of machines or equipment including our products must be performed by an operator who is appropriately trained and experienced.
3. **Do not service or attempt to remove product and machinery/equipment until safety is confirmed.**
   1. The inspection and maintenance of machinery/equipment should only be performed after measures to prevent falling or runaway of the driven objects have been confirmed.
   2. When the product is to be removed, confirm that the safety measures as mentioned above are implemented and the power from any appropriate source is cut, and read and understand the specific product precautions of all relevant products carefully.
   3. Before machinery/equipment is restarted, take measures to prevent unexpected operation and malfunction.
4. **Contact SMC beforehand and take special consideration of safety measures if the product is to be used in any of the following conditions.**
   1. Conditions and environments outside of the given specifications, or use outdoors or in a place exposed to direct sunlight.
   2. Installation on equipment in conjunction with atomic energy, railways, air navigation, space, shipping, vehicles, military, medical treatment, combustion and recreation, or equipment in contact with food and beverages, emergency stop circuits, clutch and brake circuits in press applications, safety equipment or other applications unsuitable for the standard specifications described in the product catalogue.
   3. An application which could have negative effects on people, property, or animals requiring special safety analysis.
   4. Use in an interlock circuit, which requires the provision of double interlock for possible failure by using a mechanical protective function, and periodical checks to confirm proper operation.

⚠ Caution

1. **The product is provided for use in manufacturing industries.**
   The product herein described is basically provided for peaceful use in manufacturing industries.
   If considering using the product in other industries, consult SMC beforehand and exchange specifications or a contract if necessary.
   If anything is unclear, contact your nearest sales branch.

Limited warranty and Disclaimer/ Compliance Requirements

The product used is subject to the following "Limited warranty and Disclaimer" and "Compliance Requirements".
Read and accept them before using the product.

Limited warranty and Disclaimer

1. The warranty period of the product is 1 year in service or 1.5 years after the product is delivered, wichever is first.*2)
   Also, the product may have specified durability, running distance or replacement parts. Please consult your nearest sales branch.
2. For any failure or damage reported within the warranty period which is clearly our responsibility, a replacement product or necessary parts will be provided.
   This limited warranty applies only to our product independently, and not to any other damage incurred due to the failure of the product.
3. Prior to using SMC products, please read and understand the warranty terms and disclaimers noted in the specified catalogue for the particular products.

*2) **Vacuum pads are excluded from this 1 year warranty.**
A vacuum pad is a consumable part, so it is warranted for a year after it is delivered.
Also, even within the warranty period, the wear of a product due to the use of the vacuum pad or failure due to the deterioration of rubber material are not covered by the limited warranty.

Compliance Requirements

1. The use of SMC products with production equipment for the manufacture of weapons of mass destruction (WMD) or any other weapon is strictly prohibited.
2. The exports of SMC products or technology from one country to another are governed by the relevant security laws and regulations of the countries involved in the transaction. Prior to the shipment of a SMC product to another country, assure that all local rules governing that export are known and followed.

⚠ Safety Instructions Be sure to read "Handling Precautions for SMC Products" (M-E03-3) before using.

SMC Corporation (Europe)

Austria	☎ +43 (0)2262622800	www.smc.at	office@smc.at
Belgium	☎ +32 (0)33551464	www.smcpneumatics.be	info@smcpneumatics.be
Bulgaria	☎ +359 (0)2807670	www.smc.bg	office@smc.bg
Croatia	☎ +385 (0)13707288	www.smc.hr	office@smc.hr
Czech Republic	☎ +420 541424611	www.smc.cz	office@smc.cz
Denmark	☎ +45 70252900	www.smcdk.com	smc@smcdk.com
Estonia	☎ +372 6510370	www.smcpneumatics.ee	smc@smcpneumatics.ee
Finland	☎ +358 207513513	www.smc.fi	smcfi@smc.fi
France	☎ +33 (0)164761000	www.smc-france.fr	promotion@smc-france.fr
Germany	☎ +49 (0)61034020	www.smc.de	info@smc.de
Greece	☎ +30 210 2717265	www.smchellas.gr	sales@smchellas.gr
Hungary	☎ +36 23511390	www.smc.hu	office@smc.hu
Ireland	☎ +353 (0)14039000	www.smcpneumatics.ie	sales@smcpneumatics.ie
Italy	☎ +39 0292711	www.smcitalia.it	mailbox@smcitalia.it
Latvia	☎ +371 67817700	www.smclv.lv	info@smclv.lv
Lithuania	☎ +370 5 2308118	www.smclt.lt	info@smclt.lt
Netherlands	☎ +31 (0)205318888	www.smcpneumatics.nl	info@smcpneumatics.nl
Norway	☎ +47 67129020	www.smc-norge.no	post@smc-norge.no
Poland	☎ +48 (0)222119616	www.smc.pl	office@smc.pl
Portugal	☎ +351 226166570	www.smc.eu	postpt@smc.smces.es
Romania	☎ +40 213205111	www.smcromania.ro	smcromania@smcromania.ro
Russia	☎ +7 8127185445	www.smc-pneumatik.ru	info@smc-pneumatik.ru
Slovakia	☎ +421 (0)413213212	www.smc.sk	office@smc.sk
Slovenia	☎ +386 (0)73885412	www.smc.si	office@smc.si
Spain	☎ +34 902184100	www.smc.eu	post@smc.smces.es
Sweden	☎ +46 (0)86031200	www.smc.nu	post@smc.nu
Switzerland	☎ +41 (0)523963131	www.smc.ch	info@smc.ch
Turkey	☎ +90 212 489 0 440	www.smcpnomatik.com.tr	info@smcpnomatik.com.tr
UK	☎ +44 (0)845 121 5122	www.smcpneumatics.co.uk	sales@smcpneumatics.co.uk

SMC CORPORATION Akihabara UDX 15F, 4-14-1, Sotokanda, Chiyoda-ku, Tokyo 101-0021, JAPAN Phone: 03-5207-8249 FAX: 03-5298-5362

1st printing QX printing QX 00 Printed in Spain

Specifications are subject to change without prior notice and any obligation on the part of the manufacturer.