THIS DRAWING IS UNPUBLISHED. RELEASED FOR PUBLICATION ,19 .
© COPYRIGHT 19 BY AMP INCORPORATED. ALL RIGHTS RESERVED.

LOC	DIST
DS	

REVISIONS

P	LTR	DESCRIPTION	DATE	DWN	APVD
	A	REVISED(RD2001-037)	04/APR/01	MS	CS
	B	REVISED(RD2002-013)	04/FEB/02	MS	CS
	B1	REVISED(ECR-18-001818)	18/FEB/06	SH	YJ

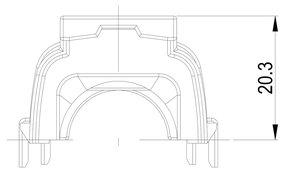

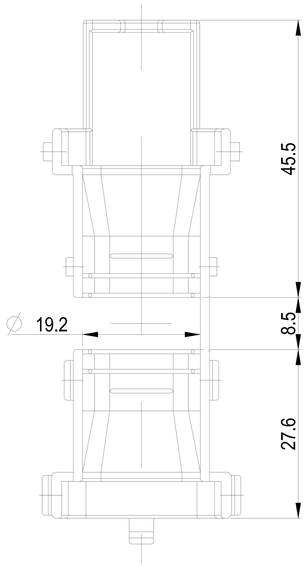

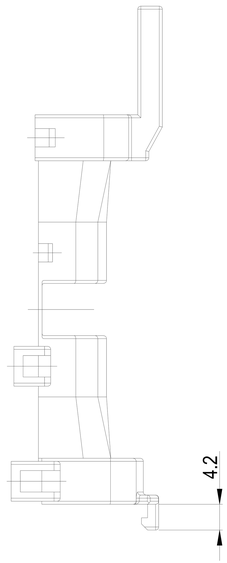

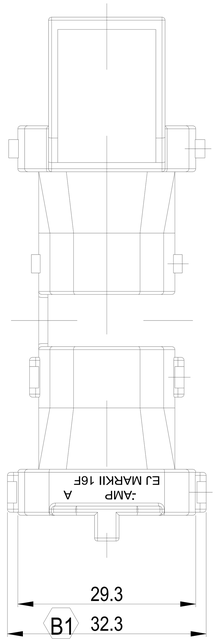

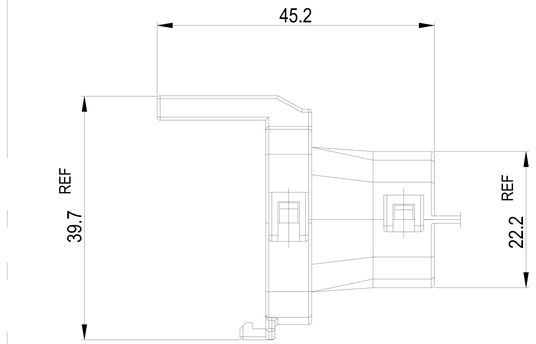

ASS'Y VIEW

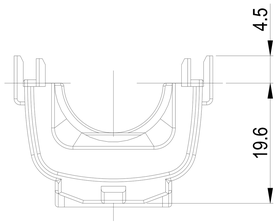

NOTE

1. WARP IS 0.5 MAX. AND FLASH IS 0.3 MAX.
2. APPLICABLE CORRUGATOR DIAMETER : ∅ 11.0

(A)

(A)			
1-936049-1	∅ : 11.0	P.B.T	BLACK
PART NUMBER	CORRUGATOR ∅	MATERIAL	COLOR

IT IS SUBJECT TO CHANGE AND THE CONT ROLLING ENGINEERING
ORGANIZATION SHOULD BE CONTACTED FOR THE LATEST REVISION.
ORGANIZATION SHOULD BE CONTACTED FOR THE LATEST REVISION.

DIMENSIONS: MM

3rd ANGLE PROJECTION

TOLERANCES UNLESS OTHERWISE SPECIFIED:

0 <XX<10	± 0.2
10<XX<30	± 0.25
30<XX	± 0.3
ANGLES	± 3°

MATERIAL: SEE TABLE (B)

FINISH

DWN MS HER
CHK BM JANG
APVD CS LEE
PRODUCT SPEC
APPLICATION SPEC
WEIGHT

TE Connectivity

NAME: COVER HSG FOR EJ 16P PLUG CONN'R

SIZE	CAGE CODE	DRAWING NO
A3	00779	C- 936049

SCALE	SHEET	REV
1/1	1 1 OF	B1

AMP 1470-19 REV 09MAY94