THIS DRAWING IS UNPUBLISHED. RELEASED FOR PUBLICATION - , - .
© COPYRIGHT - By - ALL RIGHTS RESERVED.

LOC	DIST
AD	00

REVISIONS

P	LTR	DESCRIPTION	DATE	DWN	APVD
	A3	REVISED PER ECO-13-005565	30MAR13	KH	JO

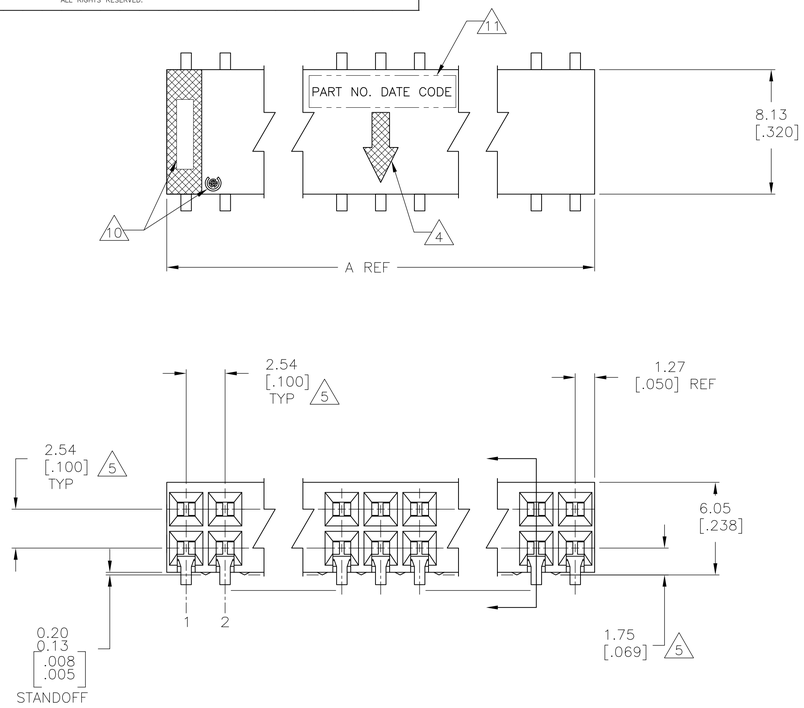

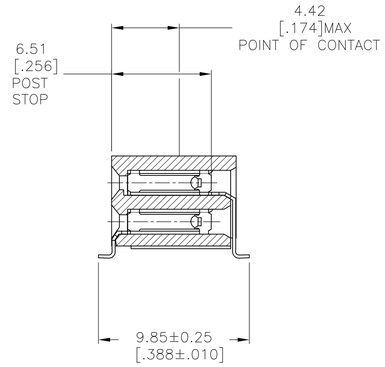

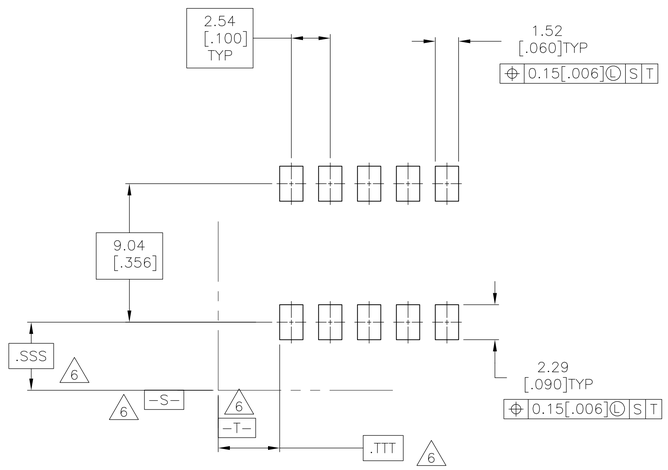

RECOMMENDED PC BOARD LAYOUT

1. HOUSING: GLASS FILLED POLYESTER, PCT, COLOR: BLACK
2. CONTACT: PHOSPHOR BRONZE
3. CONTACT FINISH: 0.00076(0.000030) THK DUPLEX PLATED GOLD ON CONTACT AREA, 3.81-7.62(.000150-.000300) MATTE TIN ON SOLDER LEADS ALL OVER 0.00127(.000050) MIN NICKEL.
4. MOLDED IN ARROW DESIGNATES MATING FACE OF CONNECTOR.
5. DIMENSIONS PERTAINS TO CAVITY CENTERLINES.
6. DATUMS AND BASIC DIMENSIONS ARE ESTABLISHED BY THE CUSTOMER.
8. NO PART NUMBER MARKING REQUIRED FOR THIS PART.
9. ROHS 2002/95/EC COMPLAINT
10. TE LOGO AND CSA LOGO ARE MOLDED INTO HOUSING, THIS LOCATION.
11. MARK PART NUMBER AND DATE CODE IN APPROXIMATE LOCATION SHOWN, EITHER END.

A	NO OF POSN	PART NUMBER
	165.10 [6.500]	130	6-5147722-4
	162.56 [6.400]	128	6-5147722-3
	160.02 [6.300]	126	6-5147722-2
	157.48 [6.200]	124	6-5147722-1
	152.94 [6.100]	122	6-5147722-0
	152.40 [6.000]	120	5-5147722-9
	149.86 [5.900]	118	5-5147722-8
	147.32 [5.800]	116	5-5147722-7
	144.78 [5.700]	114	5-5147722-6
	147.32 [5.600]	112	5-5147722-5
	139.70 [5.500]	110	5-5147722-4
	137.16 [5.400]	108	5-5147722-3
	134.62 [5.300]	106	5-5147722-2
	132.08 [5.200]	104	5-5147722-1
	129.54 [5.100]	102	5-5147722-0
	127.00 [5.000]	100	4-5147722-9
	124.46 [4.900]	98	4-5147722-8
	121.92 [4.800]	96	4-5147722-7
	119.38 [4.700]	94	4-5147722-6
	116.84 [4.600]	92	4-5147722-5
	114.30 [4.500]	90	4-5147722-4
	111.76 [4.400]	88	4-5147722-3
	109.22 [4.300]	86	4-5147722-2
	106.68 [4.200]	84	4-5147722-1
	104.14 [4.100]	82	4-5147722-0
	101.60 [4.000]	80	3-5147722-9
	99.06 [3.900]	78	3-5147722-8
	96.52 [3.800]	76	3-5147722-7
	93.98 [3.700]	74	3-5147722-6
	91.44 [3.600]	72	3-5147722-5
	88.90 [3.500]	70	3-5147722-4
	88.90 [3.500]	70	3-5147722-4
	86.36 [3.400]	68	3-5147722-3
	83.82 [3.300]	66	3-5147722-2
	81.28 [3.200]	64	3-5147722-1
	78.74 [3.100]	62	3-5147722-0
	76.20 [3.000]	60	2-5147722-9
	73.66 [2.900]	58	2-5147722-8
	71.12 [2.800]	56	2-5147722-7
	68.58 [2.700]	54	2-5147722-6
	66.04 [2.600]	52	2-5147722-5
	63.50 [2.500]	50	2-5147722-4
	60.96 [2.400]	48	2-5147722-3
	58.42 [2.300]	46	2-5147722-2
	55.88 [2.200]	44	2-5147722-1
	53.34 [2.100]	42	2-5147722-0
	50.80 [2.000]	40	1-5147722-9
	48.26 [1.900]	38	1-5147722-8
	45.72 [1.800]	36	1-5147722-7
	43.18 [1.700]	34	1-5147722-6
	40.64 [1.600]	32	1-5147722-5
	38.10 [1.500]	30	1-5147722-4
	35.56 [1.400]	28	1-5147722-3
	33.02 [1.300]	26	1-5147722-2
	30.48 [1.200]	24	1-5147722-1
	27.94 [1.100]	22	1-5147722-0
	25.40 [1.000]	20	5147722-9
	22.86 [.900]	18	5147722-8
	20.32 [.800]	16	5147722-7
	17.78 [.700]	14	5147722-6
	15.24 [.600]	12	5147722-5
8	10.16 [.500]	10	5147722-4
8	10.16 [.400]	8	5147722-3
8	7.62 [.300]	6	5147722-2
8	5.08 [.200]	4	5147722-1
A	NO OF POSN	PART NUMBER

THIS DRAWING IS A CONTROLLED DOCUMENT.

DIMENSIONS: mm [INCHES]

TOLERANCES UNLESS OTHERWISE SPECIFIED:
0 PLC ± -
1 PLC ± -
2 PLC ± -
3 PLC ± .005
4 PLC ± -
ANGLES ± -

MATERIAL 1 2
FINISH 3

DWN RSV 09NOV04
CHK J. OLSON -
APVD J. OLSON -
PRODUCT SPEC —
APPLICATION SPEC —
WEIGHT —

TE Connectivity

NAME AMPMODU MODII RCPT ASSY, HORIZ, SURFACE MOUNT .100CL, 2ROW, CLSD-ENTRY, END TO END STACKED

SIZE	CAGE CODE	DRAWING NO	RESTRICTED TO
A1	00779	C-5147722	—

CUSTOMER DRAWING SCALE 5:1 SHEET 1 OF 1 REV A3

4805 (3/11)