POSITIONS/ CONTACTS	A		B		C	
	MM±0.20	[INCH±0.008]	MM±0.30	[INCH±0.012]	MM±0.20	[INCH±0.008]
02/04	1.00	0.039	2.40	0.094	N/A	N/A
03/06	2.00	0.079	3.40	0.134	1.00	0.039
04/08	3.00	0.118	4.40	0.173	2.00	0.079
05/10	4.00	0.157	5.40	0.213	3.00	0.118
06/12	5.00	0.197	6.40	0.252	4.00	0.157
07/14	6.00	0.236	7.40	0.291	5.00	0.197
08/16	7.00	0.276	8.40	0.331	6.00	0.236
09/18	8.00	0.315	9.40	0.370	7.00	0.276
10/20	9.00	0.354	10.40	0.409	8.00	0.315
11/22	10.00	0.394	11.40	0.449	9.00	0.354
12/24	11.00	0.433	12.40	0.488	10.00	0.394
13/26	12.00	0.472	13.40	0.528	11.00	0.433
14/28	13.00	0.512	14.40	0.567	12.00	0.472
15/30	14.00	0.551	15.40	0.606	13.00	0.512
16/32	15.00	0.591	16.40	0.646	14.00	0.551
17/34	16.00	0.630	17.40	0.685	15.00	0.591
18/36	17.00	0.669	18.40	0.724	16.00	0.630
19/38	18.00	0.709	19.40	0.764	17.00	0.669
20/40**	19.00	0.748	20.40	0.803	18.00	0.709
21/42	20.00	0.787	21.40	0.843	19.00	0.748
22/44	21.00	0.827	22.40	0.882	20.00	0.787
23/46	22.00	0.866	23.40	0.921	21.00	0.827
24/48	23.00	0.906	24.40	0.961	22.00	0.866
25/50	24.00	0.945	25.40	1.000	23.00	0.906
26/52	25.00	0.984	26.40	1.039	24.00	0.945
27/54	26.00	1.024	27.40	1.079	25.00	0.984
28/56	27.00	1.063	28.40	1.118	26.00	1.024
29/58	28.00	1.102	29.40	1.157	27.00	1.063
30/60	29.00	1.142	30.40	1.197	28.00	1.102
31/62	30.00	1.181	31.40	1.236	29.00	1.142
32/64	31.00	1.220	32.40	1.276	30.00	1.181
33/66	32.00	1.260	33.40	1.315	31.00	1.220
34/68	33.00	1.299	34.40	1.354	32.00	1.260
35/70	34.00	1.339	35.40	1.394	33.00	1.299
36/72	35.00	1.378	36.40	1.433	34.00	1.339
37/74	36.00	1.417	37.40	1.472	35.00	1.378
38/76	37.00	1.457	38.40	1.512	36.00	1.417
39/78	38.00	1.496	39.40	1.551	37.00	1.457
40/80	39.00	1.535	40.40	1.591	38.00	1.496
41/82	40.00	1.575	41.40	1.630	39.00	1.535
42/84	41.00	1.614	42.40	1.669	40.00	1.575
43/86	42.00	1.654	43.40	1.709	41.00	1.614
44/88	43.00	1.693	44.40	1.748	42.00	1.654
45/90	44.00	1.732	45.40	1.787	43.00	1.693
46/92	45.00	1.772	46.40	1.827	44.00	1.732
47/94	46.00	1.811	47.40	1.866	45.00	1.772
48/96	47.00	1.850	48.40	1.906	46.00	1.811
49/98	48.00	1.890	49.40	1.945	47.00	1.850
50/100	49.00	1.929	50.40	1.984	48.00	1.890

**NOTE: POSITION 20 NOT AVAILABLE.

REVISIONS				
REV.	ECO. NO	DESCRIPTION	DATE	BY
A	1910	INITIAL RELEASE	2/05/2009	JH

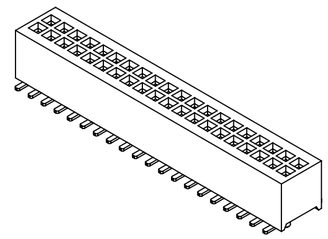

PART NUMBER CODING

SFM315-LP_E-D_ _-S_-BK

MOUNTING STYLES
M = SURFACE MOUNT W/O GUIDE POSTS.
P = SURFACE MOUNT W/ GUIDE POSTS.

NUMBER OF POSITIONS
(CONTACTS PER ROW, 2 THRU 50)

PLATING
P = GOLD FLASH OVERALL.
G = 10u" GOLD ON CONTACT SURFACE, GOLD FLASH ON TERMINATION.

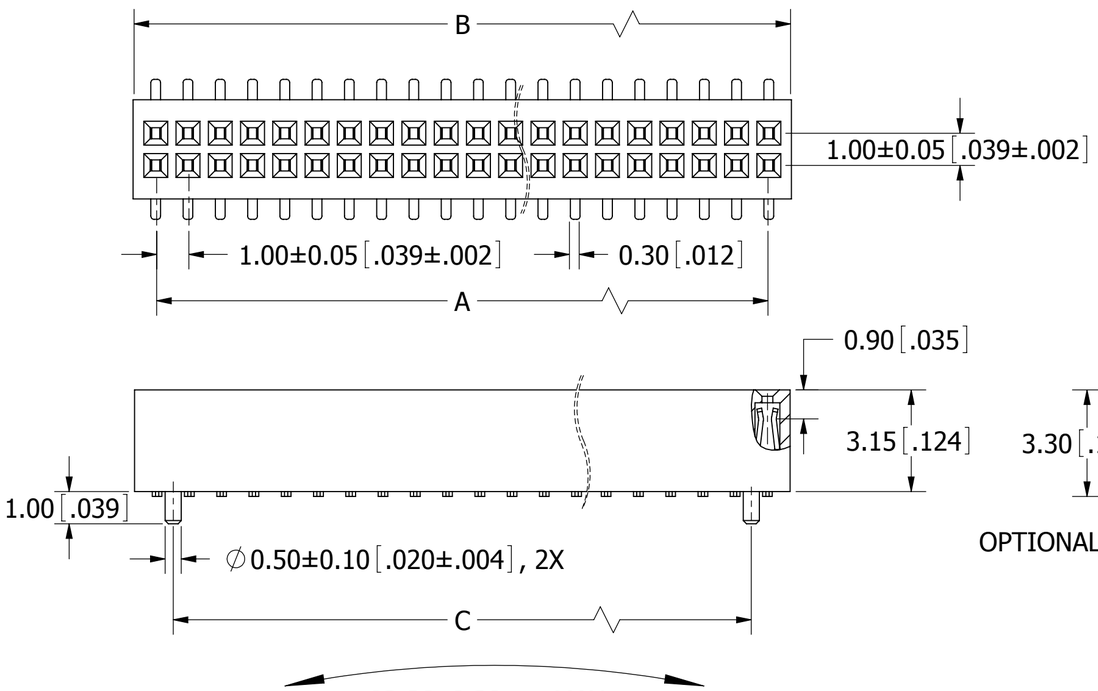

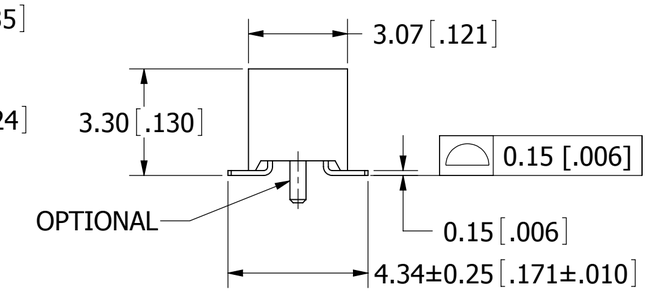

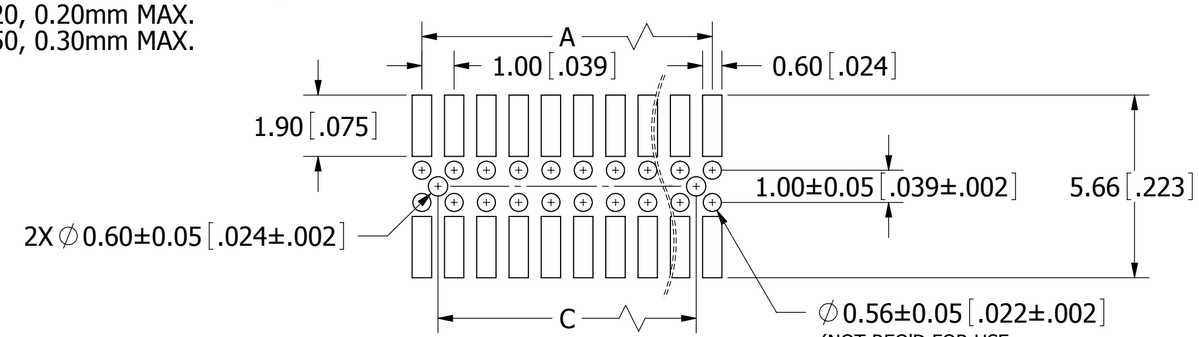

RECOMMENDED PCB LAYOUT

NOTES:
1. INSULATOR MATERIAL: L.C.P, UL 94V-0, BLACK COLOR.
2. CONTACT MATERIAL: PHOSPHOR BRONZE.
3. CONTACT PLATING: SEE PART NUMBER CODING.
4. CURRENT RATING: 1 AMP.
5. INSULATOR RESISTANCE: 5000 MEGA OHMS MIN.
6. CONTACT RESISTANCE: 20 MILLI OHMS MAX.
7. DIELECTRIC WITHSTANDING: 500V AC/MINUTE.
8. OPERATING TEMPERATURE: -40° C TO +125° C.
9. PROCESSING TEMP.: 260° C FOR 10 SECS MAX.
(INDICATED TEMPERATURE AND TIME IS FOR COMPONENT INSULATOR. HIGHER PROCESSING TEMPERATURES MAY BE USED, PROVIDED HEAT IS APPLIED FROM BACK SIDE OF PCB, AND INSULATOR DOES NOT EXCEED INDICATED TEMPERATURE AND TIME.)
10. FOR TOP/BOTTOM ENTRY.
11. CONSULT FACTORY FOR THE MATE IF BEING USED AS BOTTOM ENTRY.

RoHS COMPLIANT

UNLESS OTHERWISE SPECIFIED:
DIMENSIONS ARE IN MM[INCHES]
TOLERANCES:
ANGULAR: ± 5°
.X=± .30 [.012]
.XX=± .20 [.008]
.XXX=± .15 [.006]
SURFACE FINISH: 63 Ra
REMOVE ALL BURRS AND SHARP EDGES .010 MAX

INTERPRET DIMENSIONS AND GEOMETRIC TOLERANCING PER: ANSI Y14.5M-1994

	DATE	NAME
DRAWN	2/12/09	JH

THE INFORMATION HEREIN CONTAINS PROPIETARY INFORMATION OF SULLINS ELECTRONICS AND IS NOT TO BE REPRODUCED, USED OR DISCLOSED TO OTHERS FOR ANY PURPOSE EXCEPT AS SPECIFICALLY AUTHORIZED IN WRITING BY AN OFFICER OF SULLINS ELECTRONICS.

SULLINS CONNECTOR SOLUTIONS

DESCRIPTION: HEADER, FEMALE 1mm CC, 2 ROWS, SMT

PART NUMBER: **SFM315-LP_E-D_ _-S_-BK**

SIZE	DWG. NO.	REV
C	11204	A

SCALE: 10:1 | SHEET 1 OF 1

FILE NAME: Z:\COMPONENTS\Taiwan\11204, SFM315-LP_E-D_ _-S_-BK PRINT: 3/4/2009