THIS DRAWING IS UNPUBLISHED. RELEASED FOR PUBLICATION -.- .
© COPYRIGHT - BY TYCO ELECTRONICS CORPORATION. ALL RIGHTS RESERVED.

LOC	DIST
AD	00

REVISIONS

P	LTR	DESCRIPTION	DATE	DWN	APVD
	C	EC 0G3C 0397 04	17MAR05	BSV	KW

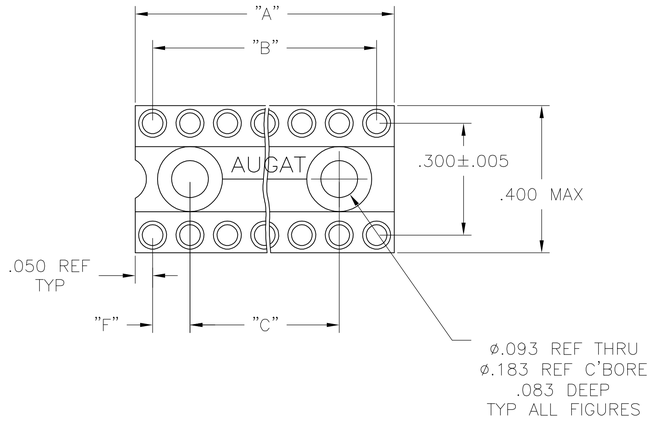

FIG. 1

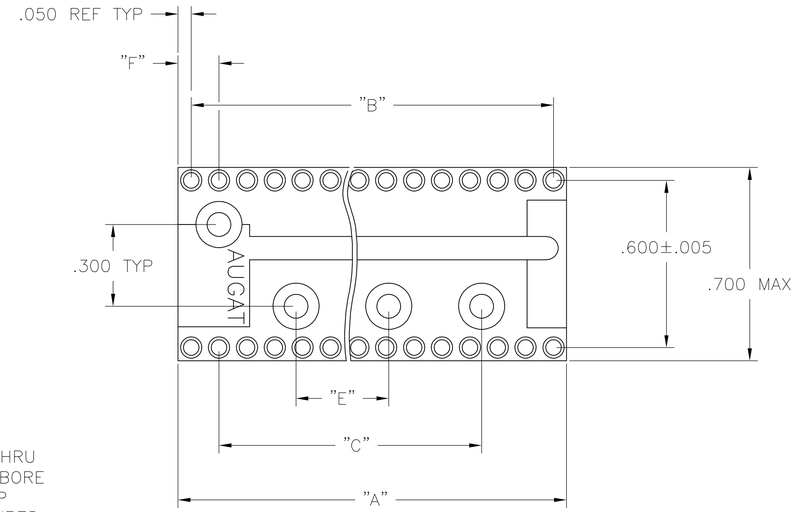

FIG. 2

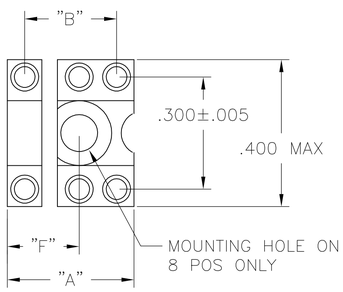

FIG. 3

6 POS MOUNTING HOLE OMITTED

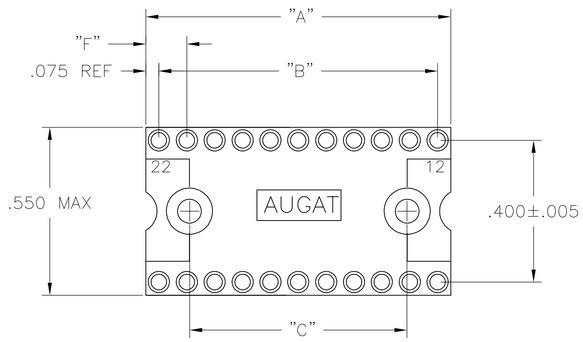

FIG. 4

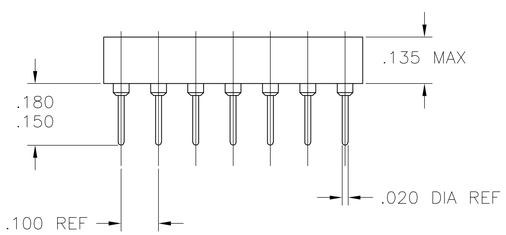

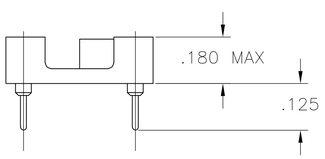

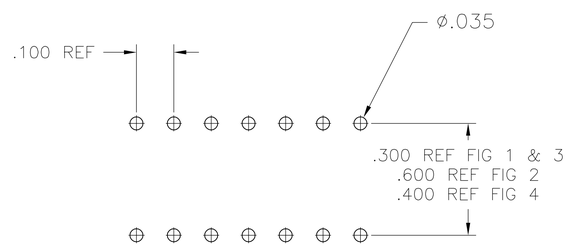

P.C.B. HOLE LAYOUT

TOLERANCE ±.003

1. INSULATOR MATERIAL – THERMOPLASTIC POLYESTER, PCT, BLACK, UL94 V–0.
2. STAMPED CONTACT BECU, PLATED WITH 80–200 µIN THK, TIN, (LEAD FREE) OVER 75–100 µIN THK COPPER.
3. SLEEVE – NICKEL, PLATED WITH 180–340 µIN THK, TIN, (LEAD FREE) OVER 75–100 µIN THK NICKEL.
4. STAMPED CONTACT–BECU, PLATED WITH 25 MIN. GOLD OVER 50–100µ IN NICKEL.
5. STAMPED CONTACT–BECU, PLATED WITH GOLD FLASH OVER 50–100µ IN NICKEL.
6. ELECTRICAL:
   CONTACT RESISTANCE: 10 MILLIOHMS MAX
   CONTACT RATING: 3 AMPS
   CAPACITANCE: 1.0 pF PER MIL–STD–202, METHOD 305
   INSULATION RESISTANCE: 5000 OHMS MIN @ 500 VDC PER MIL–STD–1344, METHOD 3003.1
   DIELECTRIC WITHSTANDING VOLTAGE: 1000 VOLTS (RMS) PER MIL–STD–1344, METHOD 3001.1
7. MECHANICAL:
   AFTER INSERTION FORCE: 179 GRAMS AVG
   AFTER WITHDRAWAL FORCE: 63 GRAMS AVG
   ACCEPTS IC PIN–.009"x.015" THROUGH .011"x.020", OR .016" TO .021" DIAMETER, .150/.105 LONG
8. ENVIRONMENTAL:
   OPERATING TEMPERATURE: –55°C TO –105°C

FINISH	FIG	F	E	D	C	B	"A" MAX	NO. OF POSN	PART NO.
3 4	4	.150	–	–	.900	1.100	1.200	24	5–1571551–3
3 4	2	.150	.500	.900	1.500	1.900	2.000	40	5–1571551–2
3 4	2	.150	.500	.900	1.500	1.700	1.800	36	5–1571551–1
3 4	2	.150	.500	.900	–	1.500	1.600	32	5–1571551–0
3 4	2	.150	.500	.900	–	1.300	1.400	28	4–1571551–9
3 4	2	.150	.500	.900	–	1.100	1.200	24	4–1571551–8
3 4	4	.175	–	–	.800	1.000	1.150	22	4–1571551–7
3 4	1	.250	–	–	.500	.900	1.000	20	4–1571551–6
3 4	1	.150	–	–	.600	.800	.900	18	4–1571551–5
3 4	1	.150	–	–	.500	.300	.800	16	4–1571551–4
3 4	1	.150	–	–	.400	.600	.700	14	4–1571551–3
3 4	3	.200	–	–	–	.300	.400	8	4–1571551–2
3 4	3	–	–	–	–	.200	.300	6	4–1571551–1
3 5	4	.150	–	–	.900	1.100	1.200	24	3–1571551–3
3 5	2	.150	.500	.900	1.500	1.900	2.000	40	3–1571551–2
3 5	2	.150	.500	.900	1.500	1.700	1.800	36	3–1571551–1
3 5	2	.150	.500	.900	–	1.500	1.600	32	3–1571551–0
3 5	2	.150	.500	.900	–	1.300	1.400	28	2–1571551–9
3 5	2	.150	.500	.900	–	1.100	1.200	24	2–1571551–8
3 5	4	.175	–	–	.800	1.000	1.150	22	2–1571551–7
3 5	1	.250	–	–	.500	.900	1.000	20	2–1571551–6
3 5	1	.150	–	–	.600	.800	.900	18	2–1571551–5
3 5	1	.150	–	–	.500	.300	.800	16	2–1571551–4
3 5	1	.150	–	–	.400	.600	.700	14	2–1571551–3
3 5	3	.200	–	–	–	.300	.400	8	2–1571551–2
3 5	3	–	–	–	–	.200	.300	6	2–1571551–1
2 3	4	.150	–	–	.900	1.100	1.200	24	1–1571551–3
2 3	2	.150	.500	.900	1.500	1.900	2.000	40	1–1571551–2
2 3	2	.150	.500	.900	1.500	1.700	1.800	36	1–1571551–1
2 3	2	.150	.500	.900	–	1.500	1.600	32	1–1571551–0
2 3	2	.150	.500	.900	–	1.300	1.400	28	1571551–9
2 3	2	.150	.500	.900	–	1.100	1.200	24	1571551–8
2 3	4	.175	–	–	.800	1.000	1.150	22	1571551–7
2 3	1	.250	–	–	.500	.900	1.000	20	1571551–6
2 3	1	.150	–	–	.600	.800	.900	18	1571551–5
2 3	1	.150	–	–	.500	.300	.800	16	1571551–4
2 3	1	.150	–	–	.400	.600	.700	14	1571551–3
2 3	3	.200	–	–	–	.300	.400	8	1571551–2
2 3	3	–	–	–	–	.200	.300	6	1571551–1

THIS DRAWING IS A CONTROLLED DOCUMENT.

DIMENSIONS: INCHES

TOLERANCES UNLESS OTHERWISE SPECIFIED:
0 PLC ± –
1 PLC ± –
2 PLC ± –
3 PLC ± .005
4 PLC ± –
ANGLES ± –

MATERIAL –
FINISH –

DWN T.KRAYBILL 08OCT03
CHK K.WRIGHT –
APVD K.WRIGHT –
PRODUCT SPEC –
APPLICATION SPEC –
WEIGHT –

tyco Electronics
Tyco Electronics Corporation
Harrisburg, Pa 17105–3608

NAME
CLOSED FRAME DIP, ECONOMY LEAD FREE
(REF AUGAT 500 SERIES)
ECONOMY (STAMPED CONTACT)

SIZE	CAGE CODE	DRAWING NO	RESTRICTED TO
A1	00779	C–1571551	–

CUSTOMER DRAWING | SCALE 4:1 | SHEET 1 OF 1 | REV C