REVISION

A	TB	D Cheung
6/19/2003	ECN-26615	
RELEASE FOR PRODUCTION		
B	TW	E MINGS
11/29/2004	ECN-41176	
ADD NOTE 8, UPDATE FOOTPRINT.		
C	JB	M BOONE
5/6/2009	ECN-109863	
BOM: CHG "POLYIMIDE FILM (KAPTON)" TO "POLYIMIDE FILM"; SECTION "A"-"A": CHG DIM .1280 TO .1280 +.0030/-.0010.		

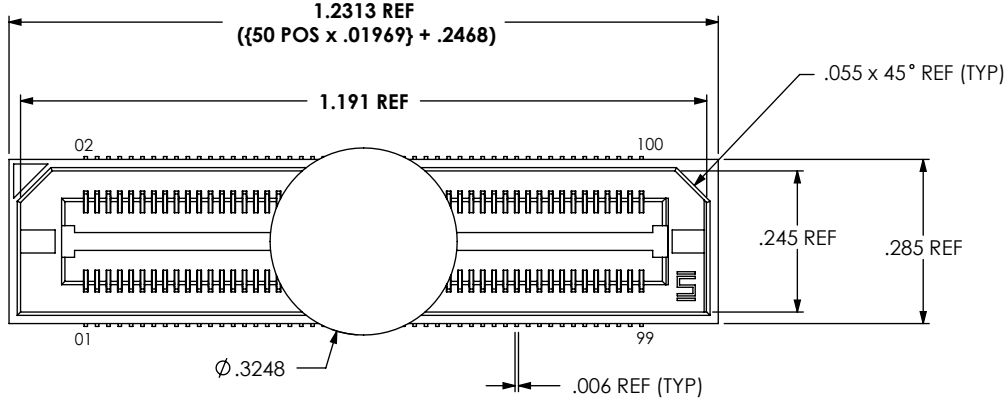

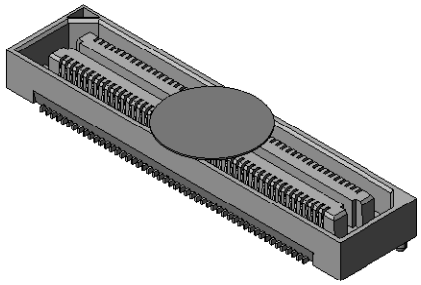

NOTES:

1. **50 POS NOT AVAILABLE AS STD.**
2. **ADD KAPTON PAD AND PACKAGE IN TAPE & REEL.**
3. BURR ALLOWANCE: .0015 MAX.
4. MINIMUM PUSHOUT FORCE: .5 OZ.
5. MAXIMUM ALLOWABLE BOW: .002 INCH/INCH AFTER ASSEMBLY.
6. PARTS TO BE PACKAGED IN TUBES.
7. ⟨C⟩ REPRESENTS A CRITICAL DIMENSION.
8. HOLES ARE FOR OPTIONAL AGILENT SHROUD NOT SUPPLIED BY SAMTEC.

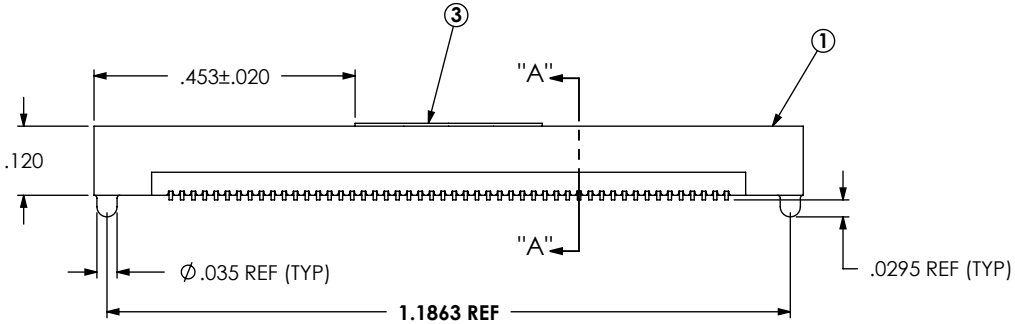

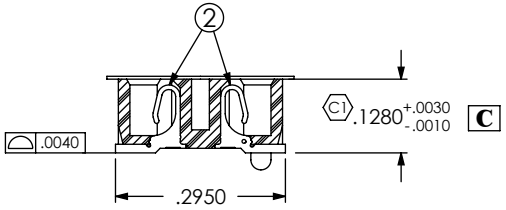

SECTION "A"-"A"

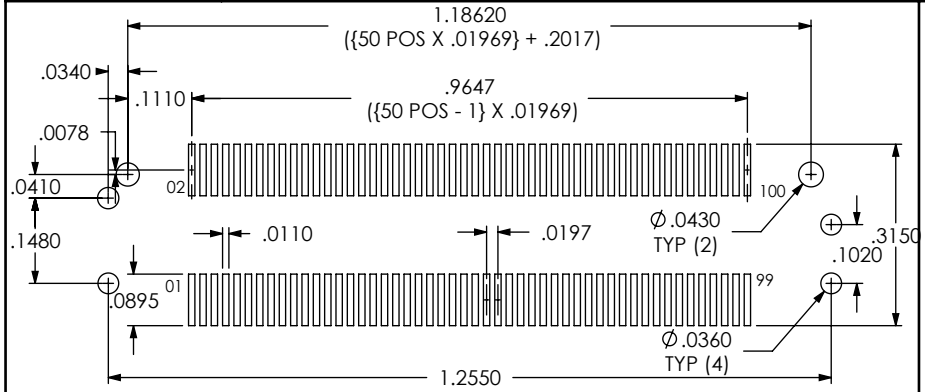

RECOMMENDED P.C. BOARD LAYOUT

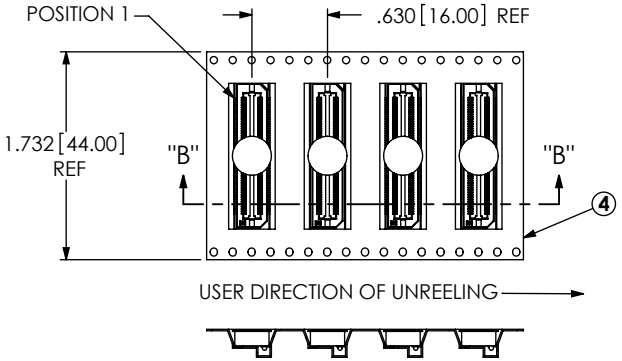

TAPE & REEL VIEW

(POCKET NOT DETAILED)

SECTION "B"-"B"

ITEM NO.	PART NUMBER	QUANTITY	MATERIAL
1	**BSH-050-01-D-A**	1.00000	VECTRA E130i, COLOR: BLACK
2	C-126-01-L	100.00000	PHOS BRONZE, 510 SPRING TEMPER
3	**K-850-650**	.50000	POLYIMIDE FILM (KAPTON)
4	**CT-ASP717MS**	1.00000	CONDUCTIVE POLYMER

C

UNLESS OTHERWISE SPECIFIED, DIMENSIONS ARE IN INCHES.
TOLERANCES ARE:
DECIMALS .XX: ±.01 .XXX: ±.005 .XXXX: ±.0020
ANGLES 2°

PROPRIETARY NOTE
THIS DOCUMENT CONTAINS INFORMATION CONFIDENTIAL AND PROPRIETARY TO SAMTEC, INC. AND SHALL NOT BE REPRODUCED OR TRANSFERRED TO OTHER DOCUMENTS OR DISCLOSED TO OTHERS OR USED FOR ANY PURPOSE OTHER THAN THAT WHICH IT WAS OBTAINED WITHOUT THE EXPRESSED WRITTEN CONSENT OF SAMTEC, INC.

samtec
520 PARK EAST BLVD, NEW ALBANY, IN 47150
PHONE: 812-944-6733 FAX: 812-948-5047
e-Mail: info@SAMTEC.com code: 55322

DO NOT SCALE DRAWING SHEET SCALE: 3:1

PLATING:
.000010 GOLD OVER .000050 NICKEL IN CONTACT AREA
.000003 MIN GOLD OVER .000050 NICKEL ON REMAINDER

DESCRIPTION: .5mm DOUBLE ROW SOCKET ASSEMBLY

DWG. NO. ASP-65067-01-K-TR

BY: BRYANT 06/19/03 SHEET 1 OF 1

F:\DWG\SW\ASP\65000\ASP-65067-01-K-TR.SLDDRW