THIS DRAWING IS UNPUBLISHED. RELEASED FOR PUBLICATION -.-.
© COPYRIGHT - By - ALL RIGHTS RESERVED.

LOC	DIST
GP	00

REVISIONS

P	LTR	DESCRIPTION	DATE	DWN	APVD
	K	REVISED PER ECO-12-010481	06JUN12	AZ	AC

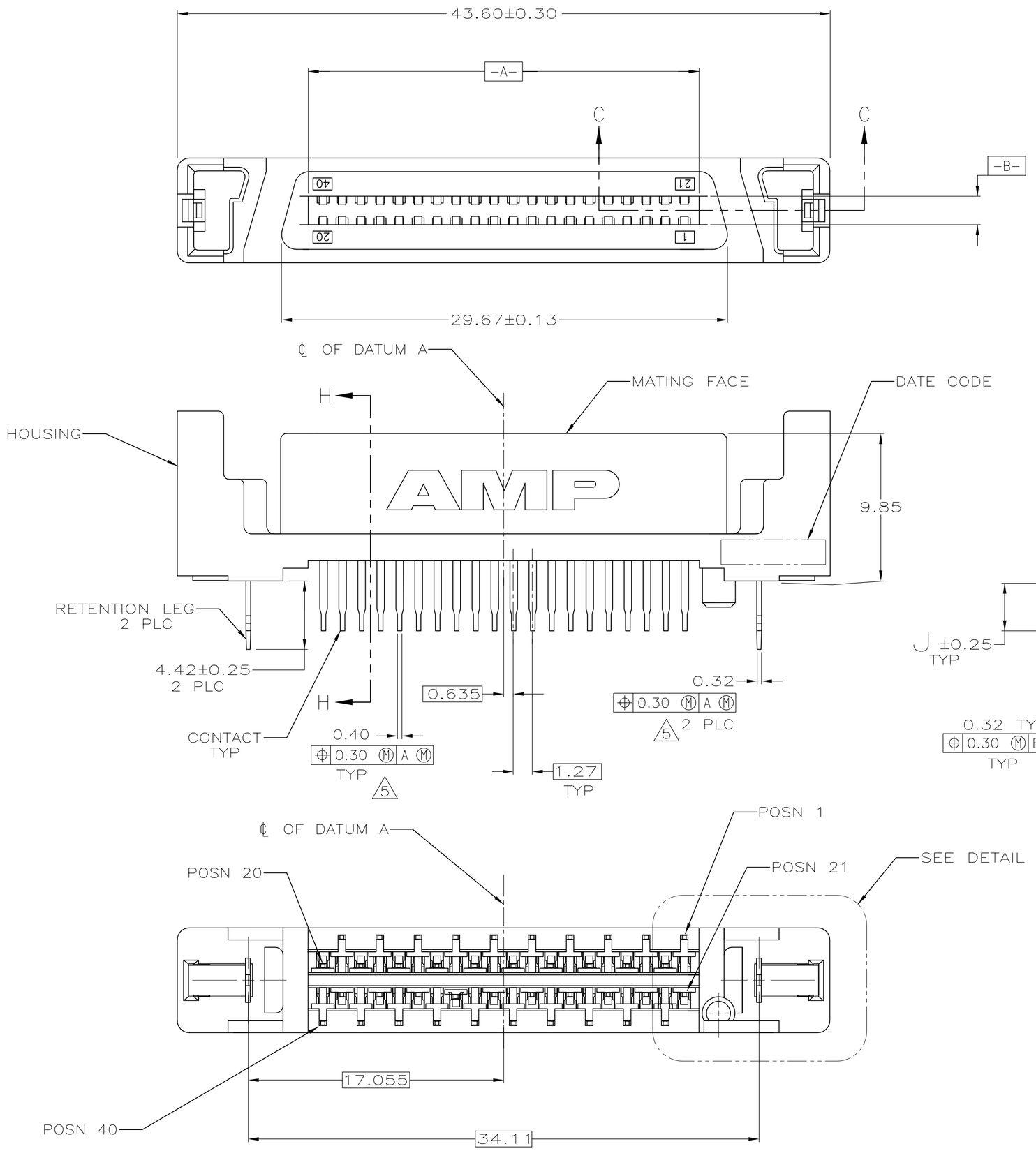

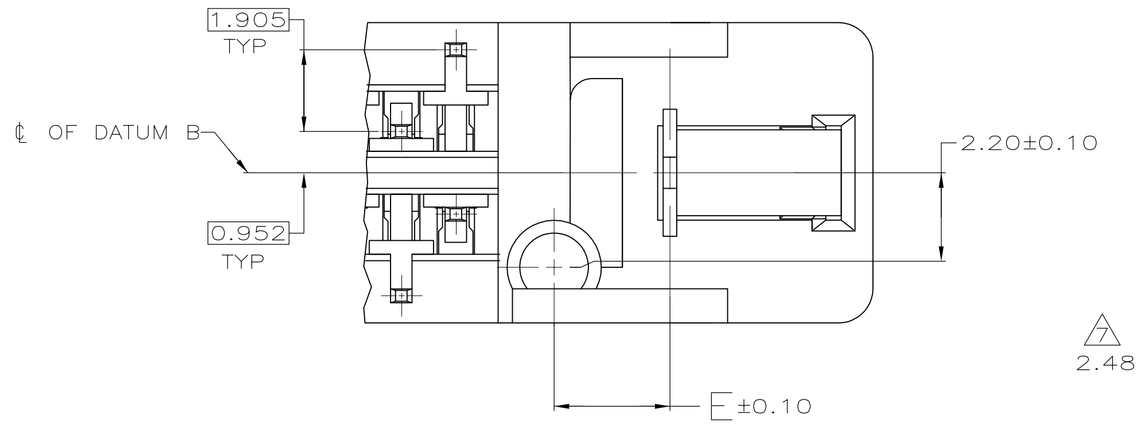

DETAIL G
SCALE 10:1

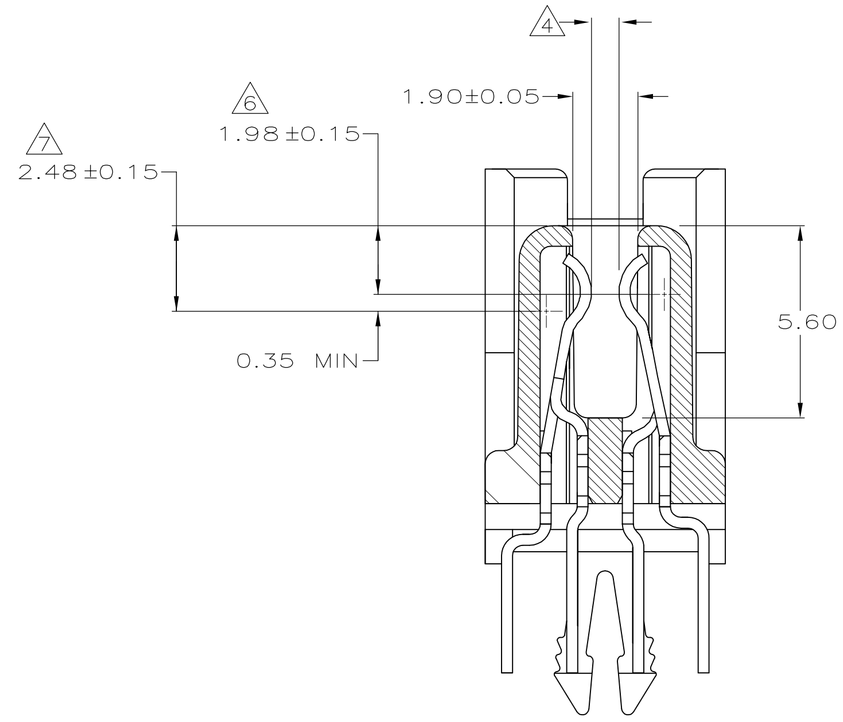

SECTION H–H
SCALE 8:1

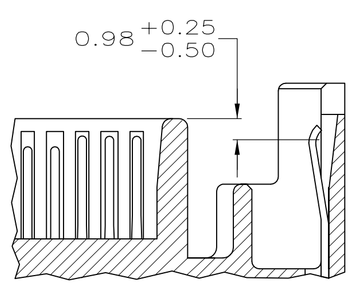

SECTION C–C

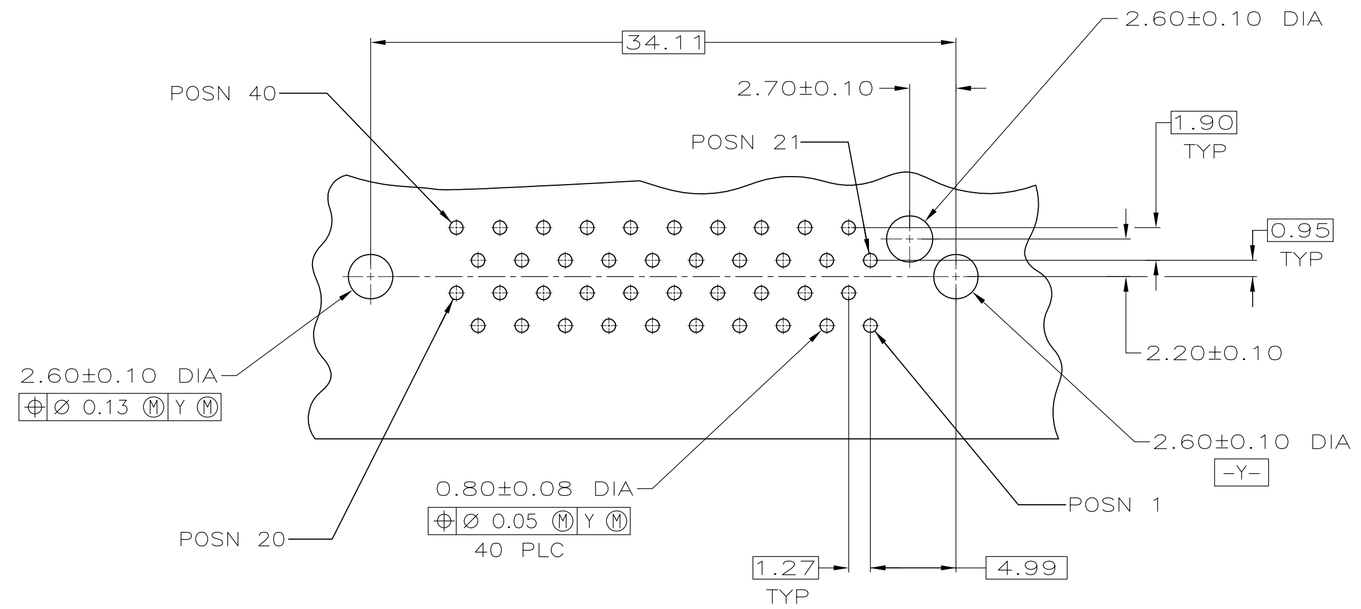

RECOMMENDED PC BOARD
MOUNTING DIMENSIONS
COMPONENT SIDE
SCALE 4:1

	FINISH	J	NO OF POSN	PART NUMBER
	8 9	3.18	40	787317-4
OBSOLETE	2 3	4.57	40	787317-3
OBSOLETE	2 3	3.18	40	787317-2
OBSOLETE	2 3	3.18	40	787317-1

1. HOUSING: LCP, UL 94V-0 RATED, BLACK.
   CONTACTS: PHOSPHOR BRONZE.
   RETENTION LEGS: BRASS.
2. CONTACTS: 0.76 µm GOLD FOR A LENGTH 1.20 MIN STARTING 0.50 MAX FROM MATING END, 3.81 µm MIN TIN-LEAD FOR A LENGTH OF 3.43 MIN FROM OPPOSITE END, BOTH OVER 1.27 µm MIN NICKEL.
3. RETENTION LEGS: 3.81 µm MIN TIN-LEAD OVER 1.27 µm MIN NICKEL.
4. CONNECTOR WILL ACCOMMODATE MATING PRINTED CIRCUIT BOARD OF 1.60±0.07 THICKNESS.
5. POSITION TOLERANCE APPLIES AT CONTACT TIP ONLY.
6. CONTACTS 21, 22, 23, 26, 29, 32, 35-40 ARE POSITIONED TOWARD THE MATING FACE. (FIRST MATE)
7. CONTACTS 1-20, 24, 25, 27, 28, 30, 31, 33, 34 ARE POSITIONED AWAY FROM THE MATING FACE. (SECOND MATE)
8. CONTACTS: 0.76 µm GOLD FOR A LENGTH 1.20 MIN STARTING 0.50 MAX FROM MATING END, 3.81 µm MIN MATTE TIN FOR A LENGTH OF 3.43 MIN FROM OPPOSITE END, BOTH OVER 1.27 µm MIN NICKEL.
9. RETENTION LEGS: 3.81 µm MIN HALT TIN.

THIS DRAWING IS A CONTROLLED DOCUMENT.

DIMENSIONS: mm

TOLERANCES UNLESS OTHERWISE SPECIFIED:
0 PLC ± –
1 PLC ± –
2 PLC ± 0.10
3 PLC ± –
4 PLC ± –
ANGLES ± –

MATERIAL 1

FINISH SEE TABLE

DWN	C.DORWART	06/07/95
CHK	R.STONE	06/16/95
APVD	M.RUPERT	06/16/95
PRODUCT SPEC	—	
APPLICATION SPEC	114-6061	
WEIGHT	—	

TE Connectivity

NAME: RECEPTACLE ASSEMBLY, VERTICAL, CHAMP BLINDMATE .050 SERIES I

SIZE	CAGE CODE	DRAWING NO	RESTRICTED TO
A1	00779	C-787317	—

CUSTOMER DRAWING | SCALE 5:1 | SHEET 1 OF 1 | REV K

4805 (3/11)