PART NAME	NEMA 4X ENCLOSURE	PART No.	AN-1312, AN-1312-G, AN-2812 & AN-2812-B	REV. DATE	2-12-04

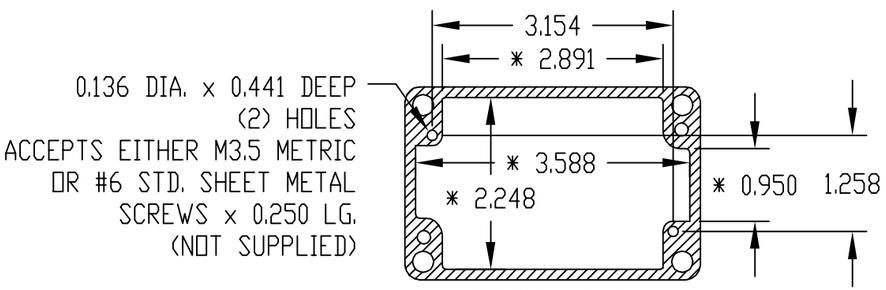

SECTION "B-B"
* DIMENSIONS ARE AT BOTTOM OF ENCLOSURE

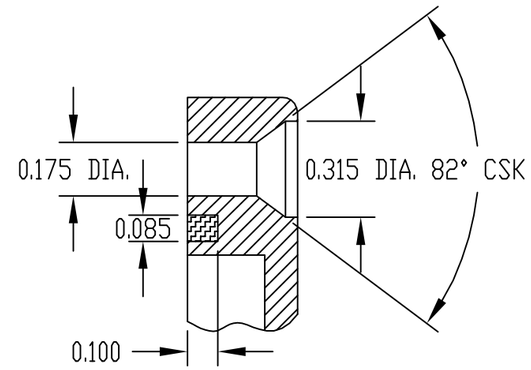

DETAIL "D"
(4 PLACES)

MATERIAL: ALUMINUM ALLOY #ADC-10

FINISH: NATURAL (NO SUFFIX)
GRAY (SUFFIX -G)
SMOOTH BLACK (SUFFIX -B)

FOUR (4) M4 x 20mm (0.787") LG. SCREWS SUPPLIED FOR ASSEMBLY.

TWO (2) M3.5 x 6mm LG. NICKEL PLATED SCREWS AND WASHERS SUPPLIED FOR GROUNDING

ALL DIMENSIONS HAVE ±0.015 TOLERANCE UNLESS OTHERWISE SPECIFIED

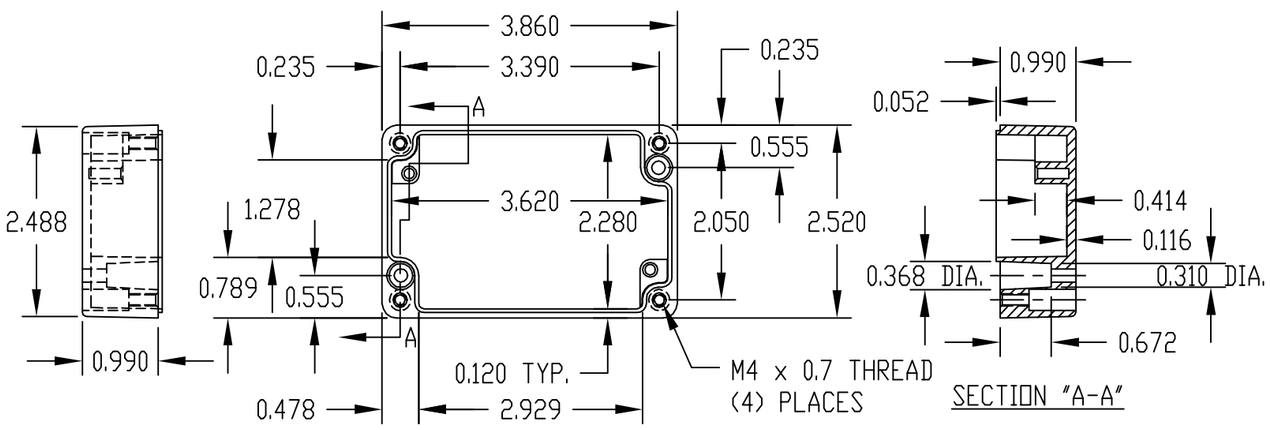

SECTION "A-A"

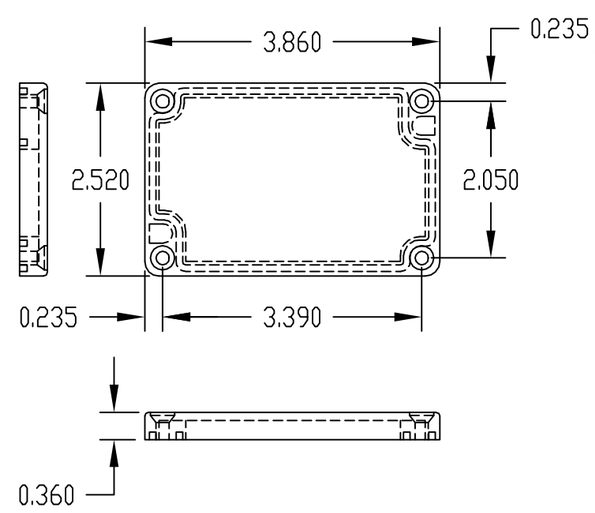

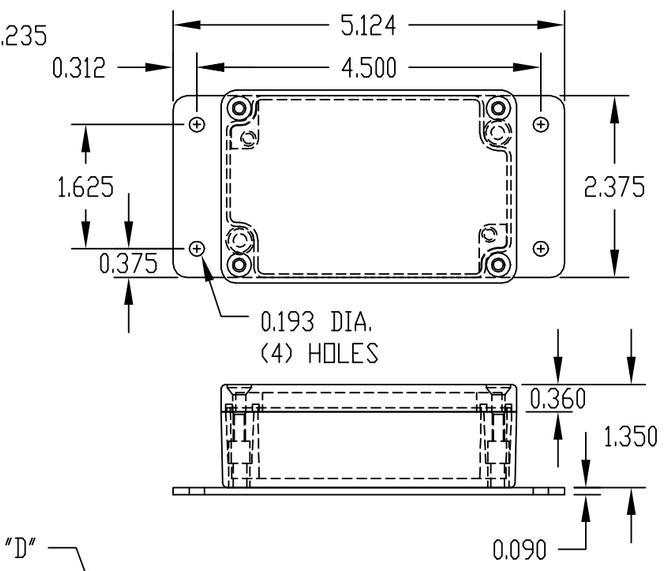

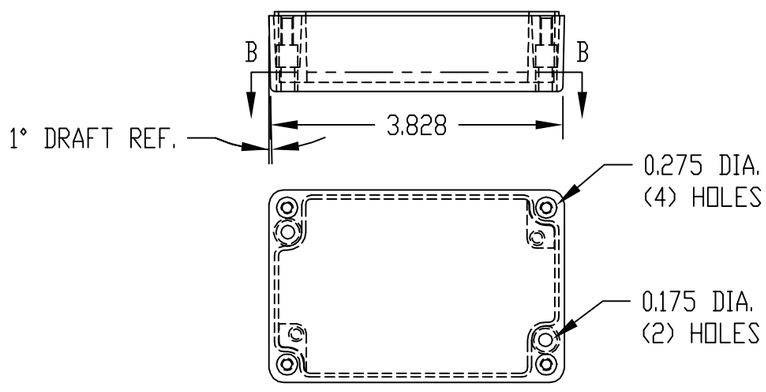

BODY

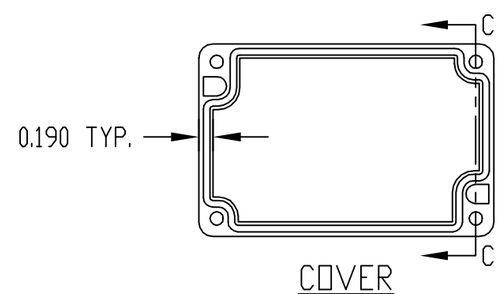

COVER

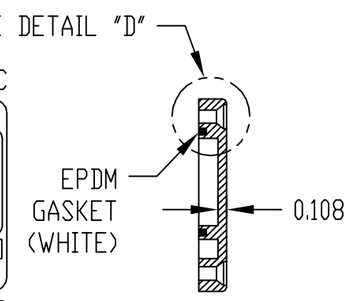

SECTION "C-C"

PART NO. AN-2812 & AN-2812-B ARE SUPPLIED WITH A WELDED ON MOUNTING BRACKET ONLY.