PART NAME	DIN RAIL MOUNT BOX	PART No.	DB-4702

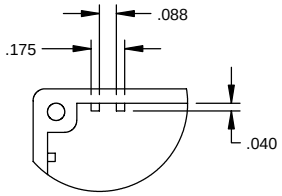

DETAIL B

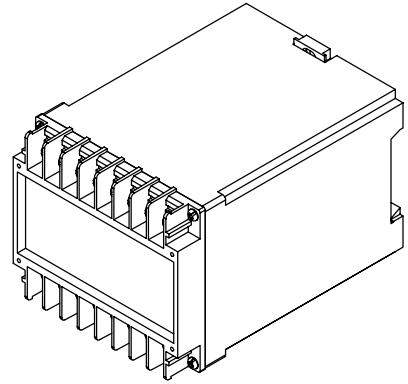

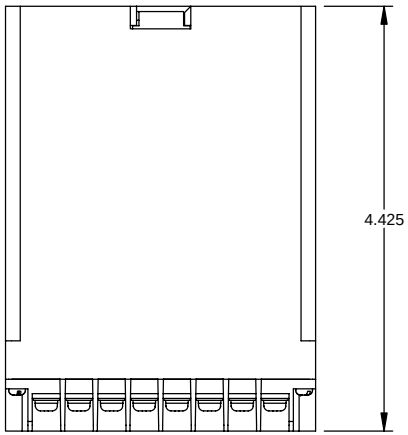

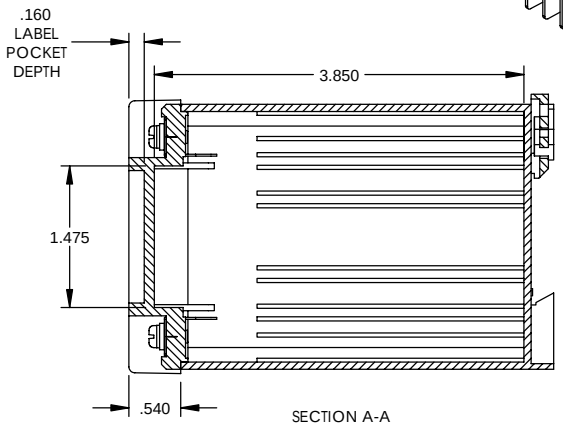

SECTION A-A

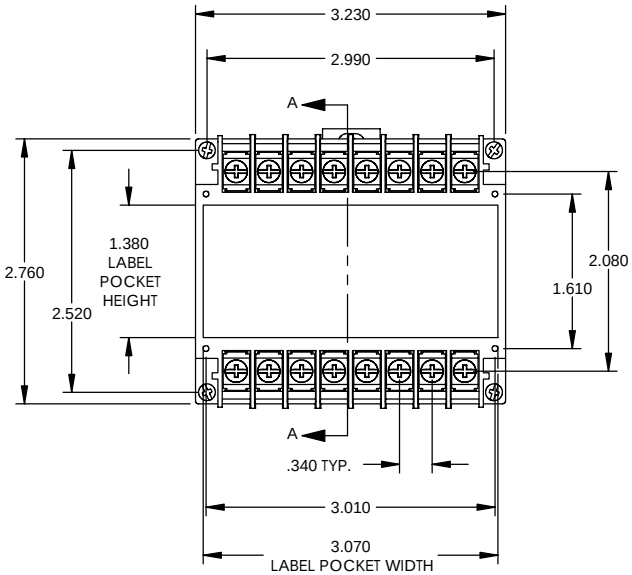

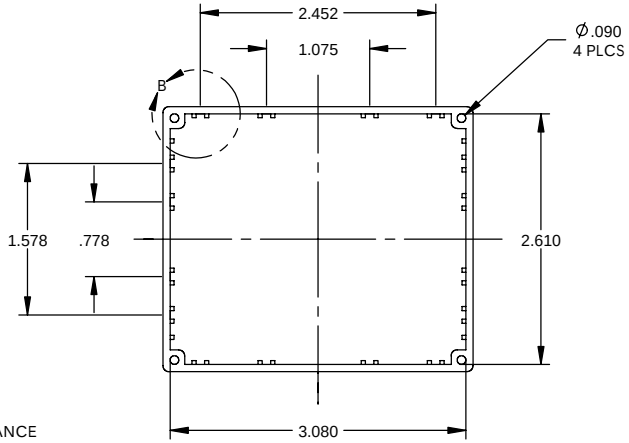

MATERIAL: UL94V-0 ABS PLASTIC

FINISH: LIGHT GRAY

FOUR (4) M3 SCREWS SUPPLIED TO ATTACH FRONT PANEL

ALL DIMENSIONS HAVE A ±.015 TOLERANCE UNLESS OTHERWISE SPECIFIED

ALL CONTACTS ARE TIN PLATED BRASS RATED AT 10 AMPS

REV: 12/17/04