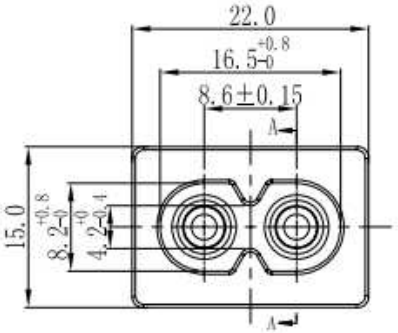

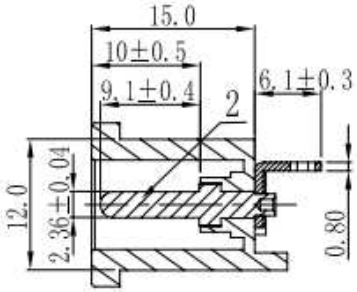

SECTION A-A

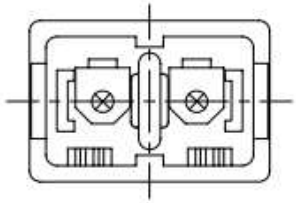

NOTES:

1.Insulator: PBT
2.Contact : PIN Alloy COPPER ⌀2.36 Nickel PLATING
3.Soldering: PIN Alloy COPPER TIN PLATING
4.Electrical: 2.5A /250V~
5.Approval: UL, CSA, VDE, SEMKO, NEMKO, DEMKO, FIMKO, CCC

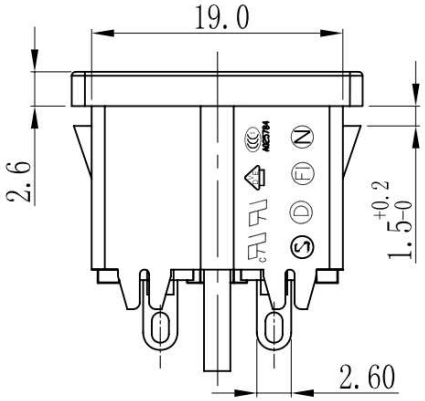

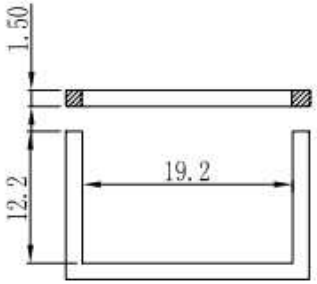

PANEL CUT-OUT

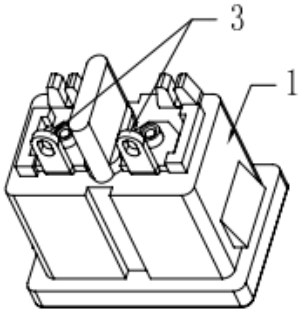

ITEM	PART NAME	Q'TY	MATERIAL
3	TERMINAL	2	Cu Plated Sn
2	Pin	2	Cu Plated Ni
1	BODY	1	PBT

RoHS compliant

Scale	1:1						Date	Name
TOLERANCE						Drawn	14.12.2007	N.Schulz
0-10	±0.1					Approved	17.01.2013	Winnie
10-30	±0.3							
30-100	±0.5	③	Change of the plant	17.01.2013	Winnie			
DIM	TOL	②	Update	08.07.2009	Dean			
		①	Drawn	14.12.2007	N.Schulz			
UNIT	mm	Id.	Modification	Date	Name			

Customer-No.

ASSMANN WSW-No. A-8F/SP

Drawing-No. ASS 0889G CO rev03

Replace SHEET

ASSMANN WSW components