Feb.1.2018 Copyright 2018 HIROSE ELECTRIC CO., LTD. All Rights Reserved.

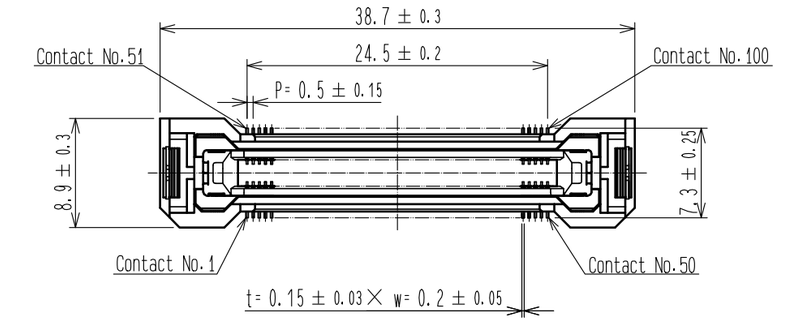

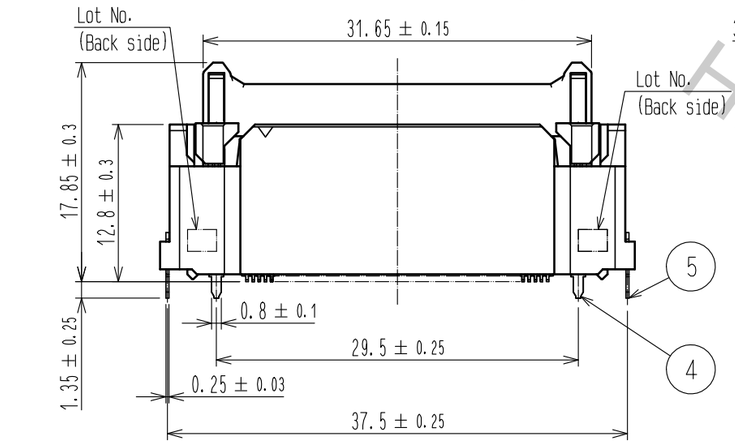

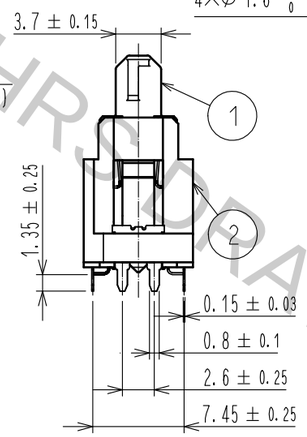

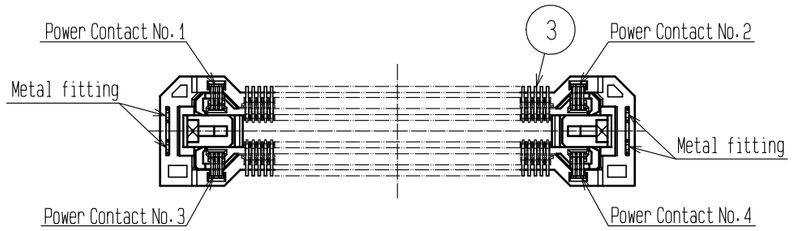

RECOMMENDED LAND PATTERN DIMENSION OF PCB

△1 (PCB THICKNESS: t=1.6mm)

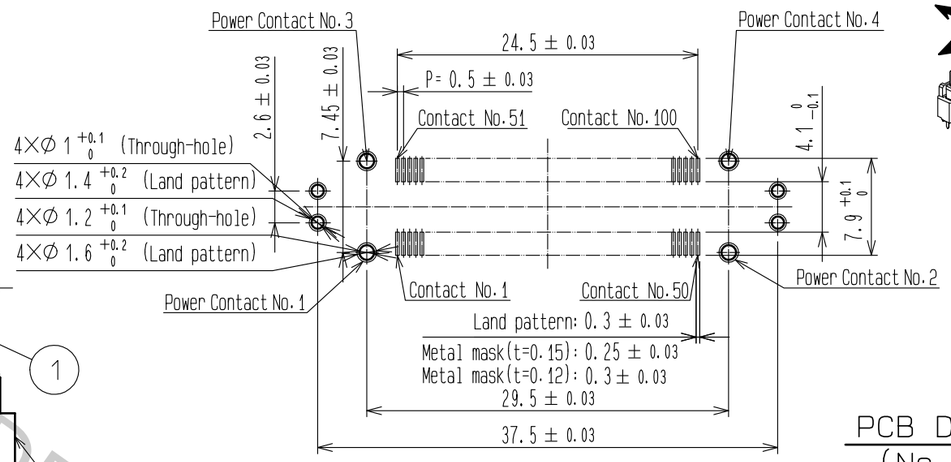

3 FLOATING RANGE

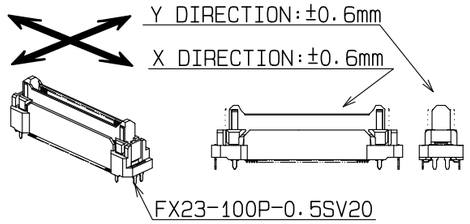

PCB DISTANCE

(No scale)

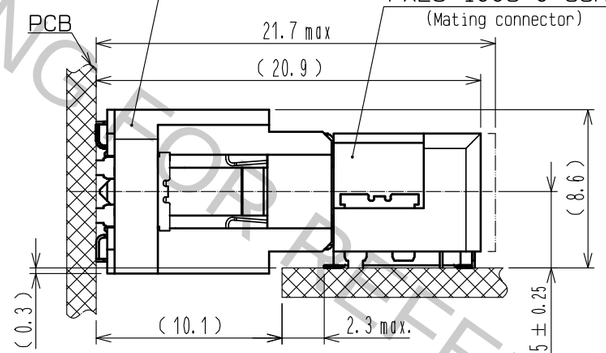

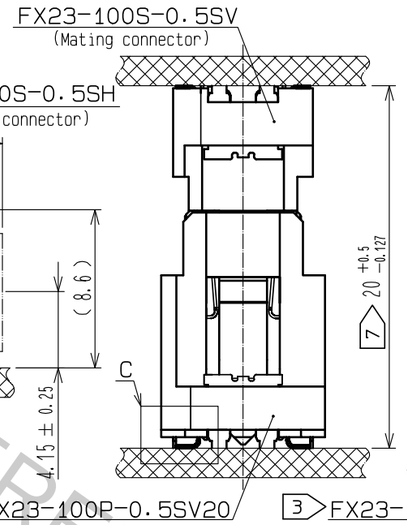

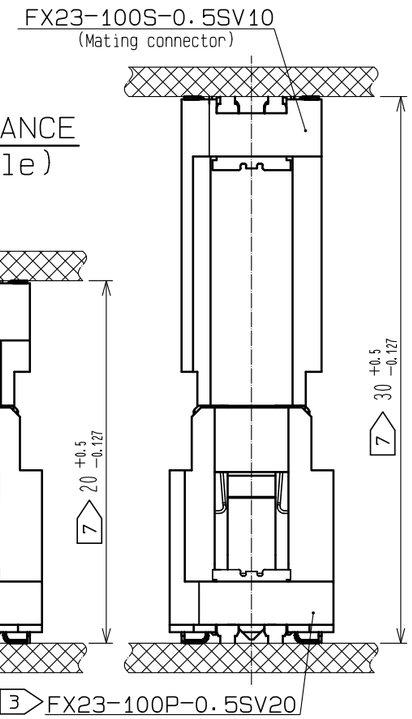

C (10:1)

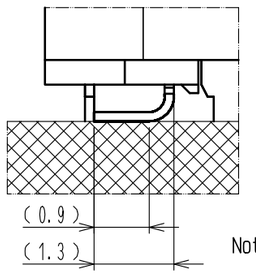

2 DRAWING FOR PACKING (No scale)

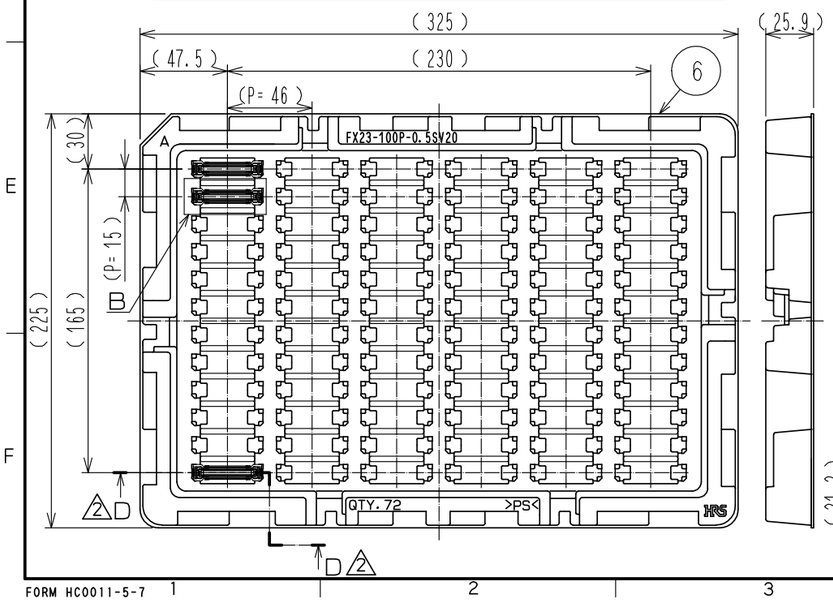

4 7 B (1:1)

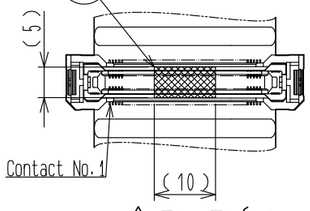

△2 D−D (1:1)

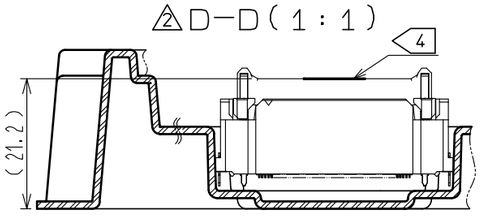

Note

1. Lead CO-Planarity is 0.1mm MAX.
2. This is packaged in tray. (72pcs/tray)
3. Floating range of this connector is ±0.6mm MAX.
   △2 The maximum cycle time of the floating operation is in accordance with the mating cycle of the connector.
4. It shows the vacuum pickup area. Remove the mylar tape before mating connectors.
5. Blemish and hit mark can be occured through out the manufacturing process which doesn't affect quality level.
6. The dimensions in parentheses are for references.
7. Please use the connectors within the specified PCB distance.

NO.	MATERIAL	FINISH , REMARKS
3	COPPER ALLOY	CONTACT AREA: GOLD 0.1μm LEAD AREA: GOLD 0.03μm UNDER PLATING: NICKEL 1.3μm
2	POLYAMIDE	BLACK UL94V-0
1	POLYAMIDE	BLACK UL94V-0

NO.	MATERIAL	FINISH , REMARKS
7	POLYIMIDE	(TAPE FOR VACUUM PICKUP)
6	POLYSTYRENE	(TRAY)
5	BRASS	LEAD AREA: TIN-PLATING 3μm UNDER PLATING: NICKEL 1μm
4	COPPER ALLOY	CONTACT AREA: GOLD 0.1μm LEAD AREA: TIN-PLATING 1μm UNDER PLATING: NICKEL 1.3μm

UNITS	SCALE	COUNT	DESCRIPTION OF REVISIONS	DESIGNED	CHECKED	DATE
mm	2 : 1	△2 4	DIS-F-00001099	TS.00N0	KN.SHIBUYA	16.02.17

HRS HIROSE ELECTRIC CO., LTD.

APPROVED	: HS.OKAWA	14.07.25	DRAWING NO. EDC-353548-00-00
CHECKED	: KN.SHIBUYA	14.07.25	PART NO. FX23-100P-0.5SV20
DESIGNED	: TS.00N0	14.07.25	CODE NO. CL573-3105-6-00 △2 1/1
DRAWN	: TS.00N0	14.07.25	

HRS DRAWING FOR REFERENCE ONLY