P/N	APPLICABLE NOTE(S)	A
−1CC	1,2	.057
−1CCSF	1,2	.057
−2CC	1,2	.125
−2CCSF	1,2	.125

REVISIONS				
ZONE	REV	DESCRIPTION	DATE	BY
−	A	ECO 19913	01.22.07	SLM

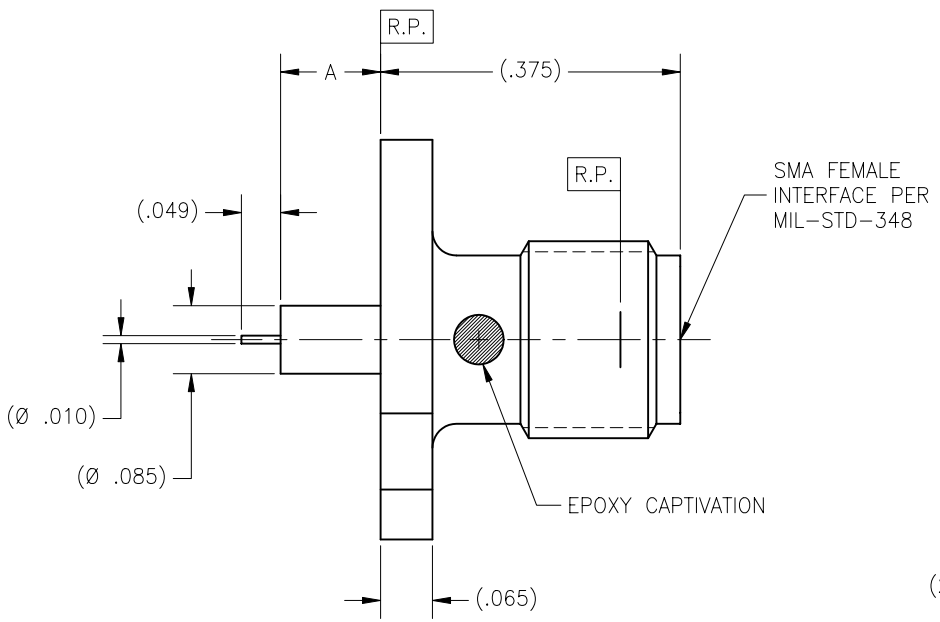

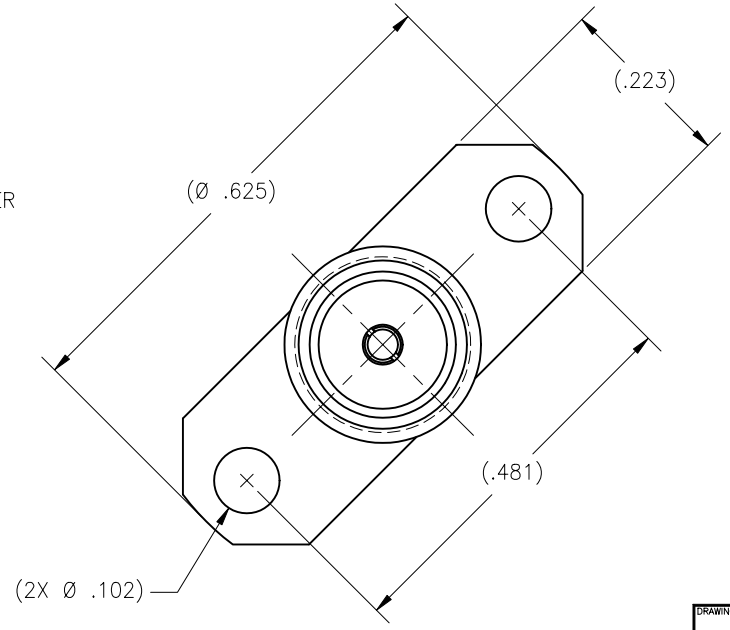

DRAWING NO.	REV.
5309	A

MATERIAL(S):

Body:
303 sst per ASTM A−582.
Center Conductor:
BeCu alloy per ASTM B−196.
Dielectric:
PTFE per ASTM D−1710.
Epoxy:
Sigma VF Type HV

ELECTRICAL:

Impedance: 50 Ohms nominal.
Freqancy Range: DC to 18 GHz.
VSWR: 1.05 + .007*f(GHz)
Insertion Loss: .04 x $\sqrt{f(GHz)}$ dB max.
Working Voltage: 335 Vrms max @ sea level.
DWV: 1,000 Vrms at sea level. Test at 60 Hz.
R.F. HiPot Voltage: 670 Vrms @ 7.5 MHz.
Corona Level: 250 Vrms @ 70,000 ft.
Insulation Resistance: 5,000 MegOhms min.
Contact Resistance:
Center Contact: 4.0 Milliohm max.
Outer Contact: 2.0 Milliohm max.

MECHANICAL:

Mating Characteristics:
Interface per Mil−Std−348.
Connector Durability:
500 cycles min @ 12 cycles/minute max.
Permeability: Less than 2.0 mu.
Center Contact Captivation:
Axial Force: 6 pounds min.
Radial Torque: 4 inch−ounces min.

ENVIRONMENTAL:

Temperature Range: −55°C to +165°C.
Thermal Shock:
Mil−Std−202, Method 107, Test Cond. B.
Moisture Resistance:
Mil−Std−202, Method 106, Insulation resistance at least 200 MegOhms within 5 minutes after removal from humidity.
Corrosion:
Mil−Std−202, Method 101, Test Cond. B.
Vibration:
Mil−Std−202, Method 204, Test Cond. D.
Shock:
Mil−Std−202, Method 213, Test Cond. I.

FINISH(ES):

Body (For CCSF's):
Passivate per ASTM A−967.
Body (For CC's):
Gold plate per ASTM B−488, over nickel under plate per AMS−QQ−N−290.
Center Conductor:
Gold plate per ASTM B−488, over nickel under plate per AMS−QQ−N−290.

APPLICABLE TENSOLITE DOCUMENTS

WORK STD	PROD INST	ASSY INST
NA	NA	NA

NOTICE

THIS DRAWING EMBODIES A CONFIDENTIAL PROPRIETARY DESIGN ORIGINATED BY TENSOLITE COMPANY AND ALL DESIGN, MANUFACTURING REPRODUCTION, USE AND SALE RIGHTS REGARDING THE SAME ARE EXPRESSLY RESERVED. IT IS SUBMITTED UNDER A CONFIDENTIAL RELATIONSHIP FOR A SPECIFIED PURPOSE AND THE RECIPIENT AGREES BY ACCEPTING THIS DRAWING NOT TO SUPPLY OR DISCLOSE ANY INFORMATION REGARDING IT TO ANY UNAUTHORIZED PERSON TO INCORPORATE IN OTHER PROJECTS ANY SPECIAL FEATURES PECULIAR TO THIS DESIGN. ALL PATENT RIGHTS HERETO ARE EXPRESSLY RESERVED BY TENSOLITE COMPANY, LONG BEACH, CALIFORNIA 90815.

TOLERANCES AND NOTES EXCEPT AS NOTED

DIMENSIONS ARE IN INCHES.
LINEAR .XX ±.015 .XXX ±.005 ANGULAR ± 1/2°
FRACTION ± 1/32

1. MACHINE FINISH: 63 √ RMS
2. BREAK ALL SHARP EDGES .003 MAX.
3. MACHINED FILLETS .005 MAX.
4. MACHINED SURFACES SQUARE TO RESPECTIVE AXIS WITHIN .005 INCHES PER INCH.
5. MACHINED DIAMETERS CONCENTRIC WITHIN .002 T.I.R.
6. DIMENSIONS TO BE MET BEFORE PLATING.
7. CHAMFER ALL THREADS 45°.
8. THREADS PER H−28
9. REMOVE FRAYED EDGES ON TEFLON.
10. REMOVE ALL BURRS.

SEE NOTES	−	SEE NOTES	−
MATERIAL	SIZE	SPECIFICATION	PROCUREMENT

NEXT ASSY

APPROVAL INITIALS		DATE
DRAWN BY	ATV	10.24.01
CHECKED		
QUALITY		
ENGINEERING	ATV	01.23.07

Tensolite
HIGH PERFORMANCE CABLES & INTERCONNECT SYSTEMS
Long Beach, California 90815

TITLE
SMA FEMALE 2 HOLE FLANGE MOUNT
MICROSTRIP TRANSMISSION LINE TERMINATION

SCALE	SUB−DIRECTORY\FILENAME	SHEET 1 OF 1
8:1	OL_	

SIZE	CAGE CODE	DRAWING NO.	REV.
C	30990	5309	A