THIS DRAWING IS UNPUBLISHED. RELEASED FOR PUBLICATION -,- .
© COPYRIGHT - BY TYCO ELECTRONICS CORPORATION. ALL RIGHTS RESERVED.

LOC	DIST
AJ	16

REVISIONS

P	LTR	DESCRIPTION	DATE	DWN	APVD
	C	REV PER ECO-09-005412	10/9/2009	AEG	WKE
	C1	REVISED PER ECO-10-000444	19JAN10	KK	HMR

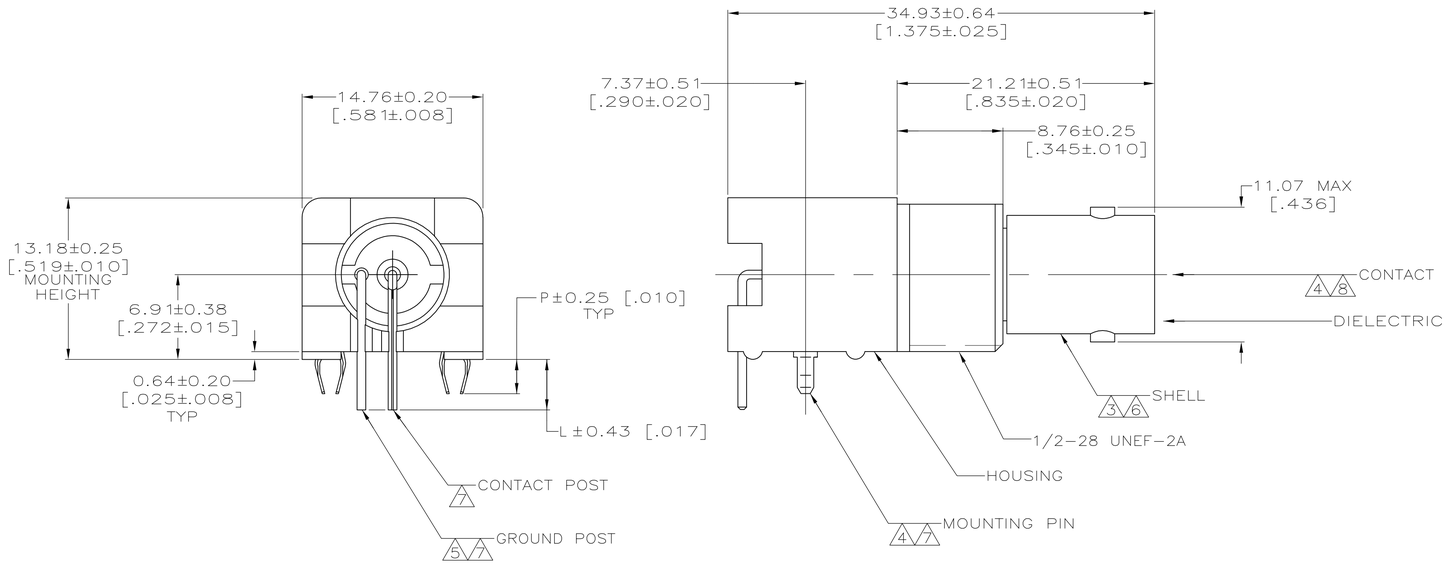

1. POLYESTER PBT PER MIL-M-24519, TYPE GPT-15F, UL94V-0 RATED, COLOR:BLACK
2. POLYMETHYLPENTENE, GENERAL PURPOSE
3. ZINC PER QQ-Z-363
4. PHOSPHOR BRONZE PER QQ-B-750
5. BRASS PER ASTM-B-453
6. NICKEL PLATE PER QQ-N-290, 3.81 μm [.000150] MINIMUM THICK
7. TIN PLATE PER ASTM-B-545. 3.81 μm [.000150] MINIMUM THICK
8. GOLD PLATE PER ASTM-B-488, 0.76 μm [.000030] MINIMUM THICK
9. USE INSTRUCTION SHEET 408-2769.
10. POLYESTER, PCT, GENERAL PURPOSE, 30% GLASS FILLED, UL94V-0 RATED, COLOR: GRAY
11. PTFE PER ASTM-D-1710
12. OBSOLETE PARTS: OBSOLETE CIS STREAMLINING PER D.RENAUD/D.SINISI

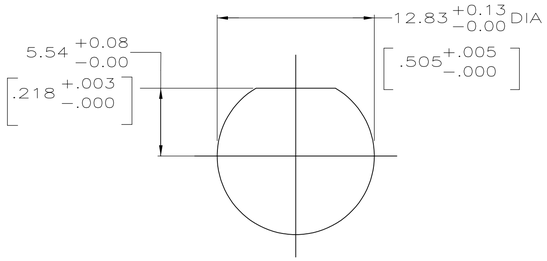

RECOMENDED PANEL CUTOUT

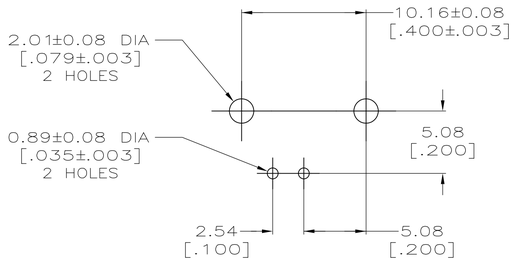

PCB CONFIGURATION

P	L	DIELECTRIC MATERIAL	HOUSING MATERIAL	PART NUMBER
2.79 [.110]	4.11 [.162]	1	10	5415218-6
2.79 [.110]	4.11 [.162]	2	10	5415218-5
12 OBSOLETE 2.79 [.110]	2.87 [.113]	2	1	~~5415218-3~~

THIS DRAWING IS A CONTROLLED DOCUMENT.

DIMENSIONS: mm [INCHES]

TOLERANCES UNLESS OTHERWISE SPECIFIED:
0 PLC ± -
1 PLC ± -
2 PLC ± -
3 PLC ± 0.05 [.002]
4 PLC ± -
ANGLES ± -

MATERIAL: SEE NOTES 1 - 6
FINISH: SEE NOTES 7 - 8

DWN: G. ATTADIA - DOCK5 22APR2005
CHK: J. HAVENER 22APR2005
APVD: J. LIPPERT 22APR2005
PRODUCT SPEC: 108-12078
APPLICATION SPEC: -
WEIGHT: -

Tyco Electronics
Tyco Electronics Corporation
Harrisburg, PA 17105-3608

NAME: JACK, RIGHT ANGLE, 50 OHM, PCB, BNC
-

SIZE	CAGE CODE	DRAWING NO	RESTRICTED TO
A1	00779	C-5415218	-

CUSTOMER DRAWING | SCALE 4:1 | SHEET 1 OF 1 | REV C1