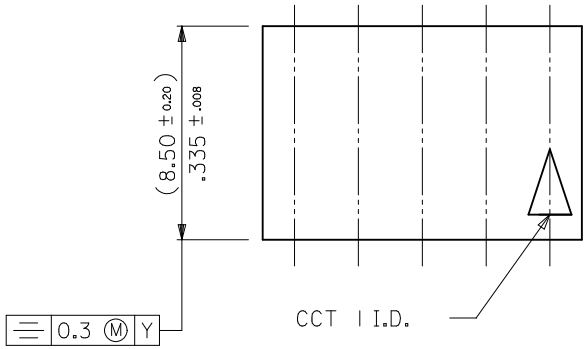

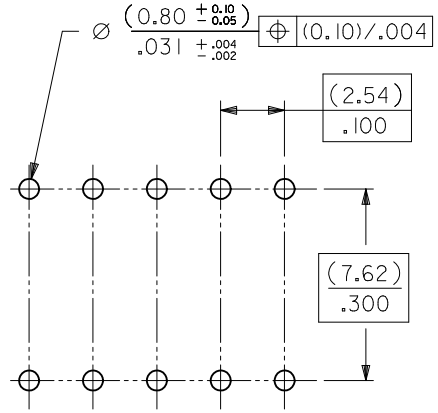

RECOMMENDED P.C. BOARD HOLE PATTERN FOR STRAIGHT PINS

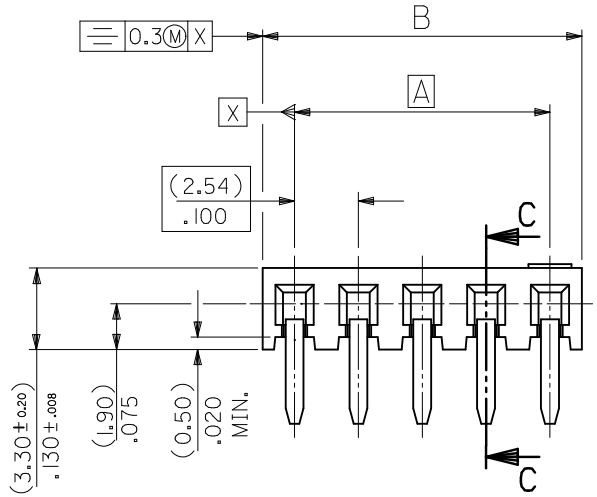

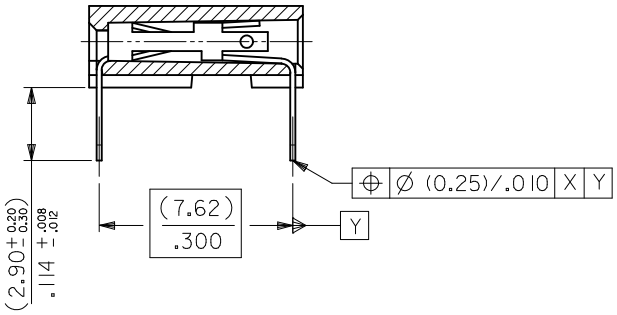

SECTION C-C SHOWING STRAIGHT PINS

NOTES

1) CONTACT-PLATED PHOSPHOR BRONZE. (SEE SHEET 2)

2) HOUSING
POLYESTER (PBT), 15% GLASS FILL, UL94-V0.
COLOR: BLACK.
ALSO
POLYAMIDE (PA4/6), 30% GLASS FILL, UL94-V0.
COLOR: NATURAL.

3) FOR (0.635)/.025 SQ. MALE PINS THE LENGTH MUST BE (5.65)/.222 MIN & (7.00)/.276 MAX. TO ENSURE GOOD CONNECTION WITH CONTACT.

4) PRODUCT SPECIFICATION: PS-99020-0001

5) PCB THICKNESS 1.6MM

UPDATE TOL.SYMMETRY	2010/05/26		
EC NO: S2010-0968	2010/06/04		
DRWN:SKANG	2010/06/05		
CH'KD:ATSEE			
APPR:MLONG			
AK		DESCRIPTION	REV

QUALITY SYMBOLS
F_A=0
F_C=0
F_P=0

GENERAL TOLERANCES (UNLESS SPECIFIED)

	mm	INCH
4 PLACES	± ---	± ---
3 PLACES	± ---	± ---
2 PLACES	± 0.15	± ---
1 PLACE	± ---	± ---
ANGULAR ± 2 °		

DRAFT WHERE APPLICABLE MUST REMAIN WITHIN DIMENSIONS

DIMENSION STYLE: MM ONLY	SCALE: NTS	DESIGN UNITS: METRIC	THIRD ANGLE PROJECTION
DRAWN BY: DB	DATE: 1987/07/14	TITLE: C-GRID III SINGLE ROW HORIZONTAL P.C BOARD CONN.	
CHECKED BY: D.MORIARTY	DATE: 2005/03/02		
APPROVED BY: J.DENNEHY	DATE: 2010/06/04	molex MOLEX INCORPORATED	
MATERIAL NO.: SEE TABLE		DOCUMENT NO.: SDA-90148	SHEET NO.: 1 OF 3
SIZE: A3	THIS DRAWING CONTAINS INFORMATION THAT IS PROPRIETARY TO MOLEX INCORPORATED AND SHOULD NOT BE USED WITHOUT WRITTEN PERMISSION		

tb_frame_A3_P_AM_T
Rev. F 2009/06/18

PART NO's - STRAIGHT PINS		PART NO.	NO OF CKTS.	DIM. A	DIM. $B^{(\pm^{0}_{0.30})}_{\pm^{0}_{.012}}$	NO. PER TUBE
STANDARD	CUSTOMER SPECIFIC					
90148-1X02	—	90148-4X02	2	(2.54) .100	(5.08) .200	105
03		03	3	(5.08) .200	(7.62) .300	72
04		04	4	(7.62) .300	(10.16) .400	52
05	—	05	5	(10.16) .400	(12.70) .500	44
06	90148-9X06	06	6	(12.70) .500	(15.24) .600	36
07	—	07	7	(15.24) .600	(17.78) .700	30
08		08	8	(17.78) .700	(20.32) .800	26
09		09	9	(20.32) .800	(22.86) .900	24
10		10	10	(22.86) .900	(25.40) 1.000	22
11		11	11	(25.40) 1.000	(27.94) 1.100	18
12		12	12	(27.94) 1.100	(30.48) 1.200	18
13		13	13	—	—	16
14		14	14	(33.02) 1.300	(35.56) 1.400	14
15		15	15	(35.56) 1.400	(38.10) 1.500	14
16		16	16	—	—	13
17		17	17	—	—	12
18		18	18	(43.18) 1.700	(45.72) 1.800	12
19		19	19	(45.72) 1.800	(48.26) 1.900	12
20		20	20	(48.26) 1.900	(50.80) 2.000	11
21		21	21	—	—	10
22		22	22	—	—	10
23		23	23	—	—	10
24		24	24	—	—	9
25		25	25	(60.96) 2.400	(63.50) 2.500	8
26		26	26	(63.50) 2.500	(66.04) 2.600	8
27		27	27	—	—	8
28		28	28	—	—	7
29		29	29	—	—	7
30		30	30	(73.66) 2.900	(76.20) 3.000	7
31		31	31			7
90148-1X32	—	90148-4X32	32	(78.74) 3.100	(81.28) 3.200	6

PLATING VERSION A

PRE-PLATED HOT DIP TIN
1.0 TO 2.5 microns (.00004" TO .00010").

PLATING VERSION E

1.27 TO 1.78 microns (.00005" TO .00007") NICKEL
OVERALL, 0.38 TO 0.64 microns (.000015" TO .000025")
GOLD ON CONTACT AREA (OVER NICKEL).
3 TO 5 microns (.00012" TO .00020") TIN
ON SOLDER TAILS (OVER NICKEL).

PLATING VERSION F.

1.27 TO 1.78 microns (.00005" TO .00007") NICKEL
OVERALL, 0.76 TO 1.0 microns (.00003" TO .00004")
GOLD ON CONTACT AREA (OVER NICKEL).
3 TO 5 microns (.00012" TO .00020") TIN
ON SOLDER TAILS (OVER NICKEL).

90148-XXYY

- YY — INDICATES NO. OF CIRCUITS
- X — PLATING CODE
  - 1 = VERSION A
  - 2 = VERSION E
  - 3 = VERSION F
- X —
  - 1 = STRAIGHT PINS POLYESTER
  - 9 = STRAIGHT PINS POLYESTER
  - 4 = STRAIGHT PINS NYLON 46

UPDATE TOL.SYMMETRY
EC NO: S2010-0968 2010/05/26
DRWN:SKANG 2010/06/04
CH'KD:ATSEE 2010/06/05
APPR:MLONG
DESCRIPTION
AK
REV

QUALITY SYMBOLS
F_A=0
F_C=0
F_P=0

GENERAL TOLERANCES (UNLESS SPECIFIED)

	mm	INCH
4 PLACES	± ---	± ---
3 PLACES	± ---	± ---
2 PLACES	± 0.15	± ---
1 PLACE	± ---	± ---
ANGULAR ± 2 °		

DRAFT WHERE APPLICABLE MUST REMAIN WITHIN DIMENSIONS

DIMENSION STYLE: MM ONLY
SCALE: NTS
DESIGN UNITS: METRIC
THIRD ANGLE PROJECTION

DRAWN BY: DB DATE: 1987/07/14
CHECKED BY: D.MORIARTY DATE: 2005/03/02
APPROVED BY: J.DENNEHY DATE: 2010/06/04

TITLE: C-GRID III SINGLE ROW HORIZONTAL P.C BOARD CONN.

molex MOLEX INCORPORATED

MATERIAL NO.: SEE TABLE
DOCUMENT NO.: SDA-90148
SHEET NO.: 2 OF 3
SIZE: A3

THIS DRAWING CONTAINS INFORMATION THAT IS PROPRIETARY TO MOLEX INCORPORATED AND SHOULD NOT BE USED WITHOUT WRITTEN PERMISSION

PART NO.	POLARISED CCT NO.	NO. OF CKTS.	DIM. A	DIM. B (+0 −0.30) (+.0 −.012)	NO. PER TUBE
90148-3X01	2	3	(5.08) .200	(7.62) .300	72

NON-STANDARD PRODUCTS

90148-XXYY

- OPTION NUMBER (NOT RELATING TO CCT SIZE OR OTHERWISE)
- PLATING CODE (SEE SHEET 2)
- 3 = STRAIGHT PINS POLYESTER, POLARISED

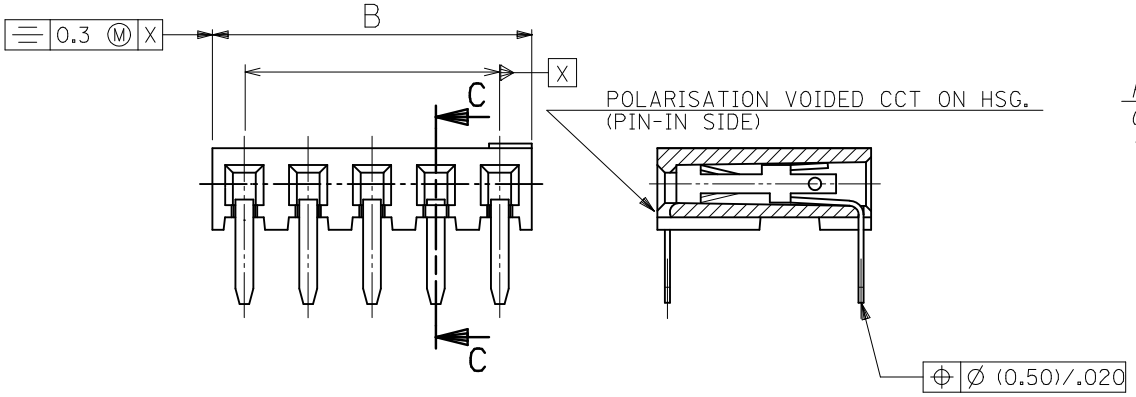

SECTION C-C SHOWING POLARISED CCT

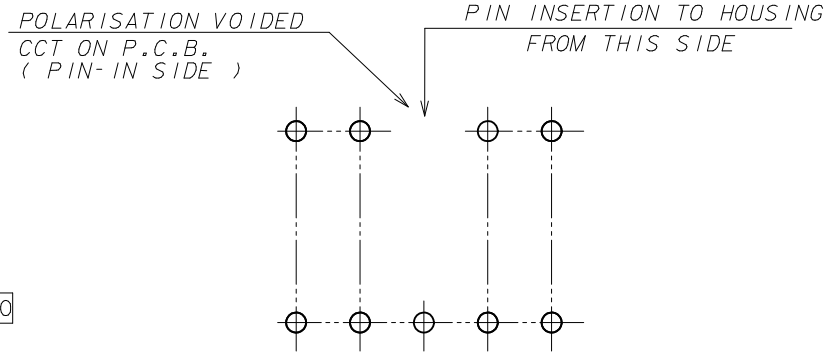

RECOMMENDED P.C. BOARD HOLE PATTERN FOR STRAIGHT PINS WITH POLARISATION

NOTES
1) SEE SHEET 1 FOR ALL UNSPECIFIED DIMENSIONS AND NOTES.
2) PARTS NOT STACKABLE.

UPDATE TOL.SYMMETRY	2010/05/26
EC NO: S2010-0968	2010/06/04
DRWN:SKANG	2010/06/05
CH'KD:ATSEE	
APPR:MLONG	
DESCRIPTION	
AK	REV

QUALITY SYMBOLS: F_A=0, F_C=0, F_P=0

GENERAL TOLERANCES (UNLESS SPECIFIED)	mm	INCH
4 PLACES	± ---	± ---
3 PLACES	± ---	± ---
2 PLACES	± 0.15	± ---
1 PLACE	± ---	± ---
ANGULAR ± 2 °		

DRAFT WHERE APPLICABLE MUST REMAIN WITHIN DIMENSIONS

DIMENSION STYLE	SCALE	DESIGN UNITS	
MM ONLY	NTS	METRIC	THIRD ANGLE PROJECTION

DRAWN BY	DATE
DB	1987/07/14
CHECKED BY	DATE
D.MORIARTY	2005/03/02
APPROVED BY	DATE
J.DENNEHY	2010/06/04

TITLE: C-GRID III SINGLE ROW HORIZONTAL P.C BOARD CONN.

molex MOLEX INCORPORATED

MATERIAL NO.: SEE TABLE

DOCUMENT NO.: SDA-90148

SHEET NO.: 3 OF 3

SIZE: A3

THIS DRAWING CONTAINS INFORMATION THAT IS PROPRIETARY TO MOLEX INCORPORATED AND SHOULD NOT BE USED WITHOUT WRITTEN PERMISSION

PART NO's - STRAIGHT PINS		PART NO.	NO OF CKTS.	DIM. A	DIM. B $(\pm^{0}_{-0.30})$ $\pm^{0}_{-.012}$	NO. PER TUBE
STANDARD	CUSTOMER SPECIFIC					
90148-1X02		90148-4X02	2	(2.54) .100	(5.08) .200	105
03		03	3	(5.08) .200	(7.62) .300	72
04		04	4	(7.62) .300	(10.16) .400	52
05		05	5	(10.16) .400	(12.70) .500	44
06	90148-9X06	06	6	(12.70) .500	(15.24) .600	36
07		07	7	(15.24) .600	(17.78) .700	30
08		08	8	(17.78) .700	(20.32) .800	26
09		09	9	(20.32) .800	(22.86) .900	24
10		10	10	(22.86) .900	(25.40) 1.000	22
11		11	11	(25.40) 1.000	(27.94) 1.100	18
12		12	12	(27.94) 1.100	(30.48) 1.200	18
13		13	13	———	———	16
14		14	14	(33.02) 1.300	(35.56) 1.400	14
15		15	15	(35.56) 1.400	(38.10) 1.500	14
16		16	16	———	———	13
17		17	17	———	———	12
18		18	18	(43.18) 1.700	(45.72) 1.800	12
19		19	19	(45.72) 1.800	(48.26) 1.900	12
20		20	20	(48.26) 1.900	(50.80) 2.000	11
21		21	21	———	———	10
22		22	22	———	———	10
23		23	23	———	———	10
24		24	24	———	———	9
25		25	25	(60.96) 2.400	(63.50) 2.500	8
26		26	26	(63.50) 2.500	(66.04) 2.600	8
27		27	27	———	———	8
28		28	28	———	———	7
29		29	29	———	———	7
30		30	30	(73.66) 2.900	(76.20) 3.000	7
31		31	31			7
90148-1X32		90148-4X32	32	(78.74) 3.100	(81.28) 3.200	6

PLATING VERSION A

PRE-PLATED HOT DIP TIN
1.0 TO 2.5 microns (.00004" TO .00010").

PLATING VERSION E

1.27 TO 1.78 microns (.00005" TO .00007") NICKEL
OVERALL, 0.38 TO 0.64 microns (.000015" TO .000025")
GOLD ON CONTACT AREA (OVER NICKEL).
3 TO 5 microns (.00012" TO .00020") TIN
ON SOLDER TAILS (OVER NICKEL).

PLATING VERSION F.

1.27 TO 1.78 microns (.00005" TO .00007") NICKEL
OVERALL, 0.76 TO 1.0 microns (.00003" TO .00004")
GOLD ON CONTACT AREA (OVER NICKEL).
3 TO 5 microns (.00012" TO .00020") TIN
ON SOLDER TAILS (OVER NICKEL).

90148-XXYY

- XX — INDICATES NO. OF CIRCUITS
- Y — PLATING CODE
  - 1 = VERSION A
  - 2 = VERSION E
  - 3 = VERSION F
- Y —
  - 1 = STRAIGHT PINS POLYESTER
  - 9 = STRAIGHT PINS POLYESTER
  - 4 = STRAIGHT PINS NYLON 46

REV	DESCRIPTION
AJ	ADD NEW P/N EC NO: E2007-0823 2007/03/29 DRWN:DBYRNES 2007/03/29 CHKD: 2007/04/04 APPR:EOMAHONY

QUALITY SYMBOLS
▼=0
(C)=0

GENERAL TOLERANCES (UNLESS SPECIFIED)

	mm	INCH
4 PLACES	± ---	± ---
3 PLACES	± ---	± ---
2 PLACES	± ---	± ---
1 PLACE	± ---	± ---
ANGULAR ±---°		

DRAFT WHERE APPLICABLE MUST REMAIN WITHIN DIMENSIONS

DIMENSION STYLE: MM ONLY
SCALE: ---
DESIGN UNITS: METRIC
THIRD ANGLE PROJECTION

DRAWN BY: DB DATE: 1987/07/14
CHECKED BY: D.MORIARTY DATE:
APPROVED BY: J.DENNEHY DATE:
MATERIAL NO.: SEE CHART

TITLE: C-GRID III SINGLE ROW HORIZONTAL P.C. BOARD CONNECTOR

molex MOLEX INCORPORATED

DOCUMENT NO.: SDA-90148
SHEET NO.: 2 OF 3
SIZE: A3

THIS DRAWING CONTAINS INFORMATION THAT IS PROPRIETARY TO MOLEX INCORPORATED AND SHOULD NOT BE USED WITHOUT WRITTEN PERMISSION