THIS DRAWING IS UNPUBLISHED. RELEASED FOR PUBLICATION AUG ,2006.
© COPYRIGHT 2009 BY TYCO ELECTRONICS CORPORATION. ALL RIGHTS RESERVED.

LOC	DIST
DW	—

REVISIONS

P	LTR	DESCRIPTION	DATE	DWN	APVD
	B	REVISED (ECR-11-013983)	03AUG10	JC	WK

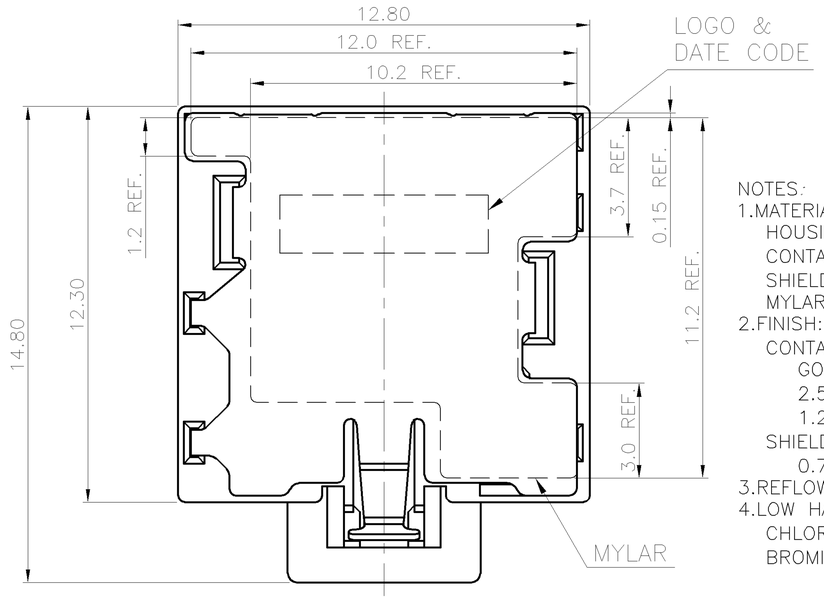

NOTES:
1.MATERIAL:
HOUSING: HTN WITH 30%GF, UL94V-0, BLACK COLOR.
CONTACT (#2,#3,#4,#5): COPPER ALLOY.
SHIELD(#1,#7): COPPER ALLOY.
MYLAR: KAPTON TAPE.
2.FINISH:
CONTACT (#2,#3,#4,#5):
GOLD FLASH PLATED ON CONTACT AREA.
2.54μm [100μ"] MIN. MATTE TIN PLATED ON SOLDERTAILS.
1.27μm [50μ"] MIN. NICKEL UNDER PLATED OVERALL.
SHIELD (#1,#7):
0.762μm [30μ"] MIN. NICKEL PLATED OVERALL.
3.REFLOW SOLDER CAPABLE TO 260°C PER TE SPEC 109-201, CONDITION B.
4.LOW HALOGEN SPECIFICATION:
CHLORINE(Cl): 900ppm MAX.
BROMINE(Br): 900ppm MAX.

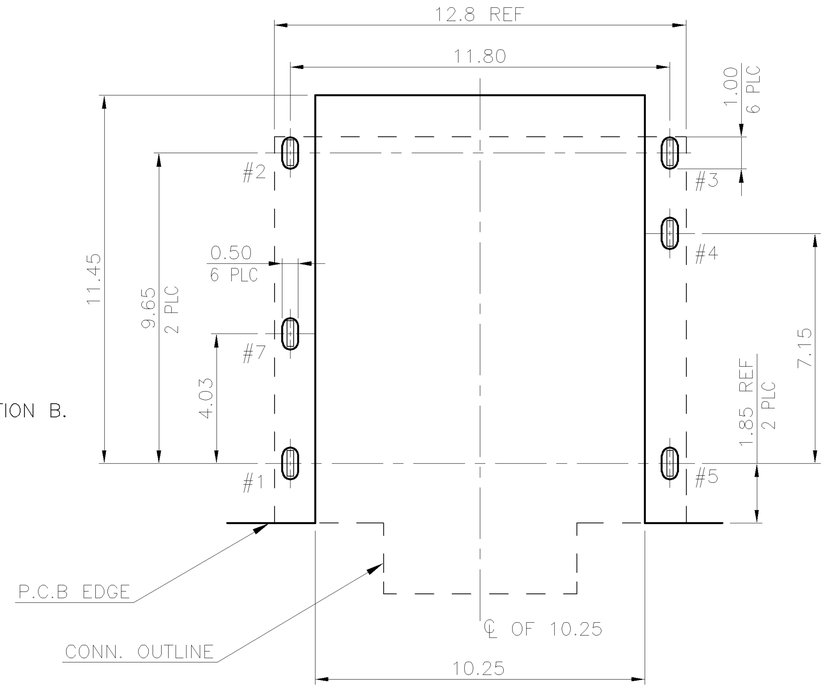

RECOMMEND P.C.B LAYOUT (THICKNESS=1.4mm)
(COMPONENT SIDE) TOLERANCE±0.05mm

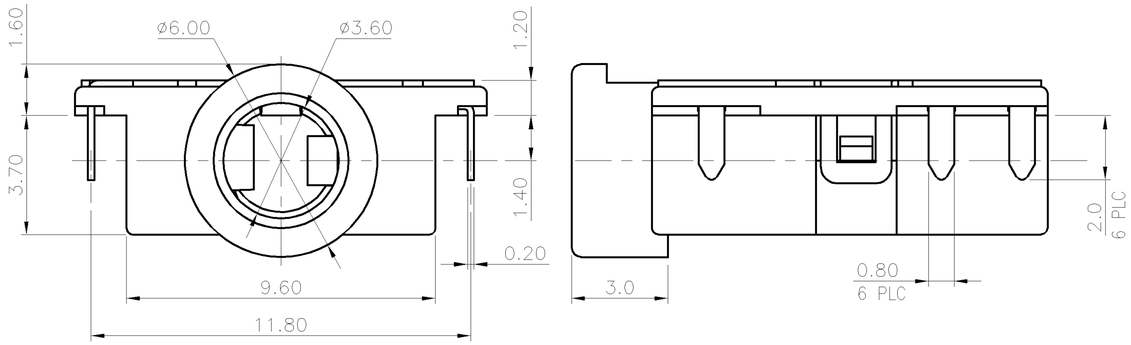

SCHEMATIC

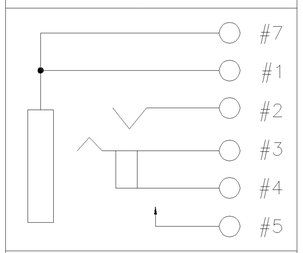

#4 AND #5 NORMAL OPEN

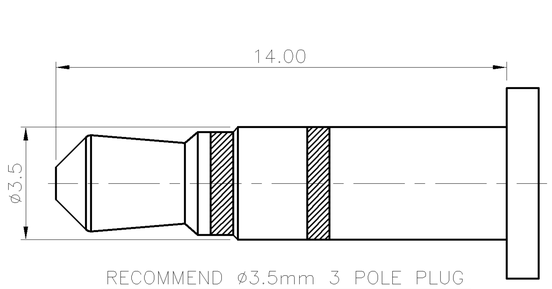

RECOMMEND ø3.5mm 3 POLE PLUG

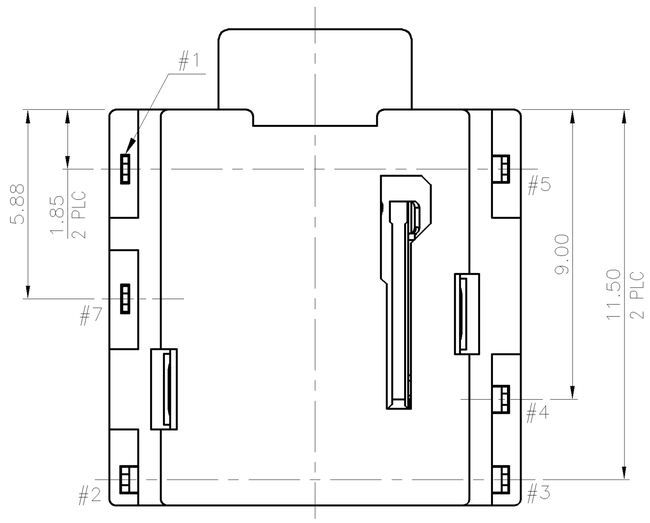

TAPE & REEL	2041280-1
PACKAGE	PART NUMBER

THIS DRAWING IS A CONTROLLED DOCUMENT.

DIMENSIONS: MM

TOLERANCES UNLESS OTHERWISE SPECIFIED:

0 PLC	± –
1 PLC	± 0.3
2 PLC	± 0.2
3 PLC	± 0.15
4 PLC	± –
ANGLES	± –

MATERIAL: SEE NOTE

FINISH: SEE NOTE

DWN	J. CHEN	07JUN2010
CHK	S. CHIEN	07JUN2010
APVD	W. KODAMA	07JUN2010

PRODUCT SPEC: 108-57835

APPLICATION SPEC: 501-57866

WEIGHT: 0.889 GRAMS

CUSTOMER DRAWING

TE Connectivity

NAME: ø3.50MM AUDIO JACK CONNECTOR DIP, OFFSET, NORMAL OPEN TYPE

SIZE	CAGE CODE	DRAWING NO	RESTRICTED TO
A3	00779	C-2041280	—

SCALE: — SHEET 1 OF 2 REV B

OBSOLETE
NOT the LATEST REVISION

THIS DRAWING IS UNPUBLISHED. RELEASED FOR PUBLICATION AUG ,2006.
© COPYRIGHT 2009 BY TYCO ELECTRONICS CORPORATION. ALL RIGHTS RESERVED.

LOC	DIST
DW	—

REVISIONS

P	LTR	DESCRIPTION	DATE	DWN	APVD
		SEE SHEET 1			

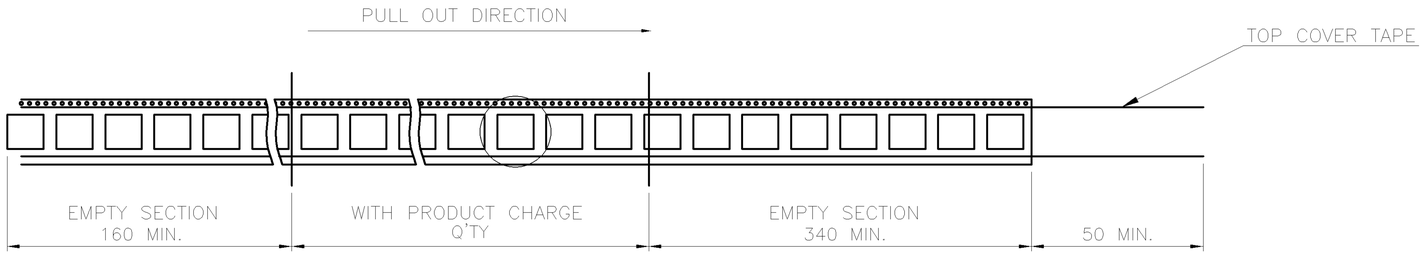

NOTES:
1.PEELING RESISTANCE: 10gf~130gf (for 12mm~56mm)
2.PEELING SPEED: 300MM/MIN.

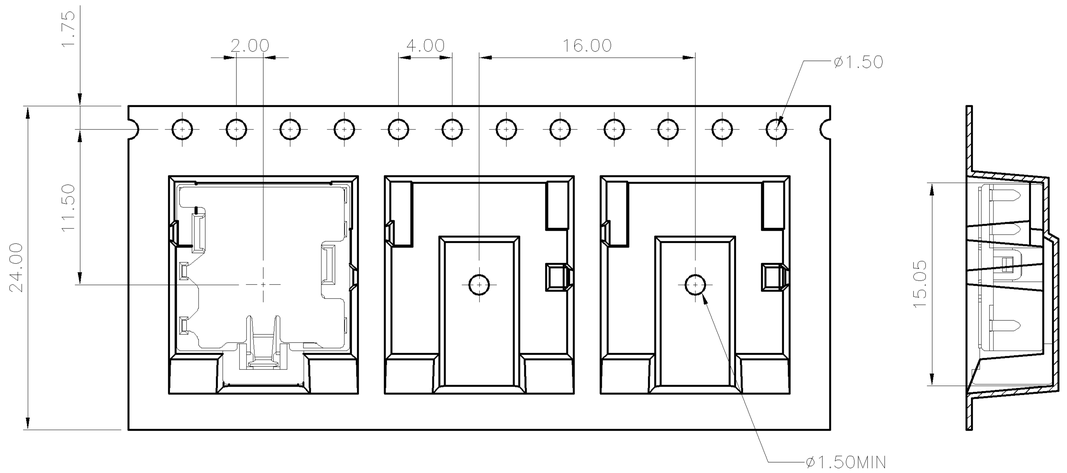

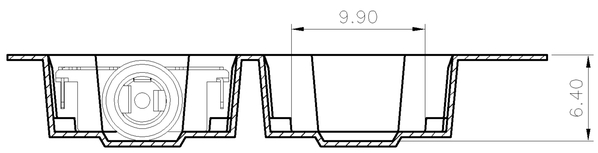

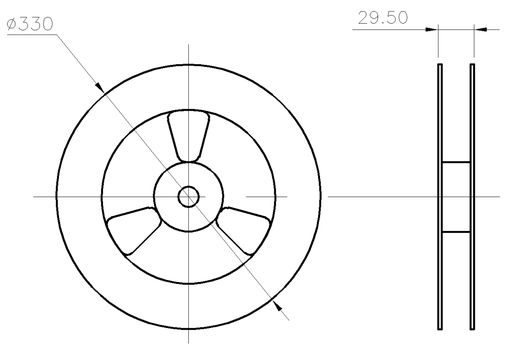

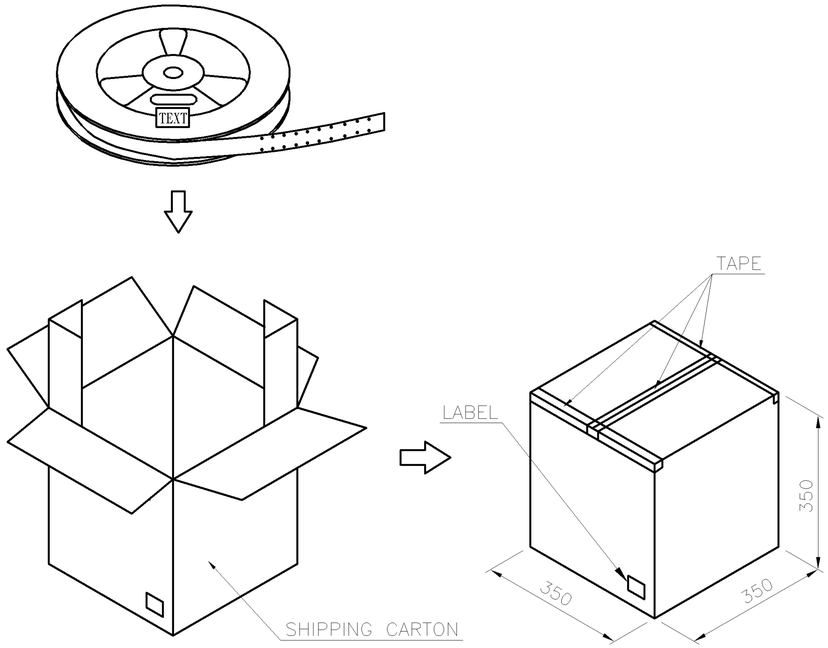

GROSS WEIGHT	NET WEIGHT	PCS/ REEL	REELS/ CARTON	QUANTITY (PCS)	PART NUMBER
10.41 KG	5.87 KG	600	11	6600	2041280-1

THIS DRAWING IS A CONTROLLED DOCUMENT.

DIMENSIONS: MM

TOLERANCES UNLESS OTHERWISE SPECIFIED:
0 PLC ±
1 PLC ±
2 PLC ±
3 PLC ±
4 PLC ±
ANGLES ±

MATERIAL —

FINISH —

DWN
CHK
APVD
PRODUCT SPEC —
APPLICATION SPEC —
WEIGHT — GRAMS

TE Connectivity

NAME
ø3.50MM AUDIO JACK CONNECTOR
DIP, OFFSET, NORMAL OPEN TYPE

SIZE	CAGE CODE	DRAWING NO	RESTRICTED TO
A3	00779	C-2041280	—

CUSTOMER DRAWING | SCALE — | SHEET 2 OF 2 | REV B