M 21EN381

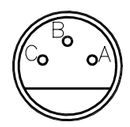

CONNECTOR DETAIL

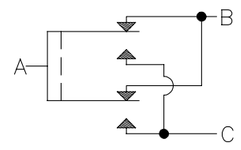

CIRCUIT DIAGRAM

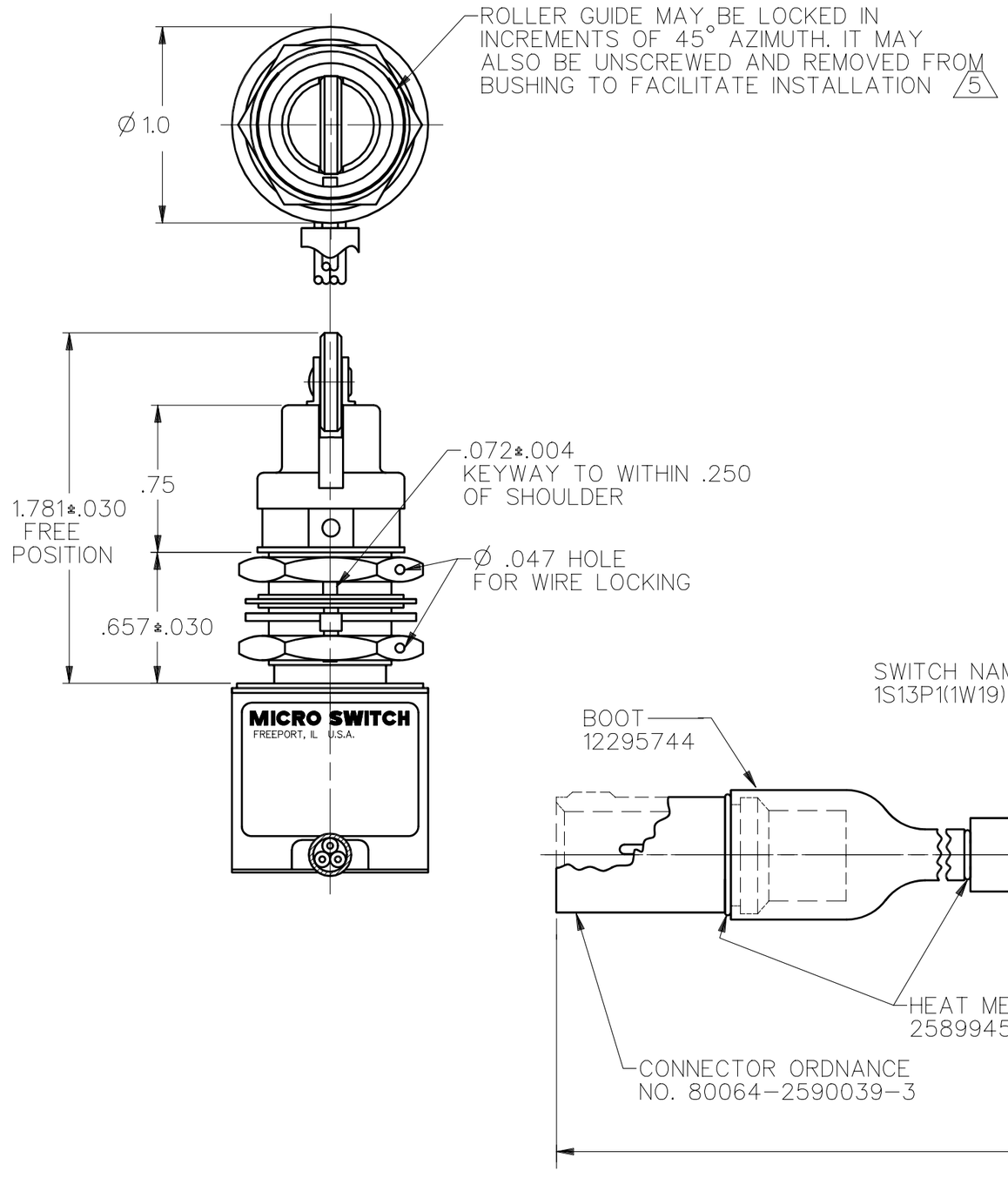

NOTES

1 – CORROSION RESISTANT STEEL ENCLOSURE
2 – SWITCH SEALED PER MIL-S-8805 SYMBOL 4
3 – CIRCUIT DIAGRAM AND CATALOG LISTING ARE SHOWN ON NAMEPLATE
4 – COINCIDENCE OF OPERATING AND RELEASING POINTS: .010 OF PLUNGER TRAVEL
5 TO ADJUST ROLLER DIRECTION, REMOVE ROLLER GUIDE LOCK RING, SCREW ROLLER GUIDE DOWN AS FAR AS POSSIBLE, THEN UNSCREW TO DESIRED DIRECTION. SECURE BY REPLACING ROLLER GUIDE LOCK RING
6 HARDWARE MAY BE PACKAGED UNASSEMBLED PER MIL-S-8805
7 NAMEPLATE WITH THE FOLLOWING INFORMATION: 19207-12328970 MFR-80212

CHARACTERISTICS	
OPERATING FORCE	6-12 LBS
FULL OVERTRAVEL FORCE	30 LBS MAX
RELEASE FORCE	4 LBS MIN
PRETRAVEL	.040 MAX
DIFFERENTIAL TRAVEL	.020 MAX
OVERTRAVEL	.250 MIN

ELECTRICAL DATA		
	CONTACT ARRANGEMENT	
	SPDT	
	28 VDC	
LOAD	SEA LEVEL	50,000 FT
RES	4	4
IND	2	2
MOTOR	4	

MASTER REDUCED
ANSI Y14.5M-1982 APPLIES

THIS DRAWING COVERS A PROPRIETARY ITEM AND IS THE PROPERTY OF MICRO SWITCH. A DIVISION OF HONEYWELL. THIS DRAWING IS NOT TO BE COPIED OR USED WITHOUT THE APPROVAL OF MICRO SWITCH.

MICRO SWITCH a Honeywell Division
FED. MFG. CODE 91929

SWITCH – ENCLOSED

CATALOG LISTING 21EN381
U.S.ARMY DRAWING 19207-12328970

THIRD ANGLE PROJECTION
SCALE 1.5 : 1
DO NOT SCALE PRINT

UNLESS OTHERWISE SPECIFIED TOLERANCES ARE

ONE PLACE	(.0)	±.030
TWO PLACES	(.00)	±.015
THREE PLACES	(.000)	±.005
ANGLES		±

WEIGHT

DRAWING NUMBER 21EN381 REPLACES
M PAGE 1 OF 1 RELEASE NO. PR-14256
ISSUE 9 CHECK
REVISIONS
A CO 81262 LJK 15 OCT 95
B CO 82118 JJA 16 JAN 96
CHECK
CHECK JAF 24OCT95
CHECK LJK 16OCT95
DRAWN DDM/CAD