THIS DRAWING IS UNPUBLISHED. RELEASED FOR PUBLICATION -.- .
© COPYRIGHT - BY TYCO ELECTRONICS CORPORATION. ALL RIGHTS RESERVED.

LOC	DIST
AJ	16

REVISIONS

P	LTR	DESCRIPTION	DATE	DWN	APVD
	O	REV PER EC-0S14-0496-04	01FEB2005	GA	JL

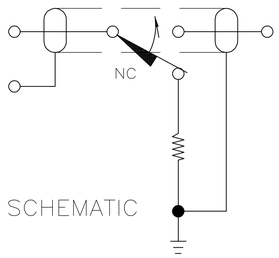

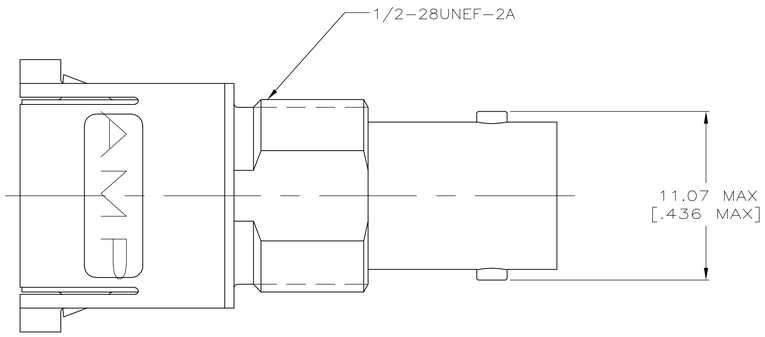

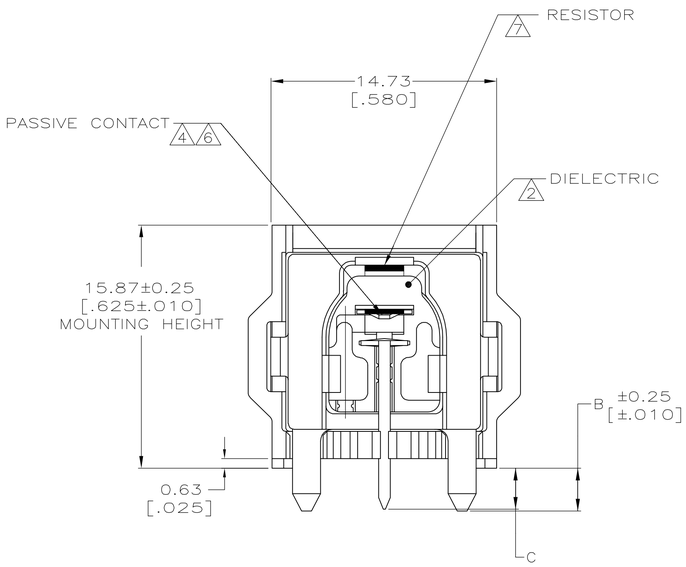

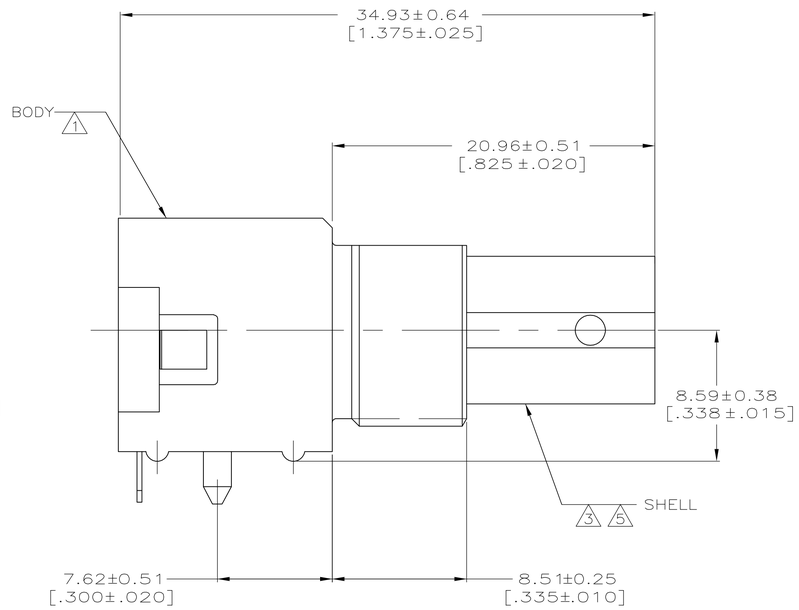

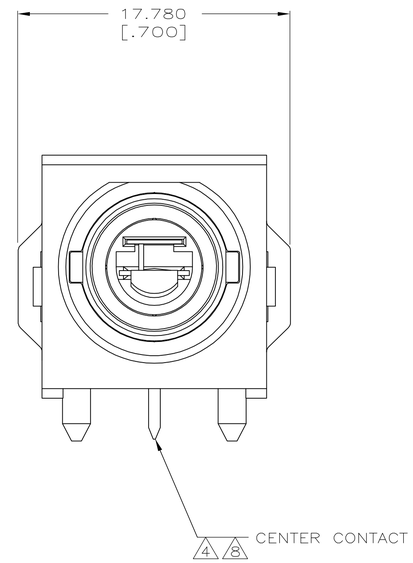

1. POLYESTER,PBT,BLACK,PER MIL-M-24519
2. POLYESTER,PBT,NATURAL,PER MIL-M-24519
3. ZINC PER QQ-Z-363
4. PHOSPHOR BRONZE PER QQ-B-750
5. TIN PLATE PER ASTM-B-545
6. GOLD PL PER MIL-G-45204
7. RESISTOR CHARACTERISTICS:
   A. OHMS (SEE TABLE)
   B. 5% TOLERANCE
   C. 400mW POWER RATING
8. SELECTIVELY GOLD PLATED ON INTERFACE AREA PER: MIL-G-45204, .000030 THK,TIN PLATE ON SOLDER TAIL PER: ASTM-B-545, ALL OVER NICKEL PL PER: QQ-N-290
9. BOARD THICKNESS: .062 MAX

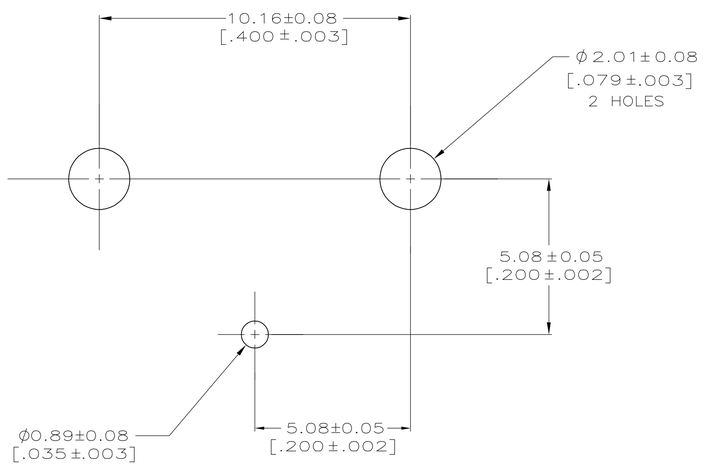

P.C.B. CONFIGURATION
SCALE=10:1

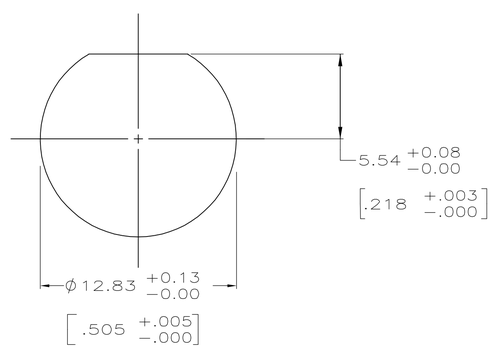

RECOMMENDED
PANEL CUTOUT

2.67±0.38 [.105±.015]	2.79 [.110]	75 OHMS	5414367-2
C	B	RESISTOR 7	PART NUMBER

THIS DRAWING IS A CONTROLLED DOCUMENT.

DIMENSIONS: mm [INCHES]

TOLERANCES UNLESS OTHERWISE SPECIFIED:
0 PLC ± -
1 PLC ± -
2 PLC ± -
3 PLC ± 0.20 [.008]
4 PLC ± -
ANGLES ± -

MATERIAL 1 2 3 4
FINISH 5 6 8

DWN G. ATTADIA - DOCK5 01FEB2005
CHK J. HAVENER 01FEB2005
APVD J. LIPPERT 01FEB2005
PRODUCT SPEC —
APPLICATION SPEC —
WEIGHT —

tyco Electronics
Tyco Electronics Corporation
Harrisburg, Pa 17105-3608

NAME JACK,PCB,RIGHT ANGLE, SELF-TERMINATING BNC —

SIZE	CAGE CODE	DRAWING NO	RESTRICTED TO
A1	00779	C-5414367	—

CUSTOMER DRAWING SCALE 5:1 SHEET 1 OF 1 REV O