THIS DRAWING IS UNPUBLISHED. RELEASED FOR PUBLICATION -,- .
© COPYRIGHT - By - ALL RIGHTS RESERVED.

LOC	DIST
G	14

REVISIONS

P	LTR	DESCRIPTION	DATE	DWN	APVD
	S1	REVISED PER ECO-11-004587	11MAR11	RK	HMR

AMP WIRE RANGE	UL Listed FILE E13288	CSA LR7189 Certified
22-16 AWG SOLID OR STRANDED	22-16 AWG SOLID OR STRANDED	22-16 AWG SOLID OR STRANDED

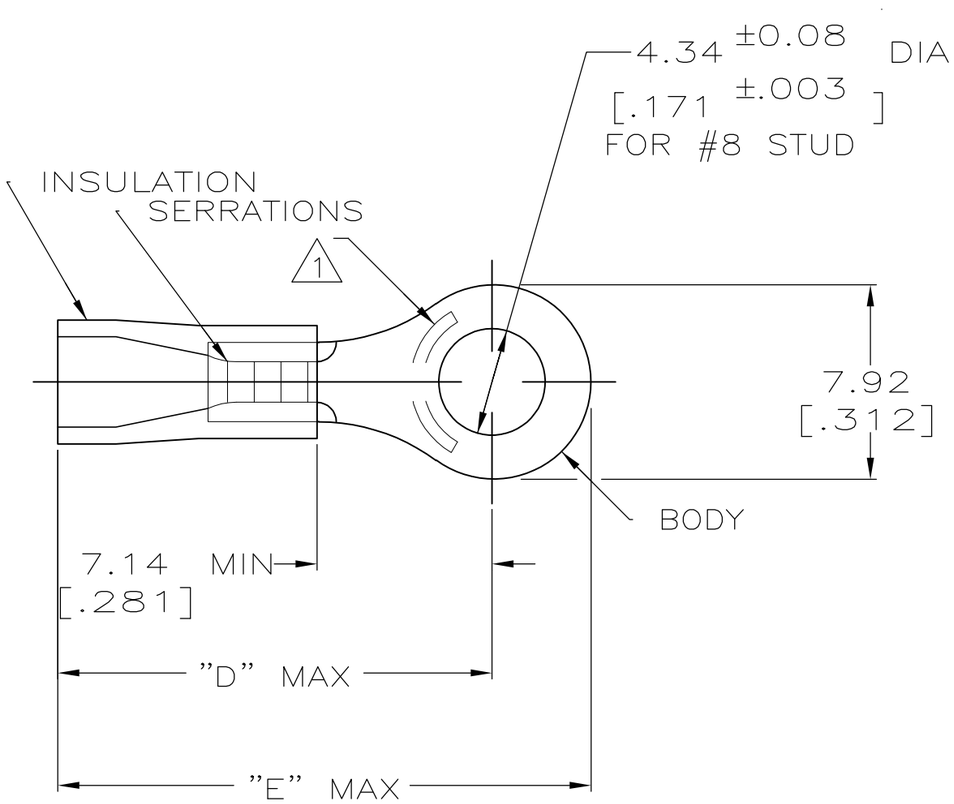

1 STAMP AMP 22-18* 1-2 APPROX AS SHOWN 22-16 TERMINALS ARE STAMPED 22-18 IN ACCORDANCE WITH MILITARY SPEC MIL-T-7928 COMMERCIAL WIRE RANGE IS 22-16

2 TONGUE MATERIAL THK: $0.79^{\pm 0.05}$ [$.031^{\pm .002}$]

3 MATERIAL: BODY - CU PER ASTM B152
SLEEVE - PVC, COLOR - RED

"E"	"D"	WIRE INSULATION DIA	QTY	PACKAGE TYPE	PART NUMBER
21.74[.856]	17.70[.697]	2.67-3.56[.105-.140]	100	LOOSE PC, BOX	8-34148-1
22.99[.905]	18.95[.746]	2.67-5.08[.105-.200]	5000	ON TAPE, REEL	2-34148-4
21.74 [.856]	17.70 [.697]	2.67-3.56 [.105-.140]	5000	ON TAPE, REEL	2-34148-1
			1000	LOOSE PIECE	34148

AMP INCORPORATED
CUSTOMER SERVICE SYSTEMS

FOR ADDITIONAL PRODUCT INFORMATION OR COPIES OF DRAWINGS AND TECHNICAL DOCUMENTS	PRODUCT INFORMATION CENTER 1-800-522-6752
FOR APPLICATION TOOLING INFORMATION	TOOLING ASSISTANCE CENTER 1-800-722-1111
FOR ORDER ENTRY	1-800-526-5142

THIS DRAWING IS A CONTROLLED DOCUMENT FOR AMP INCORPORATED. IT IS SUBJECT TO CHANGE AND THE CONTROLLING ENGINEERING ORGANIZATION SHOULD BE CONTACTED FOR THE LATEST REVISION.

MAX RECOMMENDED OPERATING TEMPERATURE: 105°C [221°F]

VOLTAGE RATING: 600V MAX (1000V FIXTURE OR SIGN)

CIRCULAR MIL AREA: 0.26-1.65mm² [509-3260] SOLID OR STRANDED

THIS DRAWING IS A CONTROLLED DOCUMENT.

DIMENSIONS: MM [INCHES]

TOLERANCES UNLESS OTHERWISE SPECIFIED:
0 PLC ±-
1 PLC ±-
2 PLC ± 0.20[.008]
3 PLC ±-
4 PLC ±-
ANGLES ±-

MATERIAL 3

FINISH TIN PER ASTM B545

DWN	DK SCHRUM	08/06/92
CHK	RE HERSEY	11/10/92
APVD	M BARNABA	11/10/92
PRODUCT SPEC	UL 486A	
APPLICATION SPEC	—	
WEIGHT	—	

TE Connectivity

NAME: TERMINAL, RING TONGUE, PLASTI-GRIP WIRE SIZE, 22-16 AWG

SIZE	CAGE CODE	DRAWING NO	RESTRICTED TO
A3	00779	C-34148	—

CUSTOMER DRAWING | SCALE 4:1 | SHEET 1 OF 1 | REV S1

1470-19 (3/11)