LTR	EN	DESCRIPTION	APPR	BY	DATE
A	–	INITIAL RELEASE	MT	DC	12–11–08

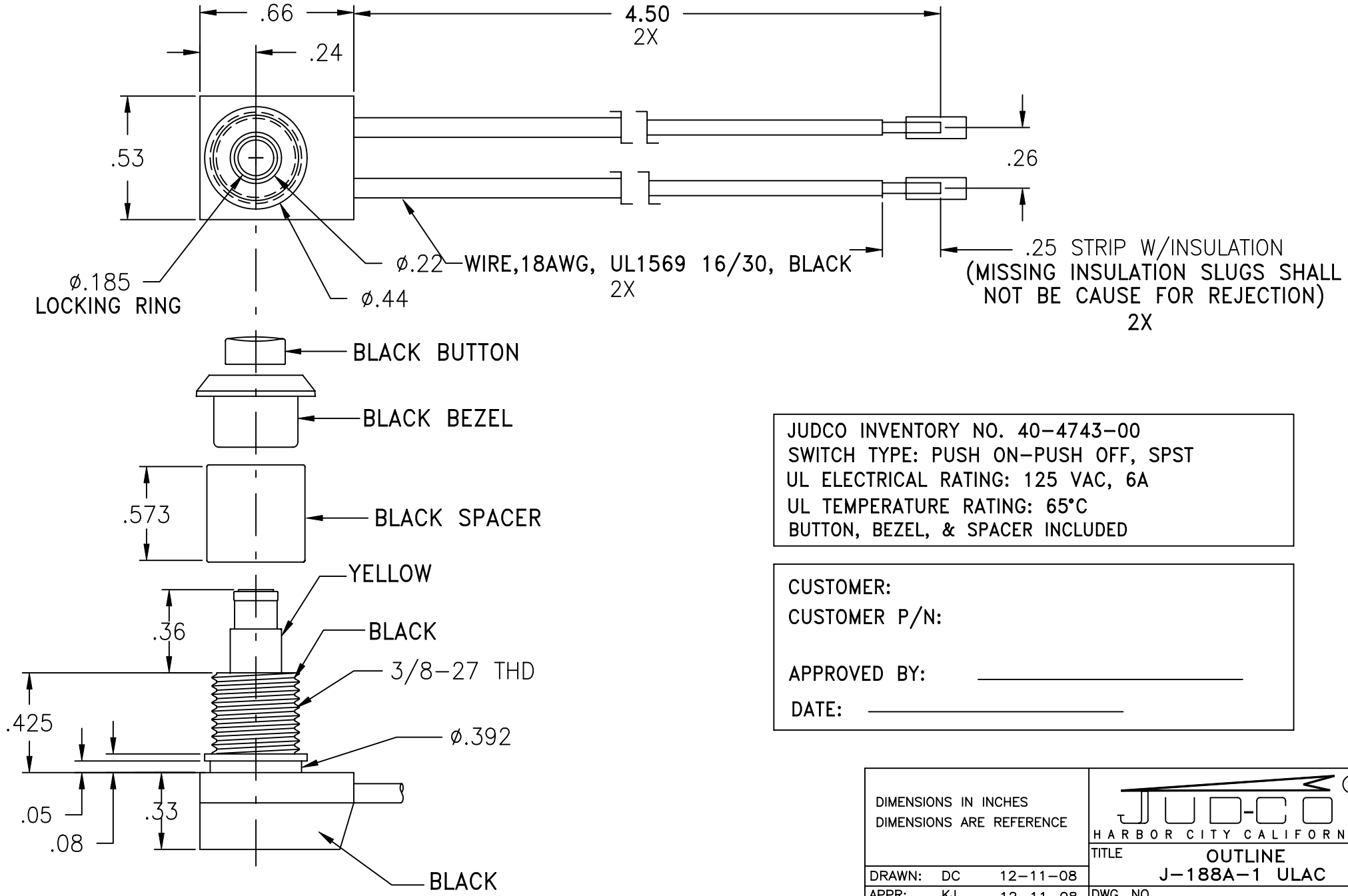

JUDCO INVENTORY NO. 40–4743–00
SWITCH TYPE: PUSH ON–PUSH OFF, SPST
UL ELECTRICAL RATING: 125 VAC, 6A
UL TEMPERATURE RATING: 65°C
BUTTON, BEZEL, & SPACER INCLUDED

CUSTOMER:
CUSTOMER P/N:

APPROVED BY: _____

DATE: _____

DIMENSIONS IN INCHES
DIMENSIONS ARE REFERENCE

DRAWN:	DC	12–11–08
APPR:	KJ	12–11–08
ENGR:	IS	12–11–08

1415U1451A.DWG

JUDCO ®
HARBOR CITY CALIFORNIA

TITLE OUTLINE
J–188A–1 ULAC

DWG. NO. 1415–1451

SHEET 1 OF 1

This document embodies a product, component, and/or design proprietary to JUDCO MANUFACTURING INC., and which is protected either as a trade secret, by U.S. Patent, or by copyright. It may not be used in any way without written express consent of JUDCO MANUFACTURING INC.