Surface Mount Multilayer Ceramic Capacitors (SMD MLCCs) for High Power Applications

CBR Series, C0G Dielectric, Ultra High Q, Low ESR, 6.3 – 500 VDC (RF & Microwave)

Electronic Components KEMET CHARGED.

Overview

KEMET's CBR Series surface mount multilayer ceramic capacitors (MLCCs) in C0G dielectric feature a robust and exceptionally stable copper electrode dielectric system that offers excellent low loss performance (High Q). These devices provide extremely low ESR and high self-resonance characteristics, and are well-suited for resonant circuit applications or those where Q and stability of capacitance characteristics are required. CBR Series capacitors exhibit no change in capacitance with respect to time and voltage, and boast a negligible change in capacitance with reference to ambient temperature. Capacitance change is limited to ±30 ppm/ºC from -55°C to +125°C.

CBR Series devices are suitable for many circuit applications including RF power amplifiers, mixers, oscillators, low noise amplifiers, filter networks, antenna tuning, timing circuits, delay lines, and MRI imaging coils.

HiQ-CBR
RF & MICROWAVE

Benefits

- -55°C to +125°C operating temperature range
- Ultra high Q
- Base metal electrode (BME) dielectric system
- Pb-Free and RoHS Compliant
- 0201, 0402, 0603, and 0805 case sizes (inches)
- DC voltage ratings of 6.3 V, 10 V, 25 V, 50 V, 100 V, 250 V and 500 V
- Capacitance offerings ranging from 0.1 pF up to 100 pF
- Available capacitance tolerances of ±0.05 pF, ±0.1 pF, ±0.25 pF, ±0.5 pF, ±1%, ±2%, ±5%, and ±10%

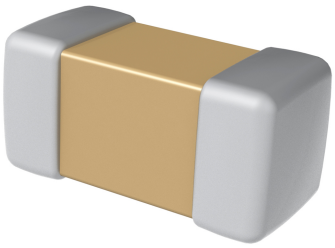

Click image above for interactive 3D content

Open PDF in Adobe Reader for full functionality

Ordering Information

CBR	02	C	330	F	9	G	A	C	
Series	Case Size (L"x W")	Specification/ Series	Capacitance Code (pF)	Capacitance Tolerance	Voltage	Dielectric	Termination Style	Termination Finish	Packaging/Grade (C-Spec)[1]
CBR	02 = 0201 04 = 0402 06 = 0603 08 = 0805	C = Standard	2 significant digits + number of zeros Use 9 for 1.0 – 9.9 pF Use 8 for 0.1 – .99 pF e.g., 2.2 pF = 229 e.g., 0.5 pF = 508	A = ±0.05 pF B = ±0.1 pF C = ±0.25 pF D = ±0.5 pF F = ±1% G = ±2% J = ±5%	9 = 6.3 V 8 = 10 V 3 = 25 V 5 = 50 V 1 = 100 V A = 250 V C = 500 V	G = C0G	A = N/A	C = 100% Matte Sn	Blank = 7" Reel Unmarked

[1] *When ordering CBR series devices, a "suffix" or "C-Spec" is not required to indicate a 7" reel packaging option. CBR devices are only available and shipped on 7" reels (paper tape). Bulk bag and cassette packaging options are not available. Please contact KEMET if you have a specific, non-standard packaging requirement.*

© KEMET Electronics Corporation • P.O. Box 5928 • Greenville, SC 29606 (864) 963-6300 • www.kemet.com

Dimensions – Millimeters (Inches)

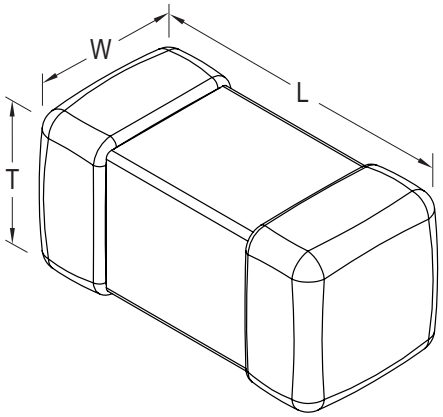

Case Size (in.)	Case Size (mm)	L Length	W Width	T Thickness	B Bandwidth	Mounting Technique
0201	0603	0.60 ± 0.03 (0.024 ± 0.001)	0.30 ± 0.03 (0.012 ± 0.001)	0.30 ± 0.03 (0.012 ± 0.001)	0.15 ± 0.05 (0.006 ± 0.002)	Solder Reflow Only
0402	1005	1.00 ± 0.05 (0.040 ± 0.002)	0.50 ± 0.05 (0.020 ± 0.002)	0.50 ± 0.05 (0.020 ± 0.002)	0.25 + 0.05 / -0.10 (0.010 + 0.002 / -0.004)	
0603	1608	1.60 ± 0.10 (0.063 ± 0.004)	0.80 ± 0.10 (0.031 ± 0.004)	0.80 ± 0.07 (0.031 ± 0.003)	0.40 ± 0.15 (0.016 ± 0.006)	Solder Wave or Solder Reflow
0805	2012	2.00 ± 0.20 (0.079 ± 0.008)	1.25 ± 0.20 (0.049 ± 0.008)	0.85 ± 0.10 (0.031 ± 0.004)	0.50 ± 0.20 (0.020 ± 0.008)	

Benefits

- No piezoelectric noise
- Low ESR
- High thermal stability
- No capacitance change with respect to applied rated DC voltage
- Negligible capacitance change with respect to temperature
- No capacitance decay with time
- Non-polar device, minimizing installation concerns
- 100% pure matte tin-plated termination finish allowing for excellent solderability

Applications

Typical applications include critical timing, tuning, bypass, coupling, feedback, filtering, impedance matching and DC blocking.

Field applications include wireless and cellular base stations, wireless LAN, subscriber-based wireless services, wireless broadcast equipment, satellite communications, RF power amplifier (PA) modules, filters, voltage-controlled oscillators (VCOs), PAs, matching networks, RF modules, and medical electronics.

Qualification

RF and microwave products are subject to internal qualification. Details regarding test methods and conditions are referenced in Table 4, Performance & Reliability.

Electrical Parameters/Characteristics

Item	Parameters/Characteristics
Operating Temperature Range	-55°C to +125°C
Capacitance Change with Reference to +25°C and 0 VDC Applied (TCC)	0 ±30 ppm/°C (0 ±60 ppm/°C for 0201 case size product ≥ 22 pF)
Aging Rate (Maximum % Capacitance Loss/Decade Hour)	0%
Dielectric Withstanding Voltage (DWV)	See Dielectric Withstanding Voltage Table (5 ±1 seconds and charge/discharge not exceeding 50 mA)
Quality Factor (Q)	≥1,000 for capacitance values ≥30 pF ≥400 +20C for capacitance values < 30 pF
Insulation Resistance (IR) Limit @ 25°C	10GΩ minimum (rated voltage applied for 120 ±5 seconds)

Capacitance and Quality Factor (Q) measured at 25ºC and 30 – 70% relative humidity under the following conditions:

1 MHz ±100 kHz and 1.0 ±0.2 Vrms if capacitance ≤ 1,000 pF

1 kHz ±100 Hz and 1.0 ±0.2 Vrms if capacitance > 1,000 pF

Note: When measuring capacitance it is important to ensure the set voltage level is held constant. The HP4284 & Agilent E4980 have a feature known as Automatic Level Control (ALC). The ALC feature should be switched to "ON."

Dielectric Withstanding Voltage Table

Rated Voltage (VDC)	≤100 V	250 V	500 V
DWV	250%	200%	150%

Environmental Compliance

Pb-Free and RoHS Compliant.

RoHS Compliant

Electrical Characteristics

SRF (MHz) vs. Cap (pF)

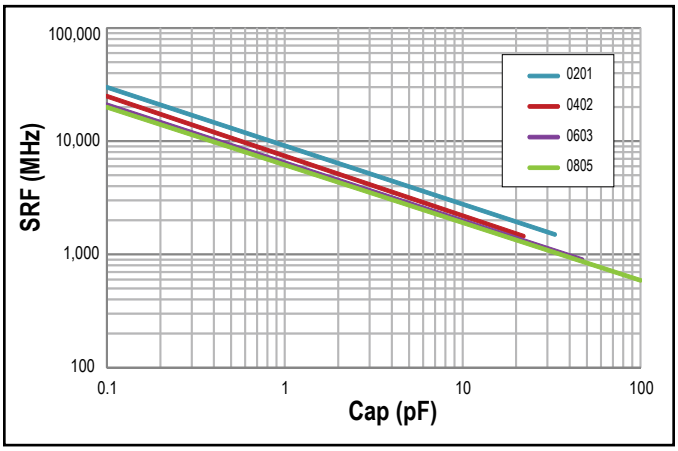

Electrical Characteristics cont'd

ESR vs. Frequency 0402

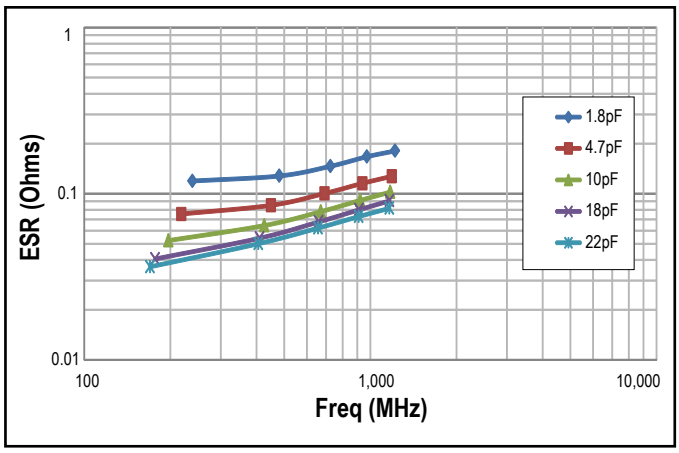

Q vs. Frequency 0402

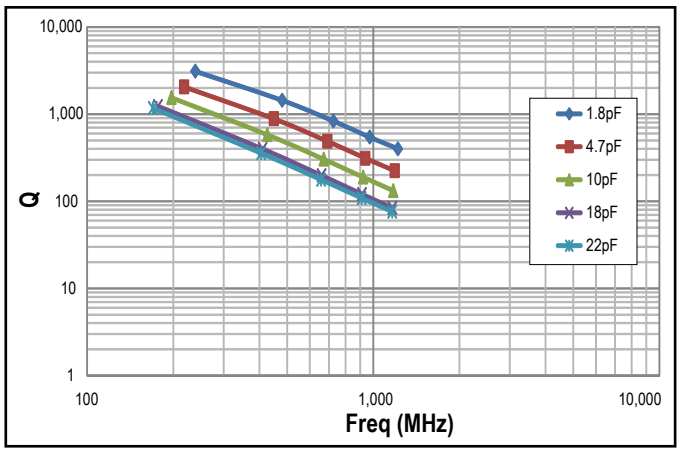

ESR vs. Frequency 0603

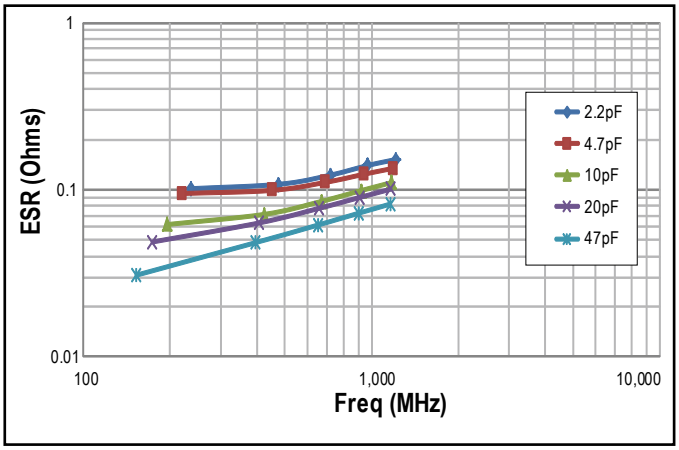

Q vs. Frequency 0603

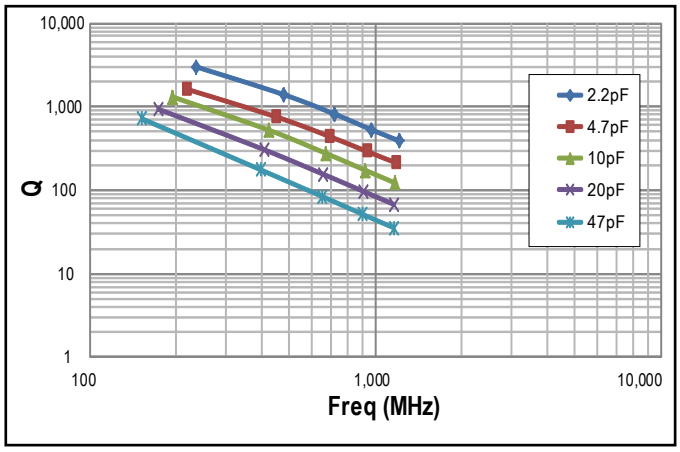

ESR vs. Frequency 0805

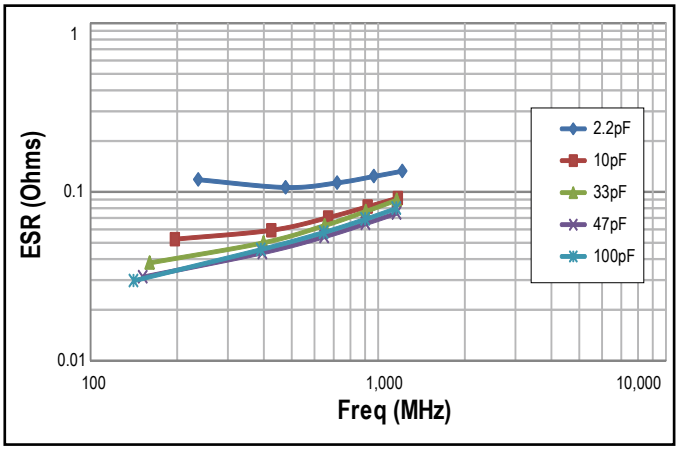

Q vs. Frequency 0805

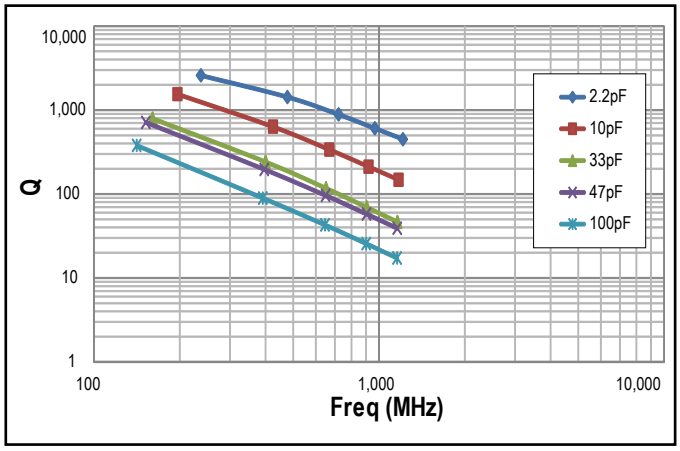

Table 1 – CBR Series, Capacitance Range Waterfall

Case Size – Inches (mm)		0201 (0603)				0402 (1005)			0603 (1608)			0805 (2012)			
Length	mm (Inches)	0.60 ± 0.03 (0.024 ± 0.001)				1.00 ± 0.05 (0.040 ± 0.002)			1.60 ± 0.10 (0.063 ± 0.004)			2.00 ± 0.20 (0.079 ± 0.008)			
Width	mm (Inches)	0.30 ± 0.03 (0.012 ± 0.001)				0.50 ± 0.05 (0.020 ± 0.002)			0.80 ± 0.10 (0.031 ± 0.004)			1.25 ± 0.20 (0.049 ± 0.008)			
Thickness	mm (Inches)	0.30 ± 0.03 (0.012 ± 0.001)				0.50 ± 0.05 (0.020 ± 0.002)			0.80 ± 0.07 (0.031 ± 0.003)			0.85 ± 0.10 (0.031 ± 0.004)			
Bandwidth	mm (Inches)	0.15 ± 0.05 (0.006 ± 0.002)				0.25 + 0.05 / -0.10 (0.010 + 0.002 / -0.004)			0.40 ± 0.15 (0.016 ± 0.006)			0.50 ± 0.20 (0.020 ± 0.008)			
Rated Voltage (VDC)		**6.3**	**10**	**25**	**50**	**25**	**50**	**100**	**50**	**100**	**250**	**50**	**100**	**250**	**500**
Voltage Code		**9**	**8**	**3**	**5**	**3**	**5**	**1**	**5**	**1**	**A**	**5**	**1**	**A**	**C**
Capacitance	**Capacitance Tolerance**	**Capacitance Code (Available Capacitance)**													
0.1 pF	A = ±0.05 pF B = ±0.1 pF	108*	108*	108*	108*	108	108	108*							
0.2 pF		208	208	208	208	208	208	208							
0.3 pF		308	308	308	308	308	308	308	308	308	308	308	308	308	308
0.4 pF		408	408	408	408	408	408	408	408	408	408	408	408	408	408
0.5 pF	A = ±0.05 pF B = ±0.1 pF C = ±0.25 pF	508	508	508	508	508	508	508	508	508	508	508	508	508	508
0.6 pF		608	608	608	608	608	608	608	608	608	608	608	608	608	608
0.7 pF		708	708	708	708	708	708	708	708	708	708	708	708	708	708
0.8 pF		808	808	808	808	808	808	808	808	808	808	808	808	808	808
0.9 pF		908	908	908	908	908	908	908	908	908	908	908	908	908	908
1.0 pF		109	109	109	109	109	109	109	109	109	109	109	109	109	109
1.1 pF		119	119	119	119	119	119	119	119	119	119	119	119	119	119
1.2 pF		129	129	129	129	129	129	129	129	129	129	129	129	129	129
1.3 pF		139	139	139	139	139	139	139	139	139	139	139	139	139	139
1.4 pF		149	149	149	149	149	149	149	149	149	149	149	149	149	149
1.5 pF		159	159	159	159	159	159	159	159	159	159	159	159	159	159
1.6 pF		169	169	169	169	169	169	169	169	169	169	169	169	169	169
1.7 pF		179	179	179	179	179	179	179	179	179	179	179	179	179	179
1.8 pF		189	189	189	189	189	189	189	189	189	189	189	189	189	189
1.9 pF		199	199	199	199	199	199	199	199	199	199	199	199	199	199
2.0 pF		209	209	209	209	209	209	209	209	209	209	209	209	209	209
2.1 pF		219	219	219	219	219	219	219	219	219	219	219	219	219	219
2.2 pF		229	229	229	229	229	229	229	229	229	229	229	229	229	229
2.3 pF		239	239	239	239	239	239	239	239	239	239	239	239	239	239
2.4 pF		249	249	249	249	249	249	249	249	249	249	249	249	249	249
2.5 pF		259	259	259	259	259	259	259	259	259	259	259	259	259	259
2.6 pF		269	269	269	269	269	269	269	269	269	269	269	269	269	269
2.7 pF		279	279	279	279	279	279	279	279	279	279	279	279	279	279
2.8 pF		289	289	289	289	289	289	289	289	289	289	289	289	289	289
2.9 pF		299	299	299	299	299	299	299	299	299	299	299	299	299	299
3.0 pF		309	309	309	309	309	309	309	309	309	309	309	309	309	309
3.1 pF		319	319	319	319	319	319	319	319	319	319	319	319	319	319
3.2 pF		329	329	329	329	329	329	329	329	329	329	329	329	329	329
3.3 pF		339	339	339	339	339	339	339	339	339	339	339	339	339	339
3.4 pF		349	349	349	349	349	349	349	349	349	349	349	349	349	349
3.5 pF		359	359	359	359	359	359	359	359	359	359	359	359	359	359
3.6 pF		369	369	369	369	369	369	369	369	369	369	369	369	369	369
3.7 pF		379	379	379	379	379	379	379	379	379	379	379	379	379	379
3.8 pF		389	389	389	389	389	389	389	389	389	389	389	389	389	389
3.9 pF		399	399	399	399	399	399	399	399	399	399	399	399	399	399
4.0 pF		409	409	409	409	409	409	409	409	409	409	409	409	409	409
4.1 pF		419	419	419	419	419	419	419	419	419	419	419	419	419	419
4.2 pF		429	429	429	429	429	429	429	429	429	429	429	429	429	429
4.3 pF		439	439	439	439	439	439	439	439	439	439	439	439	439	439
4.4 pF		449	449	449	449	449	449	449	449	449	449	449	449	449	449
4.5 pF		459	459	459	459	459	459	459	459	459	459	459	459	459	459
4.6 pF		469	469	469	469	469	469	469	469	469	469	469	469	469	469
4.7 pF		479	479	479	479	479	479	479	479	479	479	479	479	479	479
4.8 pF		489	489	489	489	489	489	489	489	489	489	489	489	489	489
4.9 pF		499	499	499	499	499	499	499	499	499	499	499	499	499	499
Rated Voltage (VDC)		**6.3**	**10**	**25**	**50**	**25**	**50**	**100**	**50**	**100**	**250**	**50**	**100**	**250**	**500**
Voltage Code		**9**	**8**	**3**	**5**	**3**	**5**	**1**	**5**	**1**	**A**	**5**	**1**	**A**	**C**

** Available only in "B" (±0.1pF) capacitance tolerance.*

Table 1 – CBR Series, Capacitance Range Waterfall cont'd

Case Size – Inches (mm)		0201 (0603)				0402 (1005)			0603 (1608)			0805 (2012)			
Length	mm (Inches)	0.60 ± 0.03 (0.024 ± 0.001)				1.00 ± 0.05 (0.040 ± 0.002)			1.60 ± 0.10 (0.063 ± 0.004)			2.00 ± 0.20 (0.079 ± 0.008)			
Width	mm (Inches)	0.30 ± 0.03 (0.012 ± 0.001)				0.50 ± 0.05 (0.020 ± 0.002)			0.80 ± 0.10 (0.031 ± 0.004)			1.25 ± 0.20 (0.049 ± 0.008)			
Thickness	mm (Inches)	0.30 ± 0.03 (0.012 ± 0.001)				0.50 ± 0.05 (0.020 ± 0.002)			0.80 ± 0.07 (0.031 ± 0.003)			0.85 ± 0.10 (0.031 ± 0.004)			
Bandwidth	mm (Inches)	0.15 ± 0.05 (0.006 ± 0.002)				0.25 + 0.05 / -0.10 (0.010 + 0.002 / -0.004)			0.40 ± 0.15 (0.016 ± 0.006)			0.50 ± 0.20 (0.020 ± 0.008)			
Rated Voltage (VDC)		**6.3**	**10**	**25**	**50**	**25**	**50**	**100**	**50**	**100**	**250**	**50**	**100**	**250**	**500**
Voltage Code		**9**	**8**	**3**	**5**	**3**	**5**	**1**	**5**	**1**	**A**	**5**	**1**	**A**	**C**
Capacitance	**Capacitance Tolerance**	**Capacitance Code (Available Capacitance)**													
5.0 pF	A = ±0.05 pF B = ±0.1 pF C = ±0.25 pF	509	509	509	509	509	509	509	509	509	509	509	509	509	509
5.1 pF		519	519	519	519	519	519	519	519	519	519	519	519	519	519
5.2 pF		529	529	529	529	529	529	529	529	529	529	529	529	529	529
5.3 pF		539	539	539	539	539	539	539	539	539	539	539	539	539	539
5.4 pF		549	549	549	549	549	549	549	549	549	549	549	549	549	549
5.5 pF		559	559	559	559	559	559	559	559	559	559	559	559	559	559
5.6 pF		569	569	569	569	569	569	569	569	569	569	569	569	569	569
5.7 pF		579	579	579	579	579	579	579	579	579	579	579	579	579	579
5.8 pF		589	589	589	589	589	589	589	589	589	589	589	589	589	589
5.9 pF		599	599	599	599	599	599	599	599	599	599	599	599	599	599
6.0 pF		609	609	609	609	609	609	609	609	609	609	609	609	609	609
6.1 pF		619	619	619	619	619	619	619	619	619	619	619	619	619	619
6.2 pF		629	629	629	629	629	629	629	629	629	629	629	629	629	629
6.3 pF		639	639	639	639	639	639	639	639	639	639	639	639	639	639
6.4 pF		649	649	649	649	649	649	649	649	649	649	649	649	649	649
6.5 pF		659	659	659	659	659	659	659	659	659	659	659	659	659	659
6.6 pF		669	669	669	669	669	669	669	669	669	669	669	669	669	669
6.7 pF		679	679	679	679	679	679	679	679	679	679	679	679	679	679
6.8 pF		689	689	689	689	689	689	689	689	689	689	689	689	689	689
6.9 pF		699	699	699	699	699	699	699	699	699	699	699	699	699	699
7.0 pF		709	709	709	709	709	709	709	709	709	709	709	709	709	709
7.1 pF		719	719	719	719	719	719	719	719	719	719	719	719	719	719
7.2 pF	B = ±0.1 pF	729	729	729	729	729	729	729	729	729	729	729	729	729	729
7.3 pF	C = ±0.25 pF	739	739	739	739	739	739	739	739	739	739	739	739	739	739
7.4 pF	D = ±0.5 pF	749	749	749	749	749	749	749	749	749	749	749	749	749	749
7.5 pF		759	759	759	759	759	759	759	759	759	759	759	759	759	759
7.6 pF		769	769	769	769	769	769	769	769	769	769	769	769	769	769
7.7 pF		779	779	779	779	779	779	779	779	779	779	779	779	779	779
7.8 pF		789	789	789	789	789	789	789	789	789	789	789	789	789	789
7.9 pF		799	799	799	799	799	799	799	799	799	799	799	799	799	799
8.0 pF		809	809	809	809	809	809	809	809	809	809	809	809	809	809
8.1 pF		819	819	819	819	819	819	819	819	819	819	819	819	819	819
8.2 pF		829	829	829	829	829	829	829	829	829	829	829	829	829	829
8.3 pF		839	839	839	839	839	839	839	839	839	839	839	839	839	839
8.4 pF		849	849	849	849	849	849	849	849	849	849	849	849	849	849
8.5 pF		859	859	859	859	859	859	859	859	859	859	859	859	859	859
8.6 pF		869	869	869	869	869	869	869	869	869	869	869	869	869	869
8.7 pF		879	879	879	879	879	879	879	879	879	879	879	879	879	879
8.8 pF		889	889	889	889	889	889	889	889	889	889	889	889	889	889
8.9 pF		899	899	899	899	899	899	899	899	899	899	899	899	899	899
9.0 pF		909	909	909	909	909	909	909	909	909	909	909	909	909	909
9.1 pF		919	919	919	919	919	919	919	919	919	919	919	919	919	919
9.2 pF		929	929	929	929	929	929	929	929	929	929	929	929	929	929
9.3 pF		939	939	939	939	939	939	939	939	939	939	939	939	939	939
9.4 pF		949	949	949	949	949	949	949	949	949	949	949	949	949	949
9.5 pF		959	959	959	959	959	959	959	959	959	959	959	959	959	959
Rated Voltage (VDC)		**6.3**	**10**	**25**	**50**	**25**	**50**	**100**	**50**	**100**	**250**	**50**	**100**	**250**	**500**
Voltage Code		**9**	**8**	**3**	**5**	**3**	**5**	**1**	**5**	**1**	**A**	**5**	**1**	**A**	**C**

Table 1 – CBR Series, Capacitance Range Waterfall cont'd

Case Size – Inches (mm)		0201 (0603)				0402 (1005)			0603 (1608)			0805 (2012)			
Length	mm (Inches)	0.60 ± 0.03 (0.024 ± 0.001)				1.00 ± 0.05 (0.040 ± 0.002)			1.60 ± 0.10 (0.063 ± 0.004)			2.00 ± 0.20 (0.079 ± 0.008)			
Width	mm (Inches)	0.30 ± 0.03 (0.012 ± 0.001)				0.50 ± 0.05 (0.020 ± 0.002)			0.80 ± 0.10 (0.031 ± 0.004)			1.25 ± 0.20 (0.049 ± 0.008)			
Thickness	mm (Inches)	0.30 ± 0.03 (0.012 ± 0.001)				0.50 ± 0.05 (0.020 ± 0.002)			0.80 ± 0.07 (0.031 ± 0.003)			0.85 ± 0.10 (0.031 ± 0.004)			
Bandwidth	mm (Inches)	0.15 ± 0.05 (0.006 ± 0.002)				0.25 + 0.05 / -0.10 (0.010 + 0.002 / -0.004)			0.40 ± 0.15 (0.016 ± 0.006)			0.50 ± 0.20 (0.020 ± 0.008)			
Rated Voltage (VDC)		**6.3**	**10**	**25**	**50**	**25**	**50**	**100**	**50**	**100**	**250**	**50**	**100**	**250**	**500**
Voltage Code		**9**	**8**	**3**	**5**	**3**	**5**	**1**	**5**	**1**	**A**	**5**	**1**	**A**	**C**
Capacitance	**Capacitance Tolerance**	**Capacitance Code (Available Capacitance)**													
9.6 pF	B = ±0.1 pF C = ±0.25 pF D = ±0.5 pF	969	969	969	969	969	969	969	969	969	969	969	969	969	969
9.7 pF		979	979	979	979	979	979	979	979	979	979	979	979	979	979
9.8 pF		989	989	989	989	989	989	989	989	989	989	989	989	989	989
9.9 pF		999	999	999	999	999	999	999	999	999	999	999	999	999	999
10 pF	F = ±1% G = ±2% J = ±5%	100	100	100	100	100	100	100	100	100	100	100	100	100	100
11 pF		110	110	110	110	110	110	110	110	110	110	110	110	110	110
12 pF		120	120	120	120	120	120	120	120	120	120	120	120	120	120
13 pF		130	130	130	130	130	130	130	130	130	130	130	130	130	130
15 pF		150	150	150	150	150	150	150	150	150	150	150	150	150	150
16 pF		160	160	160	160	160	160	160	160	160	160	160	160	160	160
18 pF		180	180	180	180	180	180	180	180	180	180	180	180	180	180
20 pF		200	200	200	200	200	200	200	200	200	200	200	200	200	200
22 pF		220	220	220		220	220	220	220	220	220	220	220	220	220
24 pF		240	240	240		240	240	240	240	240	240	240	240	240	240
27 pF		270	270	270		270	270	270	270	270	270	270	270	270	270
30 pF		300	300	300		300	300	300	300	300	300	300	300	300	300
33 pF		330	330	330		330	330	330	330	330	330	330	330	330	330
36 pF						360	360	360	360	360	360	360	360	360	360
39 pF						390	390	390	390	390	390	390	390	390	390
43 pF						430	430	430	430	430	430	430	430	430	430
47 pF						470	470	470	470	470	470	470	470	470	470
51 pF						510	510	510				510	510	510	510
56 pF						560	560	560				560	560	560	560
62 pF						620						620	620	620	620
68 pF						680						680	680	680	680
75 pF						750						750	750	750	
82 pF						820						820	820	820	
91 pF						910						910	910	910	
100 pF						101						101	101	101	
Rated Voltage (VDC)		**6.3**	**10**	**25**	**50**	**25**	**50**	**100**	**50**	**100**	**250**	**50**	**100**	**250**	**500**
Voltage Code		**9**	**8**	**3**	**5**	**3**	**5**	**1**	**5**	**1**	**A**	**5**	**1**	**A**	**C**

Table 2 – Chip Thickness/Reeling Quantities

Chip Size Inches (mm)	Chip Thickness (mm)	Reel Quantity	
		7" Paper	13" Paper
0201 (0603)	0.30 ±0.03	15,000	Contact KEMET for availability.
0402 (1005)	0.50 ±0.05	10,000	
0603 (1608)	0.80 ±0.07	4,000	
0805 (2012)	0.85 ±0.10	4,000	

Table 3 – Chip Capacitor Land Pattern Design Recommendations per IPC–7351 (mm)

Case Size (Inches)	Case Size (mm)	Density Level A: Maximum (Most) Land Protrusion					Density Level B: Median (Nominal) Land Protrusion					Density Level C: Minimum (Least) Land Protrusion				
		C	Y	X	V1	V2	C	Y	X	V1	V2	C	Y	X	V1	V2
0201	0603	0.38	0.56	0.52	1.80	1.00	0.33	0.46	0.42	1.50	0.80	0.28	0.36	0.32	1.20	0.60
0402	1005	0.50	0.72	0.72	2.20	1.20	0.45	0.62	0.62	1.90	1.00	0.40	0.52	0.52	1.60	0.80
0603	1608	0.90	1.15	1.10	4.00	2.10	0.80	0.95	1.00	3.10	1.50	0.60	0.75	0.90	2.40	1.20
0805	2012	1.00	1.35	1.55	4.40	2.60	0.90	1.15	1.45	3.50	2.00	0.75	0.95	1.35	2.80	1.70

Density Level A: *For low-density product applications. Recommended for wave solder applications and provides a wider process window for reflow solder processes. KEMET only recommends wave soldering of 0603(1608) and 0805 (2012) case sizes.*
Density Level B: *For products with a moderate level of component density. Provides a robust solder attachment condition for reflow solder processes.*
Density Level C: *For high component density product applications. Before adapting the minimum land pattern variations the user should perform qualification testing based on the conditions outlined in IPC Standard 7351 (IPC–7351).*

Image below based on Density Level B for an EIA 1608 case size.

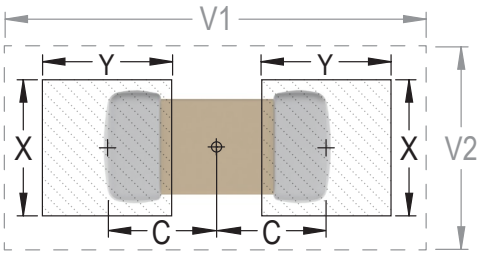

Grid Placement Courtyard

Soldering Process

Recommended Soldering Technique:

- Solder wave or solder reflow for 0603 and 0805 case sizes
- 0201 and 0402 case sizes are limited to solder reflow only

Recommended Soldering Profile:

- KEMET recommends following the guidelines outlined in IPC/JEDEC J–STD–020

Recommended Solder Alloys:

Alloy	Composition	Solidus	Liquidous
In50	50 In, 50 Pb	180°C	209°C
In52	52 In, 48 Sn	118°C	118°C
Sn62	62.5 Sn, 36.1 Pb, 1.4 Ag	179°C	179°C
Sn63	63 Sn, 37 Pb	183°C	183°C
Pb-Free	95.5 Sn, 3.8 Ag, 0.7 Cu	217°C	217°C
Hi-Temp	5 Sn, 93.5 Pb, 1.5 Ag	296°C	301°C
Sn5	5 Sn, 95 Pb	308°C	312°C

Table 4 – Performance & Reliability: Test Methods & Conditions

<table>
<tr><th>Stress</th><th>Test or Inspection Method</th><th>Requirements</th></tr>
<tr><td>Terminal Strength</td><td>Pressurizing force:
0201 case size: 2N
0402 & 0603 case sizes: 5N
0805 case size: 10N
Test time: 10 ±1 second</td><td>No visible damage or separation of termination system.</td></tr>
<tr><td>Vibration Resistance</td><td>Vibration frequency: 10 ~ 55 Hz/minimum
Total amplitude: 1.5 mm
Test time: 6 hours (Two hours each in three mutually perpendicular directions.)</td><td>No visible damage.
Cap change and Q/DF: To meet initial specification</td></tr>
<tr><td>Solderability</td><td>Solder temperature: 235 ± 5°C
Dipping time: 2 ±0.5 seconds</td><td>95% minimum coverage of termination finish.</td></tr>
<tr><td>Board Flex</td><td>Capacitor is mounted to a substrate which is flexed by means of ram at a rate of 1 mm per second until the deflection becomes 1 mm. (Deflection is maintained for 5 ±1 second)
Store at room temperature for 24 ±2 hours before measuring electrical properties.</td><td>No visible damage.
Capacitance change: within ±5.0% or ±0.5 pF, whichever is larger.
(Capacitance change is monitored during flexure.)</td></tr>
<tr><td>Resistance to Soldering Heat</td><td>Solder temperature: 260 ±5°C
Dipping time: 10 ±1 second
Preheating: 120 to 150°C for 1 minute before immerse the capacitor in a eutectic solder.
Store at room temperature for 24 ±2 hours before measuring electrical properties.</td><td>No visible damage.
Capacitance change: within ±2.5% or ±0.25 pF, whichever is larger.
Q/DF, IR and dielectric strength: To meet initial requirements.
25% maximum leaching on each edge.</td></tr>
<tr><td>Temperature Cycling</td><td>5 cycles of steps 1 - 4:
<table>
<tr><th>Step</th><th>Temp. (ºC)</th><th>Time (min.)</th></tr>
<tr><td>1</td><td>Minimum operating temp. +0/-3</td><td>30 ±3</td></tr>
<tr><td>2</td><td>Room temp</td><td>2 ~ 3</td></tr>
<tr><td>3</td><td>Maximum operating temp. +3/-0</td><td>30 ±3</td></tr>
<tr><td>4</td><td>Room temp (25ºC)</td><td>2 ~ 3</td></tr>
</table>
Store at room temperature for 24 ± 2 hours before measuring electrical properties.</td><td>No visible damage.
Capacitance change: within ±2.5% or ±0.25 pF, whichever is larger.
Q/DF, IR and dielectric strength: To meet initial requirements.</td></tr>
<tr><td>Humidity (Damp Heat) Steady State</td><td>Test temperature: 40 ±2°C
Humidity: 90 ~ 95% RH
Test time: 500 +24/-0 hours
Store at room temperature for 24 ±2 hours before measuring electrical properties.</td><td>No visible damage.
Capacitance change: within ±5.0% or ±0.5 pF, whichever is larger.
Q/DF value: Capacitance ≥ 30 pF, Q ≥ 350,
10 pF ≤ Capacitance < 30 pF, Q ≥ 275 +2.5°C
Capacitance < 10 pF; Q ≥ 200 +10ºC
IR: ≥ 1GΩ</td></tr>
<tr><td>Humidity (Damp Heat) Load</td><td>Test temperature: 40 ±2°C
Humidity: 90 ~ 95% RH
Test time: 500 +24/-0 hours
Applied voltage: rated voltage
Store at room temperature for 24 ±2 hours before measuring electrical properties.</td><td>No visible damage.
Capacitance change: within ±7.5% or ±0.75 pF, whichever is larger.
Q/DF value: Capacitance ≥ 30 pF, Q ≥ 200,
Capacitance < 30 pF, Q ≥ 100+10/3ºC
IR: ≥ 500MΩ</td></tr>
<tr><td>High Temperature Life</td><td>Test temperature: 125 ±3°C
Applied voltage:
200% of rated voltage (6.3 VDC - 250 VDC)
150% of rated voltage (500 VDC)
Test time: 1,000 +24/-0 hours
Store at room temperature for 24 ±2 hours before measuring electrical properties.</td><td>No visible damage.
Capacitance change: within ±3.0% or ±0.3 pF, whichever is larger.
Q/DF value: Capacitance ≥ 30 pF, Q ≥350,
10 pF ≤ Capacitance < 30 pF, Q ≥ 275 +2.5°C
Capacitance <10 pF, Q ≥ 200 +10°C
IR: ≥1 GΩ</td></tr>
</table>

Storage and Handling

Ceramic chip capacitors should be stored in normal working environments. While the chips themselves are quite robust in other environments, solderability will be degraded by exposure to high temperatures, high humidity, corrosive atmospheres, and long term storage. In addition, packaging materials will be degraded by high temperature– reels may soften or warp and tape peel force may increase. KEMET recommends that maximum storage temperature not exceed 40ºC and maximum storage humidity not exceed 70% relative humidity. Temperature fluctuations should be minimized to avoid condensation on the parts and atmospheres should be free of chlorine and sulfur bearing compounds. For optimized solderability chip stock should be used promptly, preferably within 1.5 years of receipt.

Construction

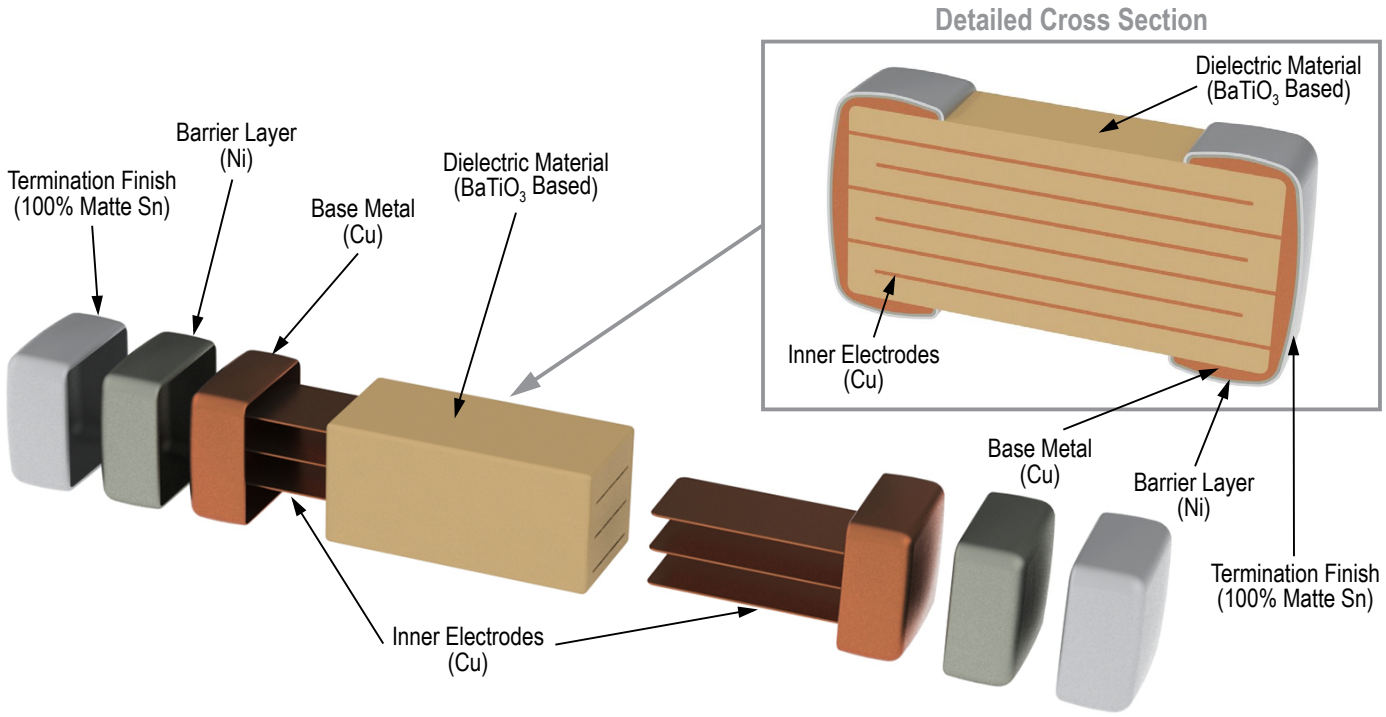

Marking

CBR series devices are supplied unmarked.
If you require marked product, please contact KEMET for availability of a laser-marked option.

Tape & Reel Packaging Information

KEMET offers RF and Microwave Multilayer Ceramic Chip Capacitors packaged in 8 mm tape on 7" reels. This packaging system is compatible with all tape-fed automatic pick and place systems.

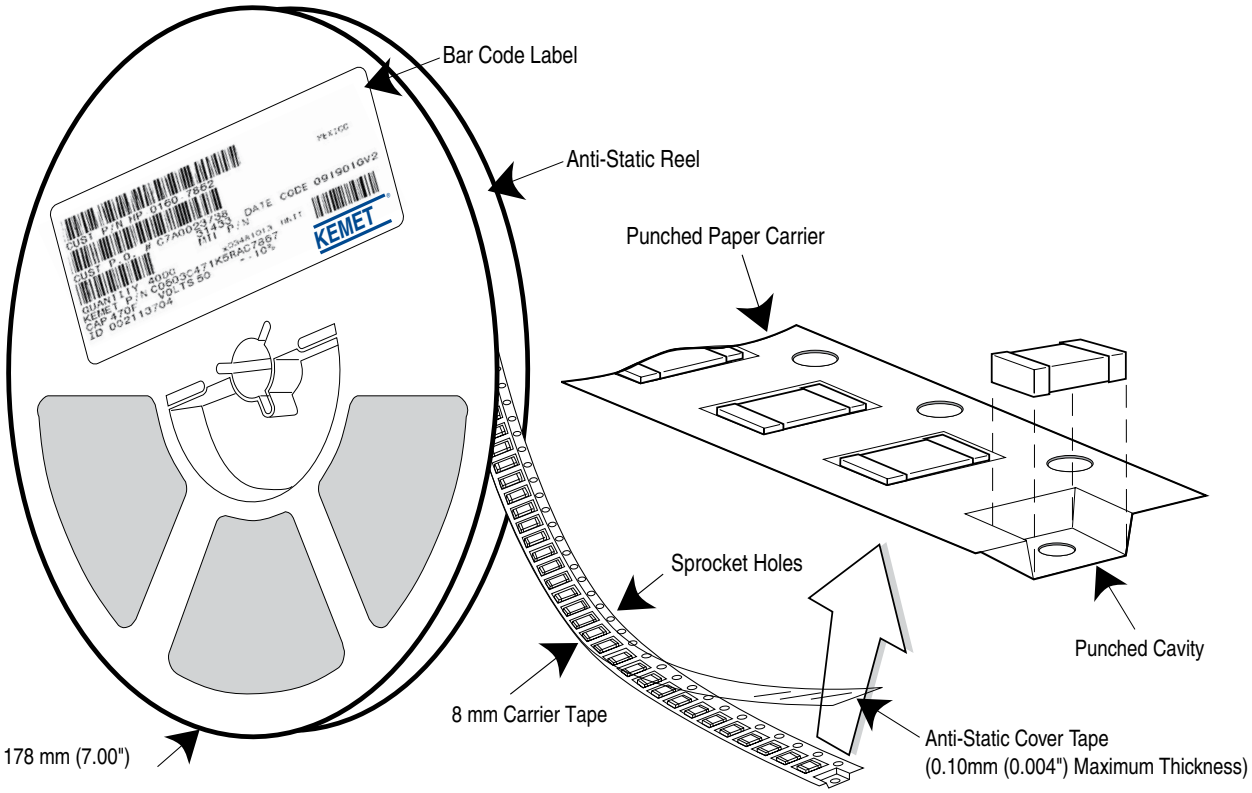

Table 5 – Carrier Tape Configuration (mm)

EIA Case Size	Tape Size (W)*	Lead Space (P_1)*
0201 – 0402	8	2
0603 – 1210	8	4

**Refer to Figure 1 for W and P_1 carrier tape reference locations.*
**Refer to Table 6 for tolerance specifications.*

Figure 1 – Punched (Paper) Carrier Tape Dimensions

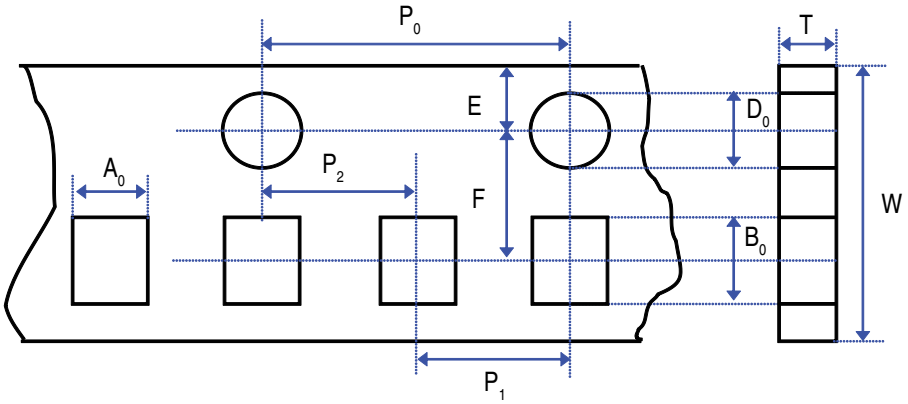

Table 6 – Punched (Paper) Carrier Tape Dimensions

Metric will govern

Constant Dimensions — Millimeters (Inches)					
Tape Size	D_0	E_1	P_0	P_2	R Reference Note 2
8 mm	1.55 +0.05 (0.061 +0.002)	1.55 ±0.05 (0.061 ±0.002)	4.0 ±0.10 (0.157 ±0.004)	2.0 ±0.05 (0.079 ±0.002)	25.0 (0.984)

Variable Dimensions — Millimeters (Inches)					
Tape Size	Pitch	F	P_1	T	W
8 mm	Half (2 mm)	3.5 ±0.05 (0.138 ±0.002)	2.0 ±0.05 (0.079 ±0.002)	0.42 ±0.05 (0.017 ±0.002)	8.0 ±0.10 (0.315 ±0.004)
				0.60 ±0.05 (0.024 ±0.002)	
8 mm	Single (4 mm)		4.0 ±0.10 (0.157 ±0.004)	0.95 ±0.05 (0.037 ±0.002)	
				0.97 ±0.05 (0.038 ±0.002)	
				0.75 ±0.05 (0.030 ±0.002)	

2. The tape with or without components shall pass around R without damage (see Figure 3).

Packaging Information Performance Notes

1. Cover Tape Break Force: 1.0 Kg minimum.
2. Cover Tape Peel Strength: The total peel strength of the cover tape from the carrier tape shall be:

Tape Width	Peel Strength
8 mm	0.1 to 1.0 Newton (10 to 100 gf)
12 and 16 mm	0.1 to 1.3 Newton (10 to 130 gf)

The direction of the pull shall be opposite the direction of the carrier tape travel. The pull angle of the carrier tape shall be 165° to 180° from the plane of the carrier tape. During peeling, the carrier and/or cover tape shall be pulled at a velocity of 300 ±10 mm/minute.
3. Labeling: Bar code labeling (standard or custom) shall be on the side of the reel opposite the sprocket holes. *Refer to EIA Standards 556 and 624*.

Figure 2 – Bending Radius

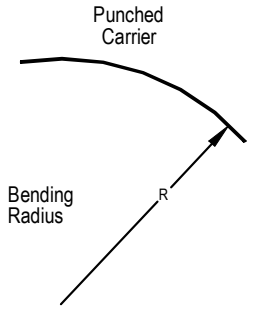

Figure 3 – Tape Leader & Trailer Dimensions

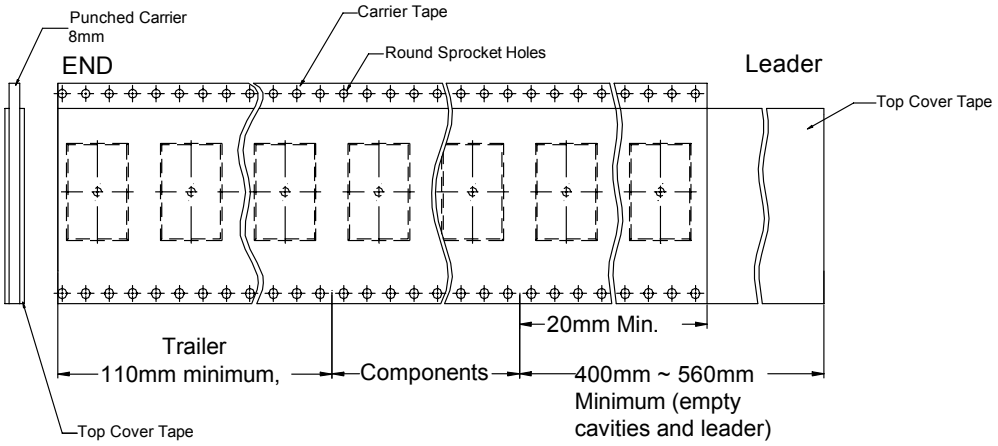

Figure 4 – Maximum Camber

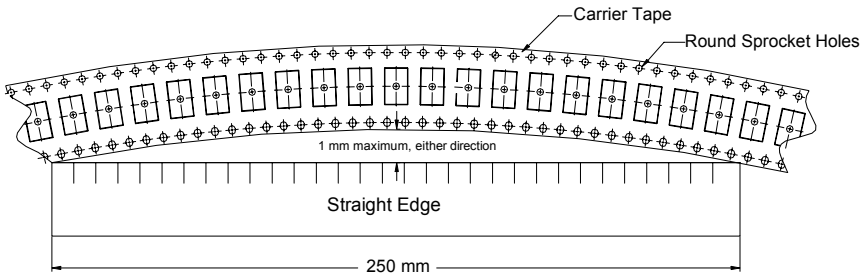

Figure 5 – Reel Dimensions

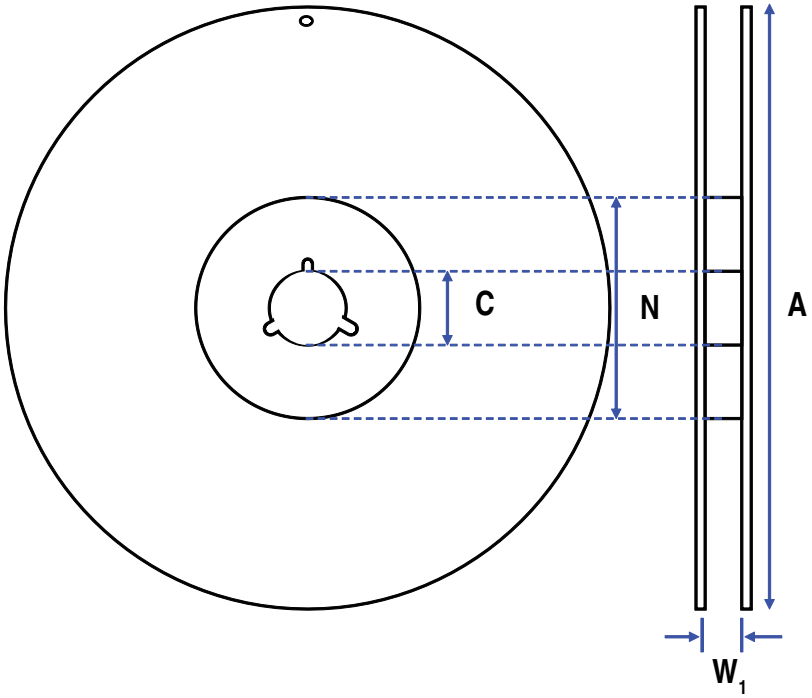

Table 7 – Reel Dimensions

Metric will govern

Constant Dimensions — Millimeters (Inches)			
Tape Size	Reel Size	A	C
8 mm	7	178 ±0.10 (7.008 ±0.004)	13.0 ±0.20 (0.512 ±0.008)
Variable Dimensions — Millimeters (Inches)			
Tape Size	N Minimum See Note 2, Table 6	W_1	
8 mm	50 (1.969)	8.4 +1.5/ -0.0 (0.331 +0.059/ -0.0)	

KEMET Corporation World Headquarters

2835 KEMET Way
Simpsonville, SC 29681

Mailing Address:
P.O. Box 5928
Greenville, SC 29606

www.kemet.com
Tel: 864-963-6300
Fax: 864-963-6521

Corporate Offices
Fort Lauderdale, FL
Tel: 954-766-2800

North America

Southeast
Lake Mary, FL
Tel: 407-855-8886

Northeast
Wilmington, MA
Tel: 978-658-1663

Central
Novi, MI
Tel: 248-306-9353

West
Milpitas, CA
Tel: 408-433-9950

Mexico
Guadalajara, Jalisco
Tel: 52-33-3123-2141

Europe

Southern Europe
Paris, France
Tel: 33-1-4646-1006

Sasso Marconi, Italy
Tel: 39-051-939111

Central Europe
Landsberg, Germany
Tel: 49-8191-3350800

Kamen, Germany
Tel: 49-2307-438110

Northern Europe
Bishop's Stortford, United Kingdom
Tel: 44-1279-460122

Espoo, Finland
Tel: 358-9-5406-5000

Asia

Northeast Asia
Hong Kong
Tel: 852-2305-1168

Shenzhen, China
Tel: 86-755-2518-1306

Beijing, China
Tel: 86-10-5829-1711

Shanghai, China
Tel: 86-21-6447-0707

Taipei, Taiwan
Tel: 886-2-27528585

Southeast Asia
Singapore
Tel: 65-6586-1900

Penang, Malaysia
Tel: 60-4-6430200

Bangalore, India
Tel: 91-806-53-76817

Note: KEMET reserves the right to modify minor details of internal and external construction at any time in the interest of product improvement. KEMET does not assume any responsibility for infringement that might result from the use of KEMET Capacitors in potential circuit designs. KEMET is a registered trademark of KEMET Electronics Corporation.

Disclaimer

All product specifications, statements, information and data (collectively, the "Information") in this datasheet are subject to change. The customer is responsible for checking and verifying the extent to which the Information contained in this publication is applicable to an order at the time the order is placed.

All Information given herein is believed to be accurate and reliable, but it is presented without guarantee, warranty, or responsibility of any kind, expressed or implied.

Statements of suitability for certain applications are based on KEMET Electronics Corporation's ("KEMET") knowledge of typical operating conditions for such applications, but are not intended to constitute – and KEMET specifically disclaims – any warranty concerning suitability for a specific customer application or use. The Information is intended for use only by customers who have the requisite experience and capability to determine the correct products for their application. Any technical advice inferred from this Information or otherwise provided by KEMET with reference to the use of KEMET's products is given gratis, and KEMET assumes no obligation or liability for the advice given or results obtained.

Although KEMET designs and manufactures its products to the most stringent quality and safety standards, given the current state of the art, isolated component failures may still occur. Accordingly, customer applications which require a high degree of reliability or safety should employ suitable designs or other safeguards (such as installation of protective circuitry or redundancies) in order to ensure that the failure of an electrical component does not result in a risk of personal injury or property damage.

Although all product–related warnings, cautions and notes must be observed, the customer should not assume that all safety measures are indicted or that other measures may not be required.