THIS DRAWING IS UNPUBLISHED. RELEASED FOR PUBLICATION - -.
© COPYRIGHT - BY TYCO ELECTRONICS CORPORATION. ALL RIGHTS RESERVED.

LOC	DIST
FT	0

REVISIONS

P	LTR	DESCRIPTION	DATE	DWN	APVD
	F	REVISED PER 0G3B-1163-04	2/28/05	SS	CR
	F1	REVISED PER ECO-09-022908	08OCT09	KK	AEG

1. MATERIALS:
   HOUSING: HIGH TEMPERATURE NYLON, COLOR: SEE TABLE.
   CONTACT: PHOSPHOR BRONZE.
   CLAMP: ZAMAC5 ZINC DIE-CASTING.
   SCREW: STEEL.
2. CONTACT FINISH: 3.8um [.000150] MIN TIN, POM SOLDER POST.
3. BOARD RETENTION FEATURE WHERE INDICATED.
4. DATUMS AND BASIC DIMENSIONS ESTABLISHED BY CUSTOMER.
5. CLAMP FINISH: 2.5um [.000100] MIN ZINC (CHROMATE).
6. CLAMP FINISH: 2.5um [.000100] MIN CLEAR TRI-CHROME.
7. OBSOLETE PARTS: OBSOLETE CIS STREAMLINING PER D.RENAUD/D.SINISI

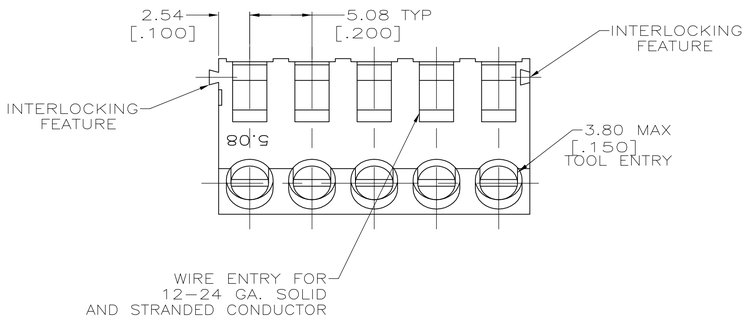

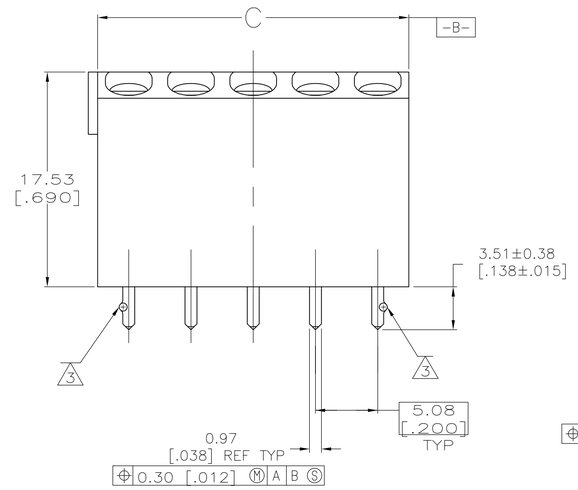

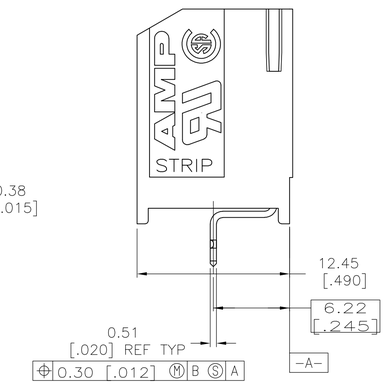

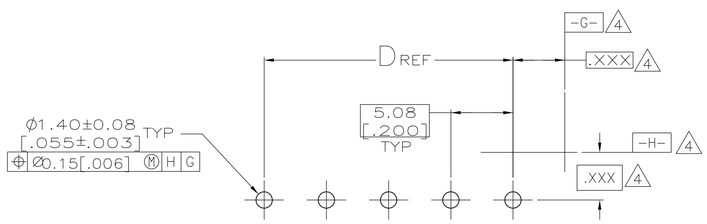

PC BOARD LAYOUT

	D	C	CLAMP FINISH	MATERIAL COLOR	NO OF POSN	PART NO.
	20.32 [.800]	25.40 [1.000]	6	BLACK	5	2-786473-3
	15.24 [.600]	20.32 [.800]	6	BLACK	4	2-786473-2
	10.16 [.400]	15.24 [.600]	6	BLACK	3	2-786473-1
OBSOLETE	40.64 [1.600]	45.72 [1.800]	5	NATURAL	9	2-786473-0
OBSOLETE	30.48 [1.200]	35.56 [1.400]	5	NATURAL	7	1-786473-9
OBSOLETE	25.40 [1.000]	30.48 [1.200]	5	NATURAL	6	1-786473-8
OBSOLETE	40.64 [1.600]	45.72 [1.800]	5	BLACK	9	1-786473-7
OBSOLETE	30.48 [1.200]	35.56 [1.400]	5	BLACK	7	1-786473-6
OBSOLETE	25.40 [1.000]	30.48 [1.200]	5	BLACK	6	1-786473-5
OBSOLETE	45.72 [1.800]	50.80 [2.000]	5	NATURAL	10	1-786473-4
OBSOLETE	35.56 [1.400]	40.64 [1.600]	5	NATURAL	8	1-786473-3
OBSOLETE	20.32 [.800]	25.40 [1.000]	5	NATURAL	5	1-786473-2
OBSOLETE	15.24 [.600]	20.32 [.800]	5	NATURAL	4	1-786473-1
OBSOLETE	10.16 [.400]	15.24 [.600]	5	NATURAL	3	1-786473-0
OBSOLETE	5.08 [.200]	10.16 [.400]	5	NATURAL	2	786473-9
OBSOLETE	- -	5.08 [.200]	5	NATURAL	1	786473-8
OBSOLETE	45.72 [1.800]	50.80 [2.000]	5	BLACK	10	786473-7
OBSOLETE	35.56 [1.400]	40.64 [1.600]	5	BLACK	8	786473-6
OBSOLETE	20.32 [.800]	25.40 [1.000]	5	BLACK	5	~~786473-5~~
7 OBSOLETE	15.24 [.600]	20.32 [.800]	5	BLACK	4	~~786473-4~~
7 SUPERCEDED	10.16 [.400]	15.24 [.600]	5	BLACK	3	~~786473-3~~
OBSOLETE	5.08 [.200]	10.16 [.400]	5	BLACK	2	786473-2
OBSOLETE	- -	5.08 [.200]	5	BLACK	1	786473-1

THIS DRAWING IS A CONTROLLED DOCUMENT

DIMENSIONS: mm [INCHES]

TOLERANCES UNLESS OTHERWISE SPECIFIED:
0 PLC ± -
1 PLC ± -
2 PLC ± 0.13 [.005]
3 PLC ± -
4 PLC ± -
ANGLES ± -

MATERIAL -
FINISH -

DWN S.G.SMITH 03/24/92
CHK B.H.MOSSER 06/01/92
APVD -
PRODUCT SPEC -
APPLICATION SPEC -
WEIGHT -

Tyco Electronics
Tyco Electronics Corporation
Harrisburg, Pa 17105-3608

NAME CONNECTOR ASSEMBLY, BOARDMOUNT, VERTICAL, 5.08mm

SIZE	CAGE CODE	DRAWING NO	RESTRICTED TO
A1	00779	C-786473	-

CUSTOMER DRAWING SCALE 4:1 SHEET 1 OF 1 REV F1