MECHANICAL SPECIFICATION

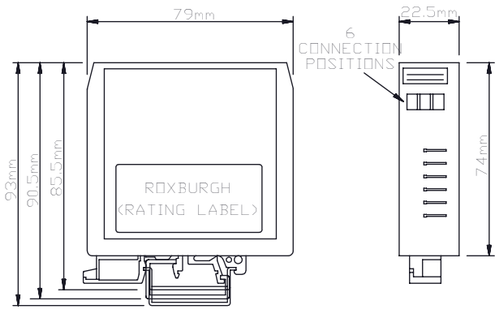

ELECTRICAL SPECIFICATION

RATED VOLTAGE	250V AC
LINE FREQUENCY	DC TO 440Hz
TEMPERATURE RANGE	-25 TO +85DegC
TEST VOLTAGE	2.0kV DC
MOUNTING	EN 50 022 (TOP HAT) & EN 50 035 (G PROFILE)
SCREW TERMINALS	2.5sq.mm (12 AWG)
LEAKAGE	1.46 mA

ELECTRICAL SCHEMATIC

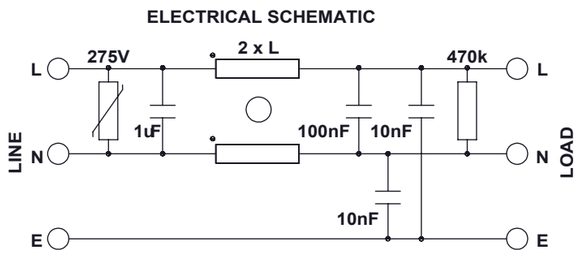

PRODUCT RANGE

TYPE	CURRENT I(Amps) @ 40°C	INDUCTANCE L(mH)	RESISTANCE (R) PER WINDING
DRF01	1.0	18	640
DRF03	3.0	3.2	71
DRF06	6.0	1.4	19
DRF08	8.0	1.5	15
DRF10	10.0	0.85	12

PROPRIETARY AND CONFIDENTIAL
THE INFORMATION CONTAINED IN THIS DRAWING IS THE SOLE PROPERTY OF **DEM MANUFACTURING**. ANY REPRODUCTION IN PART OR AS A WHOLE WITHOUT THE WRITTEN PERMISSION OF **DEM MANUFACTURING** IS PROHIBITED.

Drawn by spb 10/07/09

FINISH: 1 PHASE 250V DIN RAIL MOUNTED FILTER

THIRD ANGLE PROJECTION

DEBUR AND BREAK SHARP EDGES

IF IN DOUBT ASK DO NOT SCALE DRAWING

UNLESS OTHERWISE SPECIFIED: DIMENSIONS ARE IN MILLIMETRES LINEAR TOLERANCES:

NO DECIMAL PLACES ±0.5mm
1 DECIMAL PLACE ±0.1mm
2 DECIMAL PLACES ±0.03mm

ANGULAR TOLERANCES: ±1°

MATERIAL: .

A3

TITLE: GENERAL SPECIFICATION FOR DRFXX .

DWG NO. DRFXX-GS

ISSUE 04

TEL: +44 1724 273200 E-MAIL: SALES@DEM-UK.COM WEBSITE: WWW.DEM-UK.COM

WEIGHT:

SCALE:1:1

SHEET 1 OF 1