Precision, Gain Selectable High Side Current Sense Amplifier

FEATURES

- **Input Offset Voltage: 300µV (Max)**
- **Sense Inputs Up to 48V**
- **0.5% Gain Accuracy**
- **Pin Selectable Gain: 10, 12.5, 20, 25, 40, 50V/V**
- Separate Power Supply: 2.7V to 36V
- Operating Current: 60µA
- Sense Input Current (V_{CC} Powered Down): 1nA
- Reverse Battery Protected to –48V
- Buffered Output
- Noise Filtering Input
- –40°C to 125°C Operating Temperature Range
- Available in 8-Lead DFN and MSOP Packages

APPLICATIONS

- Battery Monitoring
- Fuse Monitoring
- Portable and Cellular Phones
- Portable Test/Measurement Systems

, LT, LTC, LTM, Linear Technology, the Linear logo and Over-The-Top are registered trademarks of Linear Technology Corporation. All other trademarks are the property of their respective owners.

DESCRIPTION

The LT®6100 is a complete micropower, precision, high side current sense amplifier. The LT6100 monitors unidirectional currents via the voltage across an external sense resistor. Fixed gains of 10, 12.5, 20, 25, 40, 50V/V are obtained by simply strapping or floating two gain select pins. Gain accuracy is better than 0.5% for all gains.

The LT6100 sense inputs have a voltage range that extends from 4.1V to 48V, and can withstand a differential voltage of the full supply. This makes it possible to monitor the voltage across a MOSFET switch or a fuse. The part can also withstand a reverse battery condition on the inputs.

Input offset is a low 300µV. CMRR and PSRR are in excess of 105dB, resulting in a wide dynamic range. A filter pin is provided to easily implement signal filtering with a single capacitor.

The LT6100 has a separate supply input, which operates from 2.7V to 36V and draws only 60µA. When V_{CC} is powered down, the sense pins are biased off. This prevents loading of the monitored circuit, irrespective of the sense voltage. The LT6100 is available in an 8-lead DFN and MSOP package.

TYPICAL APPLICATION

0A to 33A High Side Current Monitor with 12kHz Frequency Rolloff

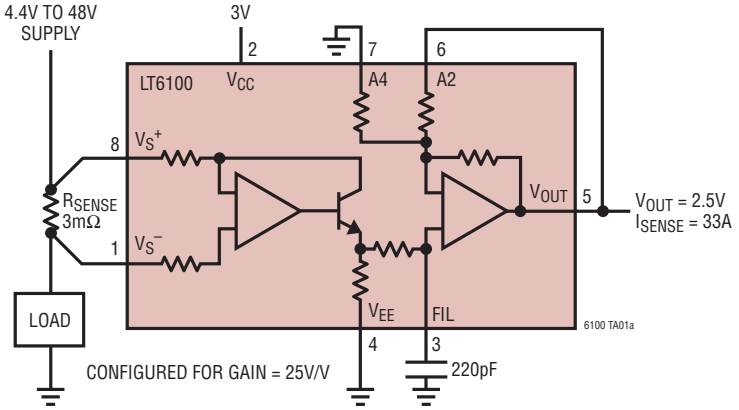

Input Offset Voltage vs V_S Sense Input Voltage

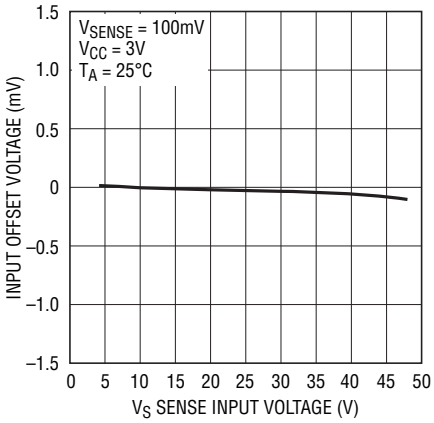

ABSOLUTE MAXIMUM RATINGS (Notes 1, 2)

Differential Sense Voltage ..... ±48V
Total V_S^+, V_S^- to V_{EE} 48V
Total V_{CC} Supply Voltage from V_{EE} 36V
Output Voltage ..... (V_{EE}) to (V_{EE} + 36V)
Output Short-Circuit Duration (Note 3) ..... Continuous
Operating Temperature Range (Note 4)
LT6100C ..... –40°C to 85°C
LT6100I ..... –40°C to 85°C
LT6100H ..... –40°C to 125°C

Specified Temperature Range (Note 5)
LT6100C ..... 0°C to 70°C
LT6100I ..... –40°C to 85°C
LT6100H ..... –40°C to 125°C
Storage Temperature Range .....
DFN ..... –65°C to 125°C
MSOP ..... –65°C to 150°C
Lead Temperature (Soldering, 10 sec)
MSOP ..... 300°C

PACKAGE/ORDER INFORMATION

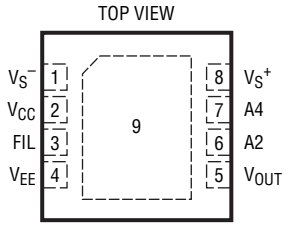

DD PACKAGE
8-LEAD (3mm × 3mm) PLASTIC DFN

T_{JMAX} = 125°C, θ_{JA} = 43°C/W
EXPOSED PAD (PIN 9) IS V_{EE}, MUST BE SOLDERED TO PCB

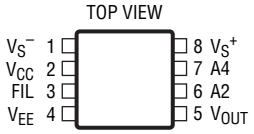

MS8 PACKAGE
8-LEAD PLASTIC MSOP

T_{JMAX} = 150°C, θ_{JA} = 250°C/W

ORDER INFORMATION

LEAD FREE FINISH	TAPE AND REEL	PART MARKING*	PACKAGE DESCRIPTION	SPECIFIED TEMPERATURE RANGE
LT6100CDD#PBF	LT6100CDD#TRPBF	LBMW	8-Lead (3mm × 3mm) Plastic DFN	0°C to 70°C
LT6100IDD#PBF	LT6100IDD#TRPBF	LBMW	8-Lead (3mm × 3mm) Plastic DFN	–40°C to 85°C
LT6100HDD#PBF	LT6100HDD#TRPBF	LBMW	8-Lead (3mm × 3mm) Plastic DFN	–40°C to 125°C
LT6100CMS8#PBF	LT6100CMS8#TRPBF	LTBMV	8-Lead Plastic MS8	0°C to 70°C
LT6100IMS8#PBF	LT6100IMS8#TRPBF	LTBMV	8-Lead Plastic MS8	–40°C to 85°C
LT6100HMS8#PBF	LT6100HMS8#TRPBF	LTBMV	8-Lead Plastic MS8	–40°C to 125°C

Consult LTC Marketing for parts specified with wider operating temperature ranges. *The temperature grade is identified by a label on the shipping container.Consult LTC Marketing for information on nonstandard lead based finish parts.

For more information on lead free part marking, go to: http://www.linear.com/leadfree/
For more information on tape and reel specifications, go to: http://www.linear.com/tapeandreel/

ELECTRICAL CHARACTERISTICS

The ● denotes specifications which apply over the temperature range 0°C ≤ T_A ≤ 70°C (LT6100C), otherwise specifications are T_A = 25°C. V_{CC} = 5V, V_{EE} = 0V, V_S^+ = V_{CC} + 1.4V unless otherwise specified. (Note 5)

SYMBOL	PARAMETER	CONDITIONS		MIN	TYP	MAX	UNITS
V_S^-, V_S^+	Sense Amplifier Supply Voltage	V_{CC} = 2.7V	●	4.1		48	V
V_{SENSE}	Input Sense Voltage Full Scale	V_{SENSE} = $V_S^+ - V_S^-$, V_{CC} = 3V, A_V = 10V/V V_{SENSE} = $V_S^+ - V_S^-$, V_{CC} = 5V, A_V = 10V/V	● ●	110 300			mV mV
V_{OS}	Input Offset Voltage (MS Package)	I_{OUT} = 0	 ●	–300 –500	±80	300 500	µV µV
	Input Offset Voltage (DD Package)	I_{OUT} = 0	 ●	–350 –550	±80	350 550	µV µV
V_{OS} TC	Temperature Coefficient of V_{OS}	(Note 6)	●		0.5	3	µV/°C
A_V	Gain, V_{OUT}/V_{SENSE}	V_{SENSE} = 50mV to 80mV, A_V = 10V/V LT6100MS8 LT6100DD8	 ●	 9.95 9.94 9.90		 10.05 10.06 10.10	 V/V V/V V/V
		V_S = 48V, V_{SENSE} = 50mV to 80mV, A_V = 10V/V	●	9.90		10.10	V/V
	Output Voltage Gain Error (Note 7)	V_{SENSE} = 50mV to 80mV, A_V = 10, 12.5, 20, 25, 40, 50V/V LT6100MS8 LT6100DD8	 ●	 –0.5 –0.6 –1.0		 0.5 0.6 1.0	 % % %
		V_S = 48V, V_{SENSE} = 50mV to 80mV, A_V = 10, 12.5, 20, 25, 40, 50V/V	●	–1.0		1.0	%
V_S CMRR	V_S Sense Input Common Mode Rejection Ratio	V_{SENSE} = 50mV, V_{CC} = 2.7V, V_S = 4.1V to 36V	 ●	105 100	120 120		dB dB
V_{CC} PSRR	V_{CC} Supply Rejection Ratio	V_{SENSE} = 50mV, V_S = 36V, V_{CC} = 3V to 30V	 ●	105 100	120 120		dB dB
V_{CC}	Supply Voltage V_{CC}		●	2.7		36	V
BW	Bandwidth	A_V = 10V/V, f_O = –3dB, V_{CC} = 15V A_V = 50V/V, f_O = –3dB, V_{CC} = 15V		100 20	150 50		kHz kHz
t_S	Output Settling to 1% Final Value	V_{SENSE} = 10mV to 100mV			15		µs
$I_S^+{}_{(O)}$, $I_S^-{}_{(O)}$	Sense Input Current	V_{SENSE} = 0V	●		4.5	10	µA
$I_{CC(O)}$	V_{CC} Supply Current	V_{SENSE} = 0V	●		60	130	µA
SR	Slew Rate (Note 8)	V_{CC} = 15V, V_{SENSE} = 26mV to 380mV, A_V = 50V/V	 ●	0.03 0.02	0.05 0.05		V/µs V/µs
I_{SC}	Short-Circuit Current	I_{SC}^+, I_{SC}^-		8	15		mA
	Reverse V_S Supply	$I_{S(TOTAL)}$ = –200µA, V_{CC} = Open	●	50	60		V
$V_{O(MIN)}$	Minimum Output Voltage	V_{SENSE} = 0V, No Load V_{SENSE} = $V_S^+ - V_S^-$ = –100mV, A_V = 50V/V, No Load	●		15 15	30 25	mV mV
$V_{O(MAX)}$	Output High (Referred to V_{CC})	A_V = 50V/V, V_{SENSE} = 100mV, I_L = 0 V_{SENSE} = 100mV, I_L = 100µA V_{SENSE} = 100mV, I_L = 500µA V_{SENSE} = 100mV, I_L = 1mA	● ● ● ●		75 85 125 175	125 150 250 400	mV mV mV mV
I_S^+, I_S^- (Off)	Sense Input Current (Power Down)	V_{CC} = 0V, V_S = 48V, V_{SENSE} = 0V	●		0.001	1	µA

ELECTRICAL CHARACTERISTICS

The ● denotes specifications which apply over the temperature range –40°C ≤ T_A ≤ 85°C (LT6100I), otherwise specifications are T_A = 25°C. V_{CC} = 5V, V_{EE} = 0V, V_S^+ = V_{CC} + 1.4V unless otherwise specified. (Note 5)

SYMBOL	PARAMETER	CONDITIONS		MIN	TYP	MAX	UNITS
V_S^-, V_S^+	Sense Amplifier Supply Voltage	V_{CC} = 2.7V	●	4.1		48	V
V_{SENSE}	Input Sense Voltage Full Scale	V_{SENSE} = V_S^+ – V_S^-, V_{CC} = 3V, A_V = 10V/V V_{SENSE} = V_S^+ – V_S^-, V_{CC} = 5V, A_V = 10V/V	● ●	110 300			mV mV
V_{OS}	Input Offset Voltage (MS Package)	I_{OUT} = 0	 ●	–300 –550	±80	300 550	µV µV
	Input Offset Voltage (DD Package)	I_{OUT} = 0	 ●	–350 –600	±80	350 600	µV µV
V_{OS} TC	Temperature Coefficient of V_{OS}	(Note 6)	●		0.5	3	µV/°C
A_V	Gain, V_{OUT}/V_{SENSE}	V_{SENSE} = 50mV to 80mV, A_V = 10V/V LT6100MS8 LT6100DD8	 ●	 9.95 9.94 9.90		 10.05 10.06 10.10	 V/V V/V V/V
		V_S = 48V, V_{SENSE} = 50mV to 80mV, A_V = 10V/V	●	9.90		10.10	V/V
	Output Voltage Gain Error (Note 7)	V_{SENSE} = 50mV to 80mV, A_V = 10, 12.5, 20, 25, 40, 50V/V LT6100MS8 LT6100DD8	 ●	 –0.5 –0.6 –1.0		 0.5 0.6 1.0	 % % %
		V_S = 48V, V_{SENSE} = 50mV to 80mV, A_V = 10, 12.5, 20, 25, 40, 50V/V	●	–1.0		1.0	%
V_S CMRR	V_S Sense Input Common Mode Rejection Ratio	V_{SENSE} = 50mV, V_{CC} = 2.7V, V_S = 4.1V to 36V	 ●	105 100	120 120		dB dB
V_{CC} PSRR	V_{CC} Supply Rejection Ratio	V_{SENSE} = 50mV, V_S = 36V, V_{CC} = 3V to 30V	 ●	105 100	120 120		dB dB
V_{CC}	Supply Voltage V_{CC}		●	2.7		36	V
BW	Bandwidth	A_V = 10V/V, f_O = –3dB, V_{CC} = 15V A_V = 50V/V, f_O = –3dB, V_{CC} = 15V		100 20	150 50		kHz kHz
t_S	Output Settling to 1% Final Value	V_{SENSE} = 10mV to 100mV			15		µs
$I_S^+{}_{(O)}$, $I_S^-{}_{(O)}$	Sense Input Current	V_{SENSE} = 0V	●		4.5	10	µA
$I_{CC(O)}$	Supply Current	V_{SENSE} = 0V	●		60	145	µA
SR	Slew Rate (Note 8)	V_{CC} = 15V, V_{SENSE} = 26mV to 380mV, A_V = 50V/V	 ●	0.03 0.02	0.05 0.05		V/µs V/µs
I_{SC}	Short-Circuit Current	I_{SC}^+, I_{SC}^-		8	15		mA
	Reverse V_S Supply	$I_{S(TOTAL)}$ = –200µA, V_{CC} = Open	●	50	60		V
$V_{O(MIN)}$	Minimum Output Voltage	V_{SENSE} = 0V, No Load V_{SENSE} = V_S^+ – V_S^- = –100mV, A_V = 50V/V, No Load	●		15 15	30 25	mV mV
$V_{O(MAX)}$	Output High (Referred to V_{CC})	A_V = 50V/V, V_{SENSE} = 100mV, I_L = 0 V_{SENSE} = 100mV, I_L = 100µA V_{SENSE} = 100mV, I_L = 500µA V_{SENSE} = 100mV, I_L = 1mA	● ● ● ●		75 85 125 175	125 150 250 400	mV mV mV mV
I_S^+, I_S^- (Off)	Sense Input Current (Power Down)	V_{CC} = 0V, V_S = 48V, V_{SENSE} = 0V	●		0.001	1	µA

ELECTRICAL CHARACTERISTICS

The ● denotes specifications which apply over the temperature range –40°C ≤ T_A ≤ 125°C (LT6100H), otherwise specifications are T_A = 25°C. V_{CC} = 5V, V_{EE} = 0V, V_S^+ = V_{CC} + 1.4V unless otherwise specified. (Note 5)

SYMBOL	PARAMETER	CONDITIONS		MIN	TYP	MAX	UNITS
V_S^-, V_S^+	Sense Amplifier Supply Voltage	V_{CC} = 2.7V	●	4.1		48	V
V_{SENSE}	Input Sense Voltage Full Scale	V_{SENSE} = V_S^+ – V_S^-, V_{CC} = 3V, A_V = 10V/V V_{SENSE} = V_S^+ – V_S^-, V_{CC} = 5V, AV = 10V/V	● ●	110 300			mV mV
V_{OS}	Input Offset Voltage (MS Package)	I_{OUT} = 0	 ●	–300 –600	±80	300 600	µV µV
	Input Offset Voltage (DD Package)	I_{OUT} = 0	 ●	–350 –650	±80	350 650	µV µV
V_{OS} TC	Temperature Coefficient of V_{OS}	(Note 6)	●		0.5	5	µV/°C
A_V	Gain, V_{OUT}/V_{SENSE}	V_{SENSE} = 50mV to 80mV, A_V = 10V/V LT6100MS8 LT6100DD8	 ●	 9.95 9.94 9.90		 10.05 10.06 10.10	 V/V V/V V/V
		V_S = 48V, V_{SENSE} = 50mV to 80mV, A_V = 10V/V	●	9.90		10.10	V/V
	Output Voltage Gain Error (Note 7)	V_{SENSE} = 50mV to 80mV, AV = 10, 12.5, 20, 25, 40, 50V/V LT6100MS8 LT6100DD8	 ●	 –0.5 –0.6 –1.0		 0.5 0.6 1.0	 % % %
		V_S = 48V, V_{SENSE} = 50mV to 80mV, A_V = 10, 12.5, 20, 25, 40, 50V/V	●	–1.0		1.0	%
V_S CMRR	V_S Sense Input Common Mode Rejection Ratio	V_{SENSE} = 50mV, V_{CC} = 2.7V, V_S = 4.1V to 36V	 ●	105 100	120 120		dB dB
V_{CC} PSRR	V_{CC} Supply Rejection Ratio	V_{SENSE} = 50mV, V_S = 36V, V_{CC} = 3V to 30V	 ●	105 95	120 120		dB dB
V_{CC}	Supply Voltage V_{CC}		●	2.7		36	V
BW	Bandwidth	A_V = 10V/V, f_O = –3dB, V_{CC} = 15V A_V = 50V/V, f_O = –3dB, V_{CC} = 15V		100 20	150 50		kHz kHz
t_S	Output Settling to 1% Final Value	V_{SENSE} = 10mV to 100mV			15		µs
$I_S^+{}_{(O)}$, $I_S^-{}_{(O)}$	Sense Input Current	V_{SENSE} = 0V	●		4.5	10	µA
$I_{CC(O)}$	Supply Current	V_{SENSE} = 0V	●		60	170	µA
SR	Slew Rate (Note 8)	V_{CC} = 15V, V_{SENSE} = 26mV to 380mV, A_V = 50V/V	 ●	0.03 0.02	0.05 0.05		V/µs V/µs
I_{SC}	Short-Circuit Current	I_{SC}^+, I_{SC}^-		8	15		mA
	Reverse V_S Supply	$I_{S(TOTAL)}$ = –200µA, V_{CC} = Open	●	50	60		V
$V_{O(MIN)}$	Minimum Output Voltage	V_{SENSE} = 0V, No Load V_{SENSE} = V_S^+ – V_S^- = –100mV, A_V = 50V/V, No Load	●		15 15	35 25	mV mV
$V_{O(MAX)}$	Output High (Referred to V_{CC})	A_V = 50V/V, V_{SENSE} = 100mV, I_L = 0 V_{SENSE} = 100mV, I_L = 100µA V_{SENSE} = 100mV, I_L = 500µA V_{SENSE} = 100mV, I_L = 1mA	● ● ● ●		75 85 125 175	140 160 250 400	mV mV mV mV
I_S^+, I_S^- (Off)	Sense Input Current (Power Down)	V_{CC} = 0V, V_S = 48V, V_{SENSE} = 0V	●		0.001	1	µA

ELECTRICAL CHARACTERISTICS

Note 1: Stresses beyond those listed under Absolute Maximum Ratings may cause permanent damage to the device. Exposure to any Absolute Maximum Rating condition for extended periods may affect device reliability and lifetime.

Note 2: ESD (Electrostatic Discharge) sensitive devices. Extensive use of ESD protection devices are used internal to the LT6100, however, high electrostatic discharge can damage or degrade the device. Use proper ESD handling precautions.

Note 3: A heat sink may be required to keep the junction temperature below absolute maximum ratings.

Note 4: The LT6100C/LT6100I are guaranteed functional over the operating temperature range of –40°C to 85°C. The LT6100H is guaranteed functional over the operating temperature range of –40°C to 125°C.

Note 5: The LT6100C is guaranteed to meet specified performance from 0°C to 70°C. The LT6100C is designed, characterized and expected to meet specified performance from –40°C to 85°C but is not tested or QA sampled at these temperatures. The LT6100I is guaranteed to meet specified performance from –40°C to 85°C. The LT6100H is guaranteed to meet specified performance from –40°C to 125°C.

Note 6: This parameter is not 100% tested.

Note 7: Gain error for A_V = 12.5, 25V/V is guaranteed by the other gain error tests.

Note 8: Slew rate is measured on the output between 3.5V and 13.5V.

TYPICAL PERFORMANCE CHARACTERISTICS

Input Offset Voltage vs Temperature

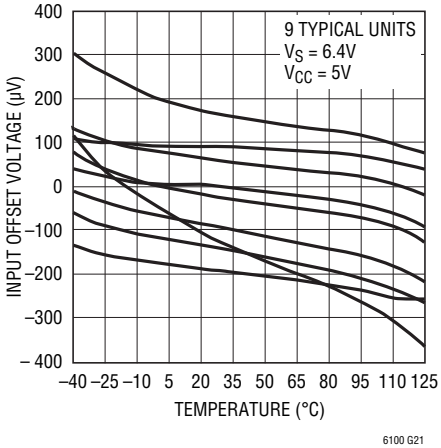

Input Offset Voltage vs V_S^+ Input Voltage

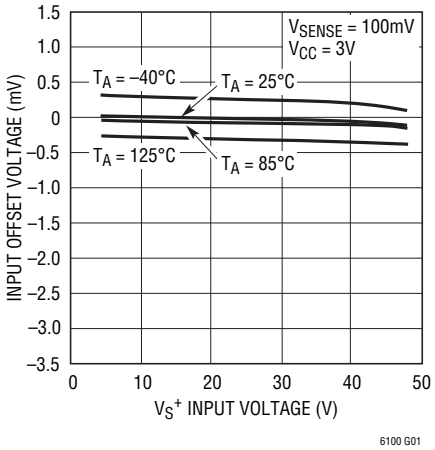

Input Offset Voltage vs V_{CC} Supply Voltage

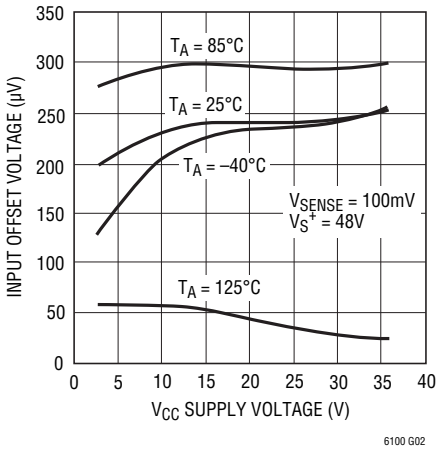

Output Voltage vs Sense Voltage

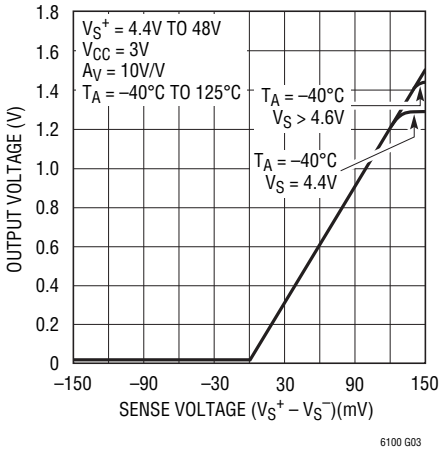

Output Voltage vs Sense Voltage

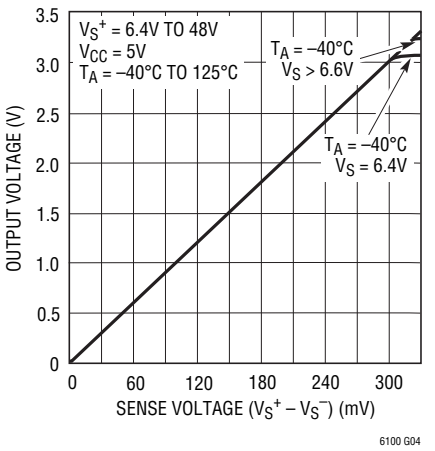

Gain vs Temperature

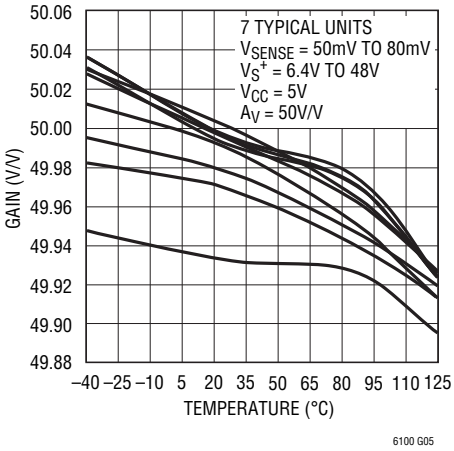

TYPICAL PERFORMANCE CHARACTERISTICS

Negative Sense Input Current vs Sense Voltage

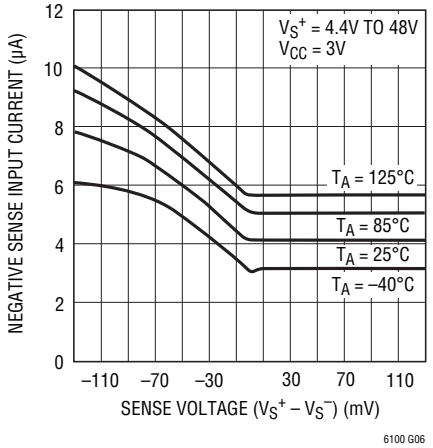

Positive Sense Input Current vs Sense Voltage

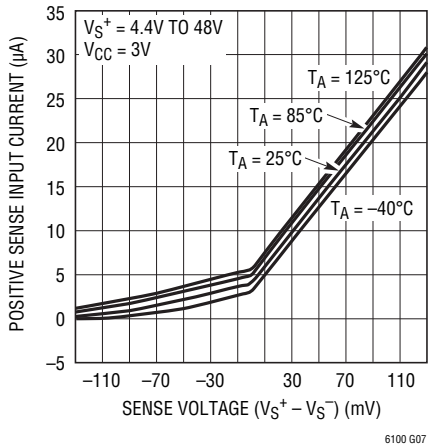

Output Positive Swing vs Load Current

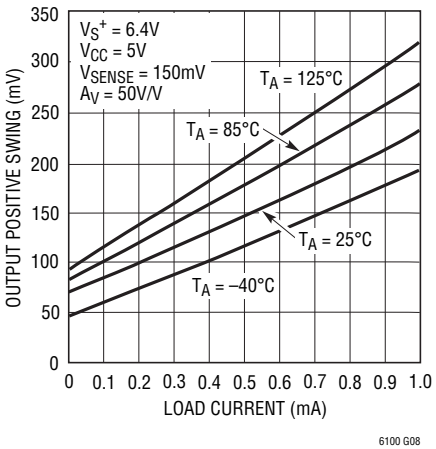

V_{CC} Supply Current vs V_S Input Voltage

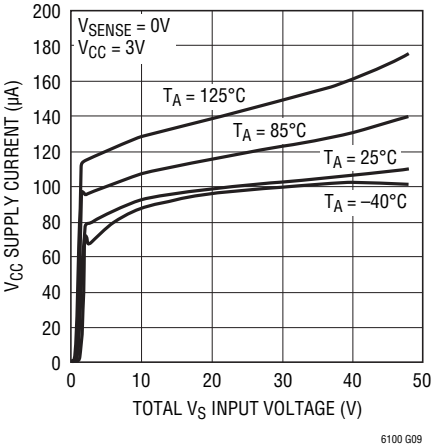

Op Amp Output Impedance vs Frequency

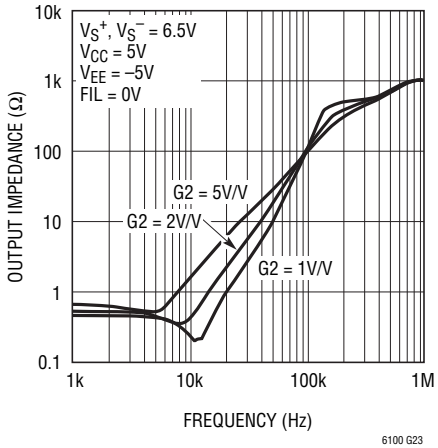

Gain vs Frequency

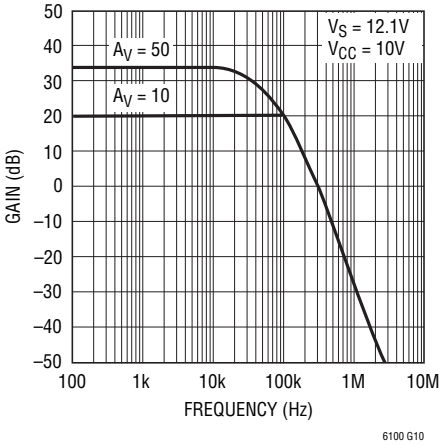

CMRR vs Frequency

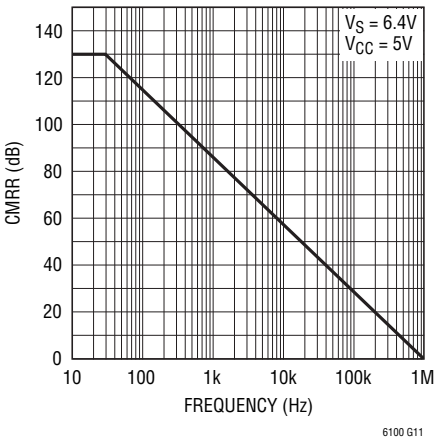

V_{CC} PSRR vs Frequency

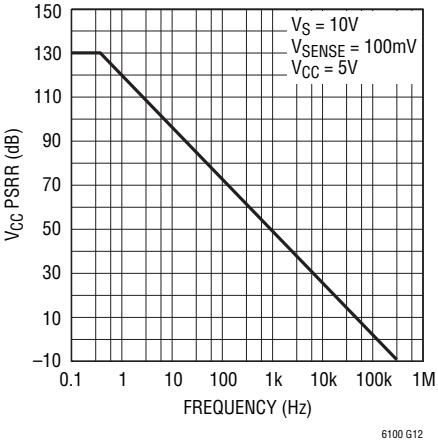

Gain Error vs V_{SENSE}

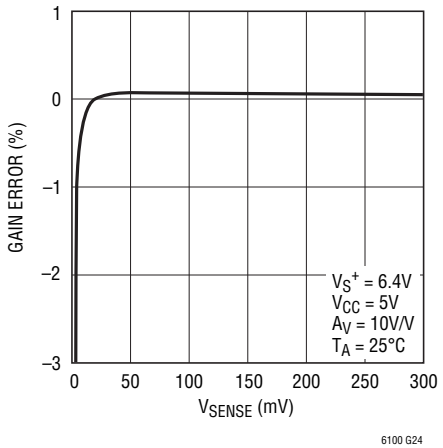

TYPICAL PERFORMANCE CHARACTERISTICS

Sense Input Current (V_{CC} Powered Down) vs V_S^+

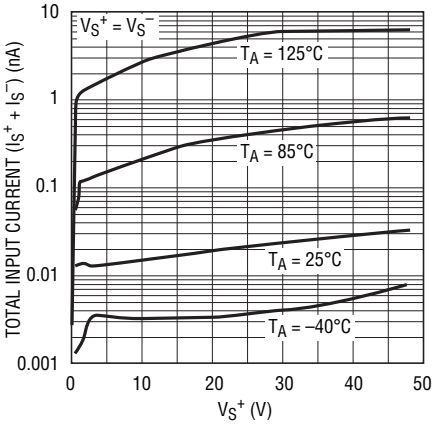

6100 G25

Step Response at V_{SENSE} = 0V to 130mV

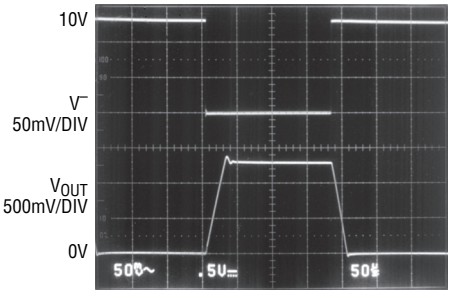

V_S^+ = 10V 50µs/DIV
A_V = 10V/V
C_L = 0pF

6100 G13

Step Response at V_{SENSE} = 0V to 130mV

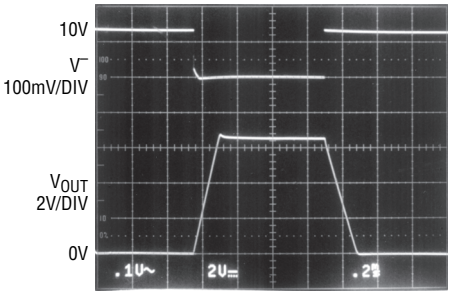

V_S^+ = 10V 0.2ms/DIV
A_V = 50V/V
C_L = 0pF

6100 G14

Step Response at V_{SENSE} = 0V to 10mV

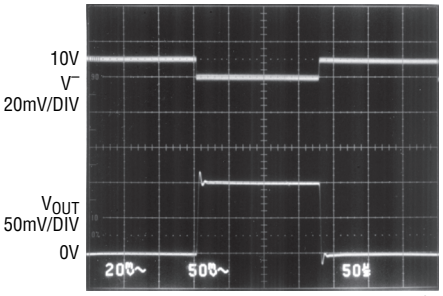

V_S^+ = 10V 50µs/DIV
A_V = 10V/V
C_{OUT} = 0pF

6100 G15

Step Response at V_{SENSE} = 0V to 10mV

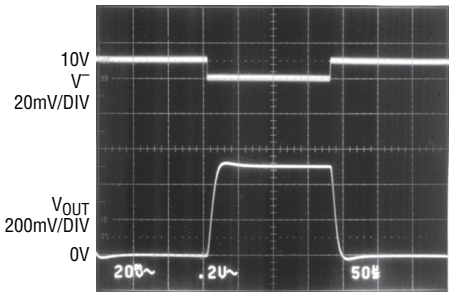

V_S^+ = 10V 50µs/DIV
A_V = 50V/V
C_L = 0pF

6100 G16

Step Response at V_{SENSE} = 0V to 130mV

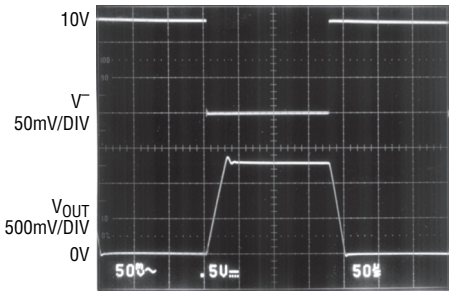

V_S^+ = 10V 50µs/DIV
A_V = 10V/V
C_{OUT} = 1000pF

6100 G17

Step Response at V_{SENSE} = 0V to 130mV

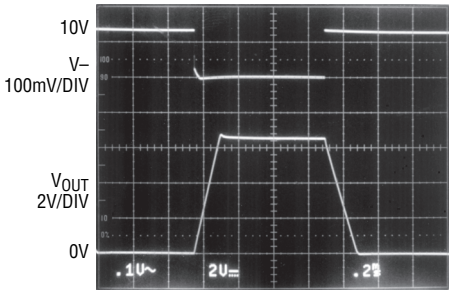

V_S^+ = 10V 0.2ms/DIV
A_V = 50V/V
C_L = 1000pF

6100 G18

Step Response at V_{SENSE} = 0V to 10mV

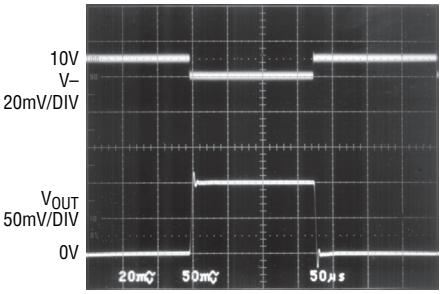

V_S^+ = 10V 50µs/DIV
A_V = 10V/V
C_L = 1000pF

6100 G19

TYPICAL PERFORMANCE CHARACTERISTICS

Step Response at V_{SENSE} = 0V to 10mV

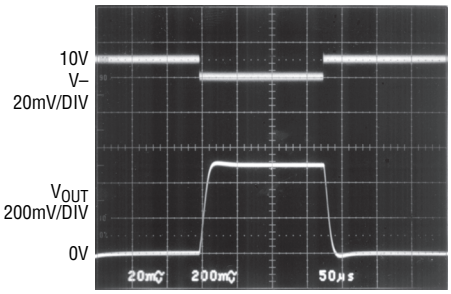

V_S^+ = 10V
A_V = 50V/V
C_L = 1000pF
50µs/DIV

Start-Up Delay

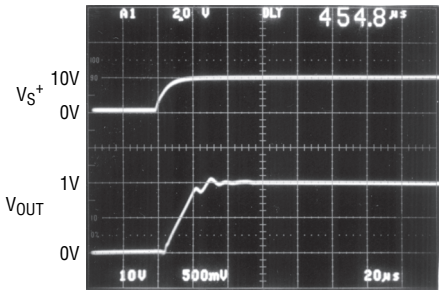

V_{CC} = 5V
V_{SENSE} = 100mV
A_V = 10V/V
V_{EE} = 0V
20µs/DIV

PIN FUNCTIONS

V_S^- (Pin 1): Negative Sense Input Terminal. Negative sense voltage input will remain functional for voltages up to 48V. V_S^- is connected to an internal gain-setting resistor R_{G1} = 5k.

V_{CC} (Pin 2): Supply Voltage Input. This power supply pin supplies current to both current sense amplifier and op amp.

FIL (Pin 3): Filter Pin. Connects to an external capacitor to roll off differential noise of the system. Pole frequency $f_{-3dB} = 1/(2\pi R_{FIL}C)$, $R_{FIL} = R_E + R_O$ = 60k.

V_{EE} (Pin 4): Negative Supply or Ground for Single Supply Operation.

V_{OUT} (Pin 5): Voltage Output Proportional to the Magnitude of the Current Flowing Through R_{SENSE}:

$$V_{OUT} = A_V \bullet (V_{SENSE} \pm V_{OS})$$

V_{OS} is the input offset voltage. A_V is the total gain of the LT6100.

A2 (Pin 6): Gain Select Pin. Refer to Table 1.

A4 (Pin 7): Gain Select Pin. When Pin 7 is shorted to V_{EE}, the total gain is 40V/V. When both Pin 6 and Pin 7 are shorted to V_{EE}, the total gain is 50V/V. When both Pin 6 and Pin 7 are opened, the total gain is 10V/V.

V_S^+ (Pin 8): Positive Sense Input Terminal. Connecting a supply to V_S^+ and a load to V_S^- will allow the LT6100 to monitor the current through R_{SENSE}, refer to Figure 1. V_S^+ is connected to an internal gain setting resistor R_{G2} = 5k. V_S^+ remains functional for voltages up to 48V.

FUNCTIONAL DIAGRAM

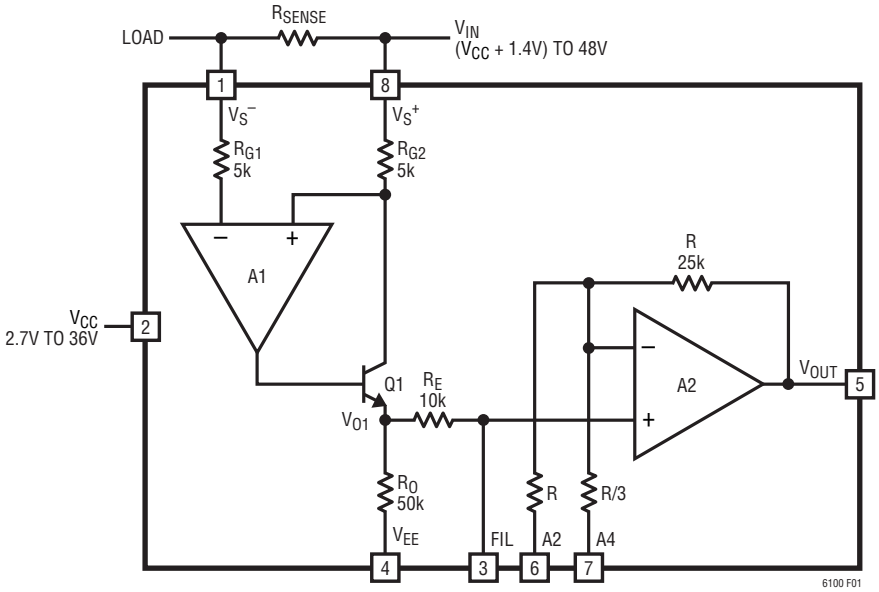

Figure 1. Functional Diagram

APPLICATIONS INFORMATION

The LT6100 high side current sense amplifier (Figure 1) provides accurate unidirectional monitoring of current through a user-selected sense resistor. The LT6100 features a fully specified 4.1V to 48V input common mode range. A high PSRR V_{CC} supply (2.7V to 36V) powers the current sense amplifier and the internal op amp circuitry. The input sense voltage is level shifted from the positive sense power supply to the ground reference and amplified by a user-selected gain to the output. The buffered output voltage is directly proportional to the current flowing through the sense resistor.

Theory of Operation (Refer to Figure 1)

Current from the source at V_S^+ flows through R_{SENSE} to the load at V_S^-, creating a sense voltage, V_{SENSE}. Inputs V_S^+ and V_S^- apply the sense voltage to R_{G2}. The opposite ends of resistors R_{G1} and R_{G2} are forced to be at equal potentials by the voltage gain of amplifier A1. The current through R_{G2} is forced to flow through transistor Q1 and is sourced to node V_{O1}. The current from R_{G2} flowing through resistor R_O gives a voltage gain of ten, $V_{O1}/V_{SENSE} = R_O/R_{G2} = 10V/V$. The sense amplifier output at V_{O1} is amplified again by amplifier A2. The inputs of amplifier A2 can operate to ground which ensures that small sense voltage signals are detected. Amplifier A2 can be programmed to different gains via Pin 6 and Pin 7. Thus, the total gain of the system becomes $A_V = 10 \bullet A2$ and $V_{OUT} = V_{SENSE} \bullet A_V$.

Gain Setting

The LT6100 gain is set by strapping (or floating) the two gain pins (see Table 1). This feature allows the user to "zoom in" by increasing the gain for accurate measurement of low currents.

$A_V = 10V/V \bullet G2$, G2 is the gain of op amp A2.

Table 1. Gain Set with Pin 6 and Pin 7

A2 (PIN 6)	A4 (PIN 7)	G2	A_V
Open	Open	1	10
V_{EE}	Out	1.25	12.5
V_{EE}	Open	2	20
Out	V_{EE}	2.5	25
Open	V_{EE}	4	40
V_{EE}	V_{EE}	5	50

Selection of External Current Sense Resistor

External R_{SENSE} resistor selection is a delicate trade-off between power dissipation in the resistor and current measurement accuracy. The maximum sense voltage may be as large as ±300mV to get maximum dynamic range. For high current applications, the user may want to minimize the sense voltage to minimize the power dissipation in the sense resistor. The LT6100's low input offset voltage of 80µV allows for high resolution of low sense voltages. This allows limiting the maximum sense voltage while still providing high resolution current monitoring.

Kelvin connection of the LT6100's V_S^+ and V_S^- inputs to the sense resistor should be used to provide the highest accuracy in high current applications. Solder connections and PC board interconnect resistance (approximately 0.5mΩ per square) can be a large error in high current systems. A 5A application might choose a 20mΩ sense resistor to give a 100mV full-scale input to the LT6100. Input offset voltage will limit resolution to 4mA. Neglecting contact resistance at solder joints, even one square of PC board copper at each resistor end will cause an error of 5%. This error will grow proportionately higher as monitored current levels rise.

APPLICATIONS INFORMATION

Noise Filtering

The LT6100 provides signal filtering via pin FIL that is internally connected to the resistors R_E and R_O. This pin may be used to filter the input signal entering the LT6100's internal op amp, and should be used when fast ripple current or transients flow through the sense resistor. High frequency signals above the 300kHz bandwidth of the LT6100's internal amplifier will cause errors. A capacitor connected between FIL and V_{EE} creates a single pole low pass filter with corner frequency:

$$f_{-3dB} = 1/(2\pi R_{FIL}C)$$

where R_{FIL} = 60k. A 220pF capacitor creates a pole at 12kHz, a good choice for many applications.

Output Signal Range

The LT6100's output signal is developed by current through R_{G2} into output resistor R_O. The current is V_{SENSE}/R_{G2}. The sense amplifier output, V_{O1}, is buffered by the internal op amp so that connecting the output pins to other systems will preserve signal accuracy. For zero V_{SENSE}, internal circuit saturation with loss of accuracy occurs at the minimum V_{OUT} swing, 15mV above V_{EE}. V_{OUT} may swing positive to within 75mV of V_{CC} or a maximum of 36V, a limit set by internal junction breakdown. Within these constraints, an amplified, level shifted representation of the R_{SENSE} voltage is developed at V_{OUT}. The output is well behaved driving capacitive loads to 1000pF.

Sense Input Signal Range

The LT6100 has high CMRR over the wide input voltage range of 4.1V to 48V. The minimum operation voltage of the sense amplifier input is 1.4V above V_{CC}. The output remains accurate even when the sense inputs are driven to 48V. Figure 2 shows that V_{OS} changes very slightly over a wide input range. Furthermore, the sense inputs V_S^+ and V_S^- can collapse to zero volts without incurring any damage to the device. The LT6100 can handle differential sense voltages up to the voltage of the sense inputs supplies. For example, V_S^+ = 48V and V_S^- = 0V can be a valid condition in a current monitoring application (Figure 3) when an overload protection fuse is blown and V_S^- voltage collapses to ground. Under this condition, the output of the LT6100 goes to the positive rail, V_{OH}. There is no phase inversion to cause an erroneous output signal. For the opposite case when V_S^+ collapse to ground with V_S^- held up at some higher voltage potential, the output will sit at V_{OL}. If both inputs fall below the minimum CM voltage, V_{CC} + 1.4V, the output is indeterminate but the LT6100 will not be damaged.

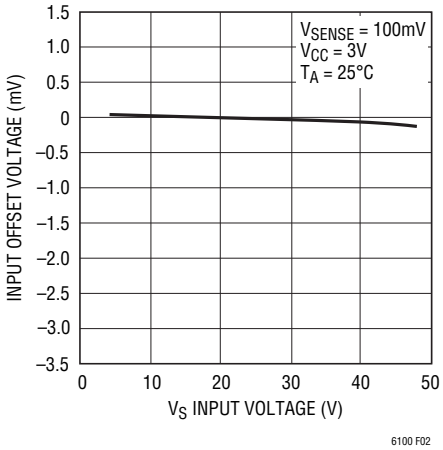

Figure 2. V_{OS} vs V_S Input Voltage

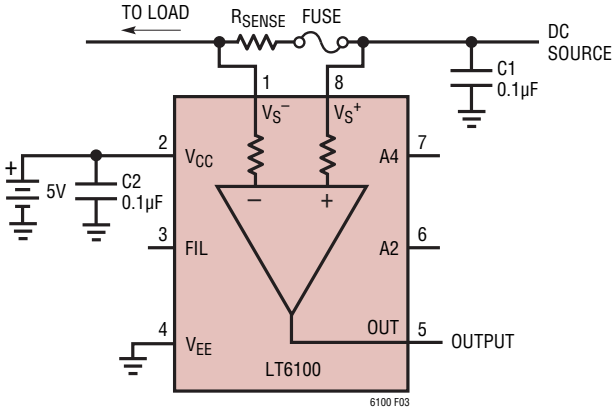

Figure 3. Current Monitoring of a Fuse Protected Circuit

APPLICATIONS INFORMATION

Low Sense Voltage Operation

Figure 4 shows the simplest circuit configuration in which the LT6100 may be used. While V_{OUT} (output voltage) increases with positive sense current, at V_{SENSE} = 0V, the LT6100's buffered output can only swing as low as V_{OL} = 15mV. The accuracy at small sense voltages can be improved by selecting higher gain. When gain of 50V/V is selected, as shown in Figure 7, V_{OUT} leaves the clipped region for a positive V_{SENSE} greater than 1mV compared to 2.5mV for gain of 10V/V (see Figure 6).

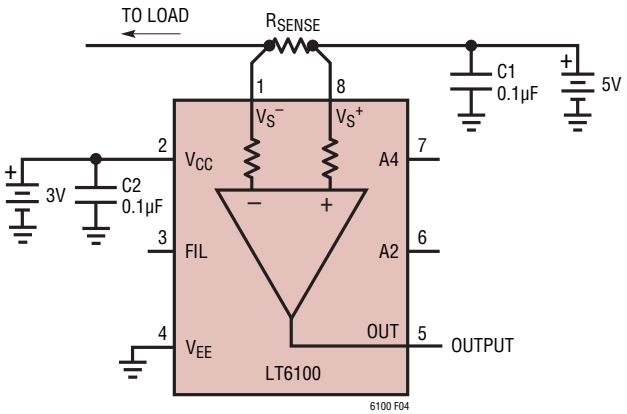

Figure 4. LT6100 Load Current Monitor

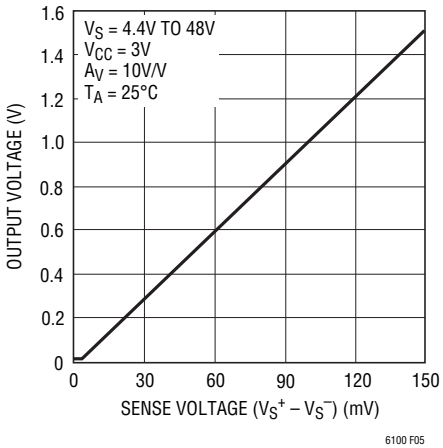

Figure 5. Output Voltage vs V_{SENSE}

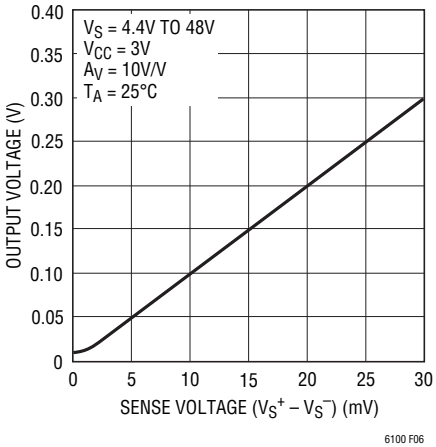

Figure 6. Expanded View of Output Voltage vs V_{SENSE}, A_V = 10V/V

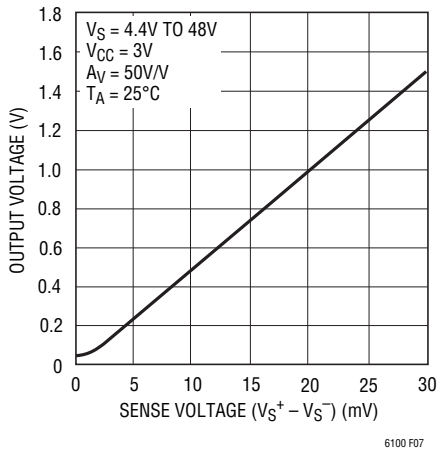

Figure 7. Expanded View of Output Voltage vs V_{SENSE}, A_V = 50V/V

APPLICATIONS INFORMATION

Power Down While Connected to a Battery

Another unique benefit of the LT6100 is that you can leave it connected to a battery even when it is denied power. When the LT6100 loses power or is intentionally powered down, its inputs remain high impedance (see Figure 8). This is due to the implementation of Linear Technology's Over-The-Top® input topology at its front end. When powered down, the LT6100 inputs draw less than 1µA of current.

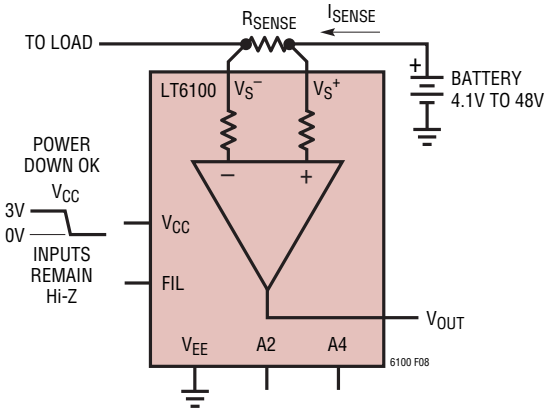

Figure 8. Input Remains Hi-Z when LT6100 is Powered Down

TYPICAL APPLICATION

Adjust Gain Dynamically for Enhanced Range

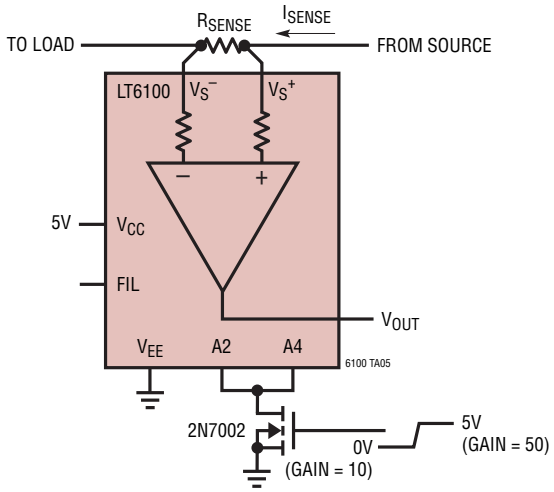

Micro-Hotplate Voltage and Current Monitor

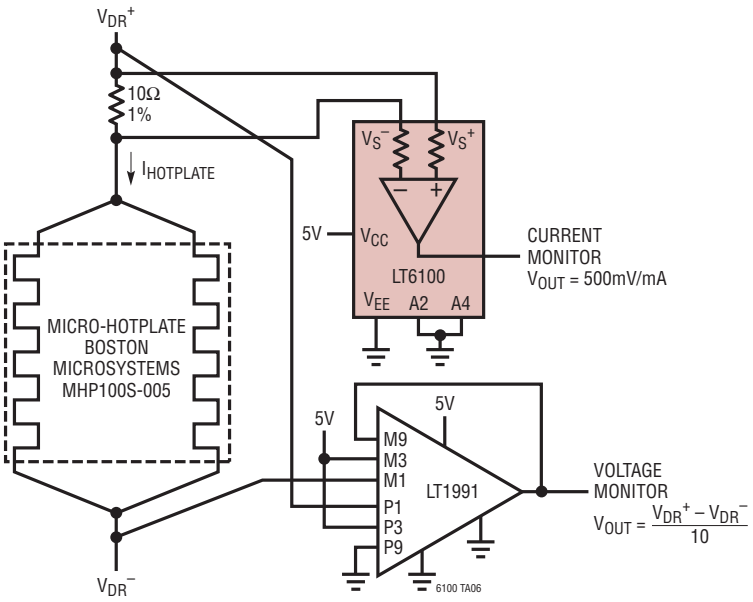

www.bostonmicrosystems.com

PACKAGE DESCRIPTION

Please refer to http://www.linear.com/designtools/packaging/ for the most recent package drawings.

DD Package
8-Lead Plastic DFN (3mm × 3mm)
(Reference LTC DWG # 05-08-1698 Rev C)

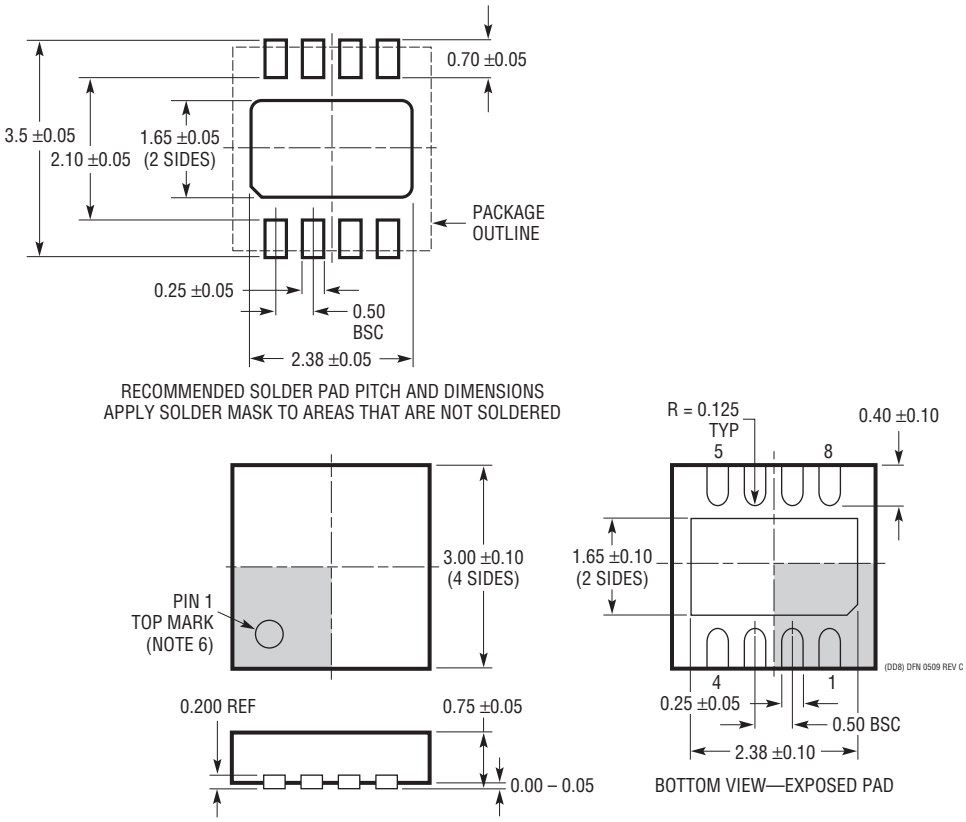

NOTE:
1. DRAWING TO BE MADE A JEDEC PACKAGE OUTLINE M0-229 VARIATION OF (WEED-1)
2. DRAWING NOT TO SCALE
3. ALL DIMENSIONS ARE IN MILLIMETERS
4. DIMENSIONS OF EXPOSED PAD ON BOTTOM OF PACKAGE DO NOT INCLUDE MOLD FLASH. MOLD FLASH, IF PRESENT, SHALL NOT EXCEED 0.15mm ON ANY SIDE
5. EXPOSED PAD SHALL BE SOLDER PLATED
6. SHADED AREA IS ONLY A REFERENCE FOR PIN 1 LOCATION ON TOP AND BOTTOM OF PACKAGE

PACKAGE DESCRIPTION

Please refer to http://www.linear.com/designtools/packaging/ for the most recent package drawings.

MS8 Package
8-Lead Plastic MSOP
(Reference LTC DWG # 05-08-1660 Rev G)

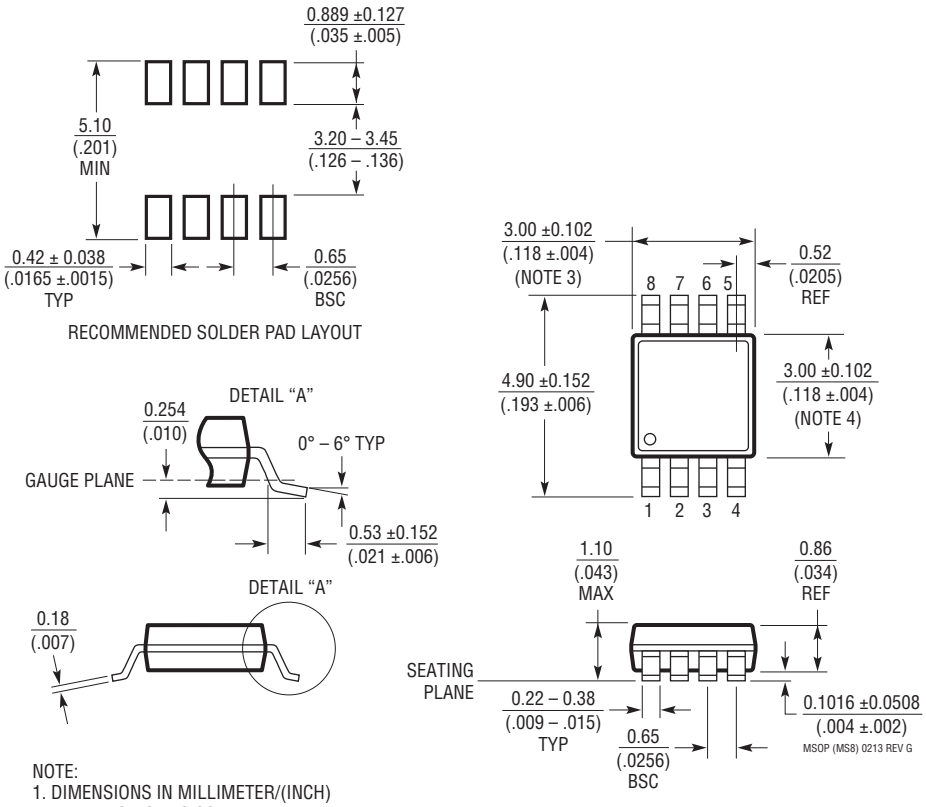

NOTE:
1. DIMENSIONS IN MILLIMETER/(INCH)
2. DRAWING NOT TO SCALE
3. DIMENSION DOES NOT INCLUDE MOLD FLASH, PROTRUSIONS OR GATE BURRS.
   MOLD FLASH, PROTRUSIONS OR GATE BURRS SHALL NOT EXCEED 0.152mm (.006") PER SIDE
4. DIMENSION DOES NOT INCLUDE INTERLEAD FLASH OR PROTRUSIONS.
   INTERLEAD FLASH OR PROTRUSIONS SHALL NOT EXCEED 0.152mm (.006") PER SIDE
5. LEAD COPLANARITY (BOTTOM OF LEADS AFTER FORMING) SHALL BE 0.102mm (.004") MAX

REVISION HISTORY (Revision history begins at Rev C)

REV	DATE	DESCRIPTION	PAGE NUMBER
C	11/12	Corrected value in Output Signal Range section.	11
D	07/14	Corrected part numbers in Order Information	2
		Corrected Specified Temperature Range for LT6100C	2
		Updated format of Order Information	2
		Added web links	All

Information furnished by Linear Technology Corporation is believed to be accurate and reliable. However, no responsibility is assumed for its use. Linear Technology Corporation makes no representation that the interconnection of its circuits as described herein will not infringe on existing patent rights.

TYPICAL APPLICATIONS

800mA/1A White LED Current Regulator

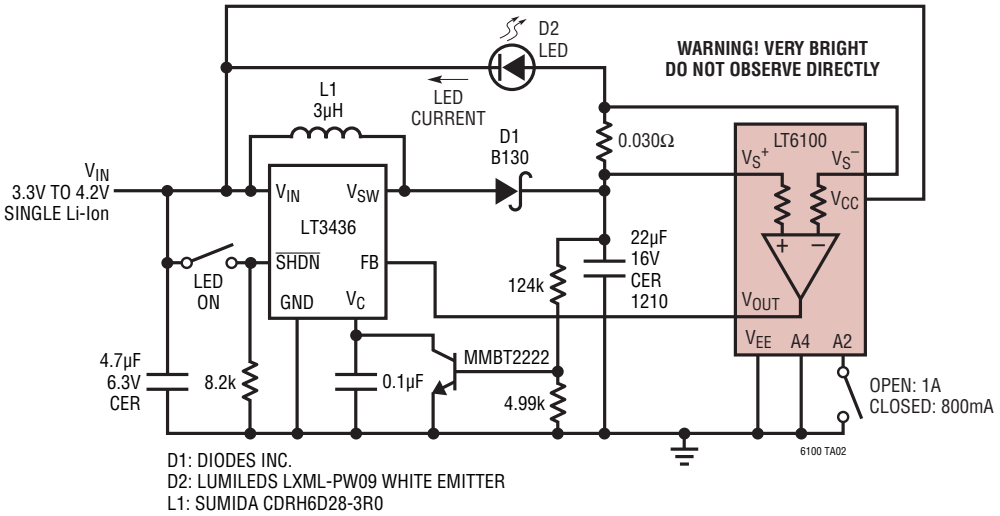

Filtered Gain of 20 Current Sense

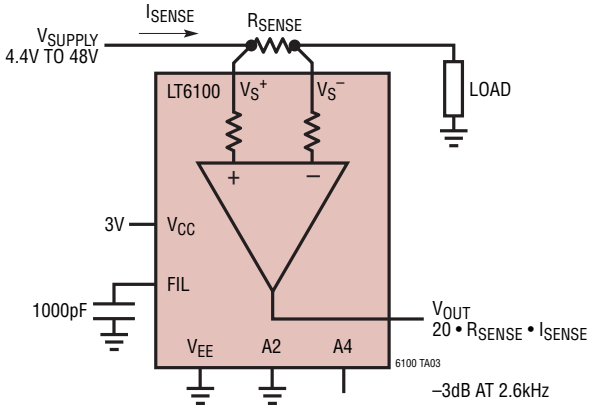

Gain of 50 Current Sense

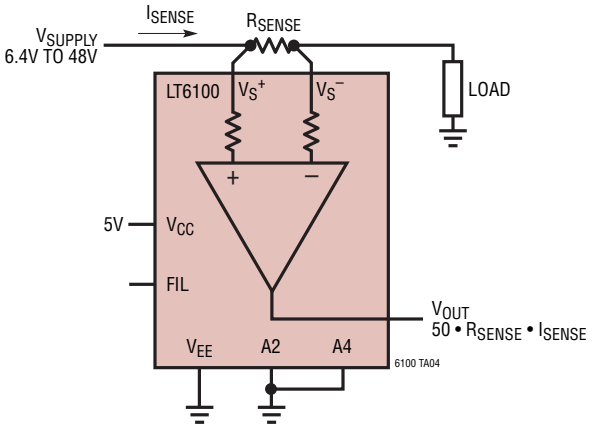

RELATED PARTS

PART NUMBER	DESCRIPTION	COMMENTS
LTC®1043	Dual Precision Instrumentation Switched Capacitor Building Block	120dB CMRR, 3V to 18V Operation
LT1490/LT1491	Dual and Quad Micropower Rail-to-Rail Input and Output Op Amps	50µA Amplifier, 2.7V to 40V Operation, Over-The-Top Inputs
LT1620/LT1621	Rail-to-Rail Current Sense Amplifiers	Accurate Output Current Programming, Battery Charging to 32V
LT1787	Precision Bidirectional, High Side Current Sense Amplifier	75µV V_{OS}, 60V, 60µA Operation
LTC6101/LTC6101HV	High Voltage, High Side, Precision Current Sense Amplifiers	4V to 60V/5V to 100V, Gain Configurable, SOT-23

Linear Technology Corporation
1630 McCarthy Blvd., Milpitas, CA 95035-7417
(408) 432-1900 • FAX: (408) 434-0507 • www.linear.com/LT6100

LT 0714 REV D • PRINTED IN USA

© LINEAR TECHNOLOGY CORPORATION 2005