Jan.1.2021 Copyright 2021 HIROSE ELECTRIC CO., LTD. All Rights Reserved.
In case of consideration for using Automotive equipment / device which demand high reliability, kindly contact our sales window correspondents.

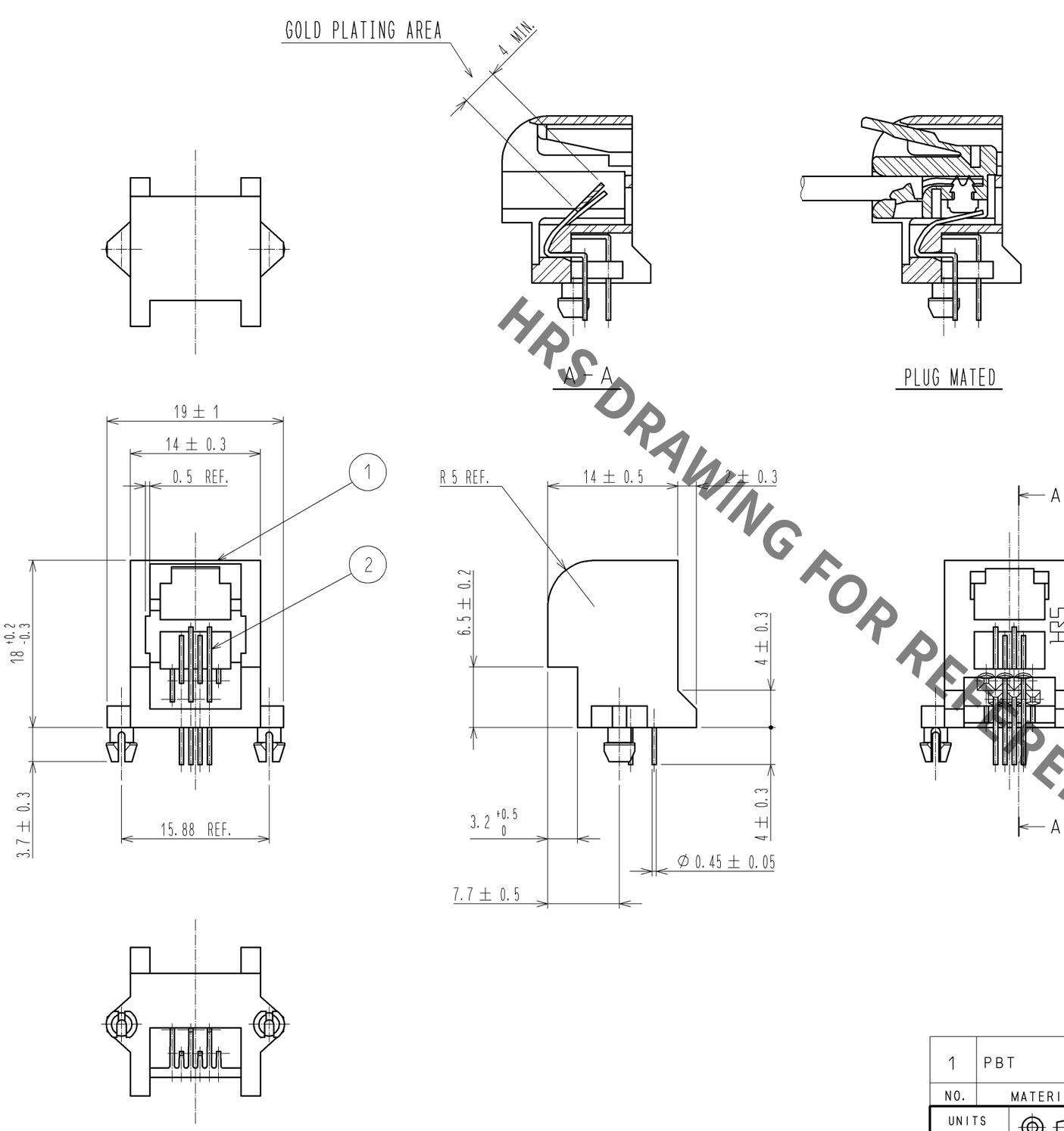

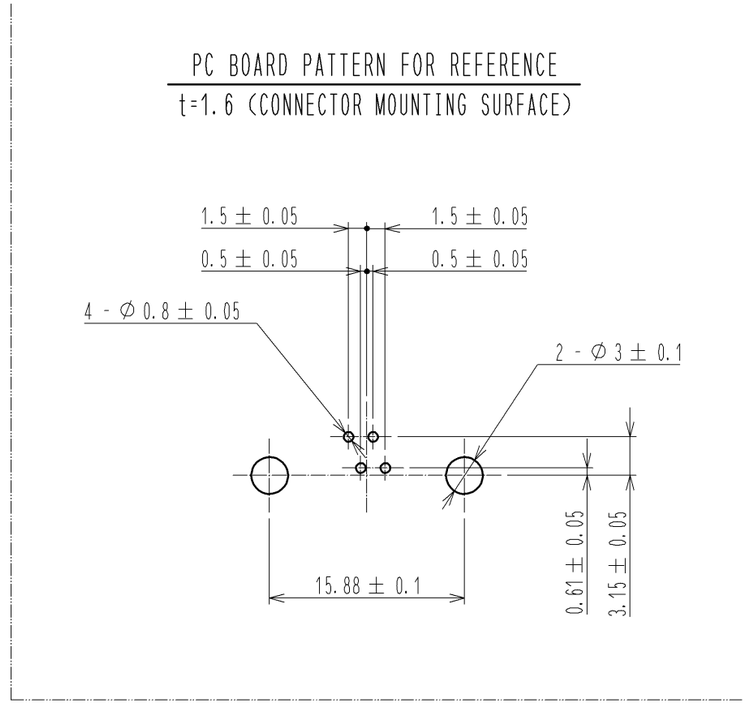

HRS DRAWING FOR REFERENCE

NO.	MATERIAL	FINISH , REMARKS	NO.	MATERIAL	FINISH , REMARKS
1	PBT	UL94V-0 (VANILLA WHITE)	2	PHOSPHOR BRONZE	CONTACT: GOLD PLATING 1.27 μm min LEAD : GOLD PLATING 0.03 μm min UNDER : NICKEL PLATING 1.27 μm min

UNITS	SCALE	COUNT	DESCRIPTION OF REVISIONS	DESIGNED	CHECKED	DATE
mm	2 : 1					

HIROSE ELECTRIC CO., LTD.

APPROVED	: YH. ENAMI	10. 02. 08	DRAWING NO.	EDC3-009185-01
CHECKED	: YH. ENAMI	10. 02. 08	PART NO.	TM5RA-64(50)
DESIGNED	: KI. NAGANUMA	10. 02. 08	CODE NO.	CL222-0104-0-50
DRAWN	: KK. TOKUNAGA	10. 02. 08		1/1

FORM HC0011-5-7